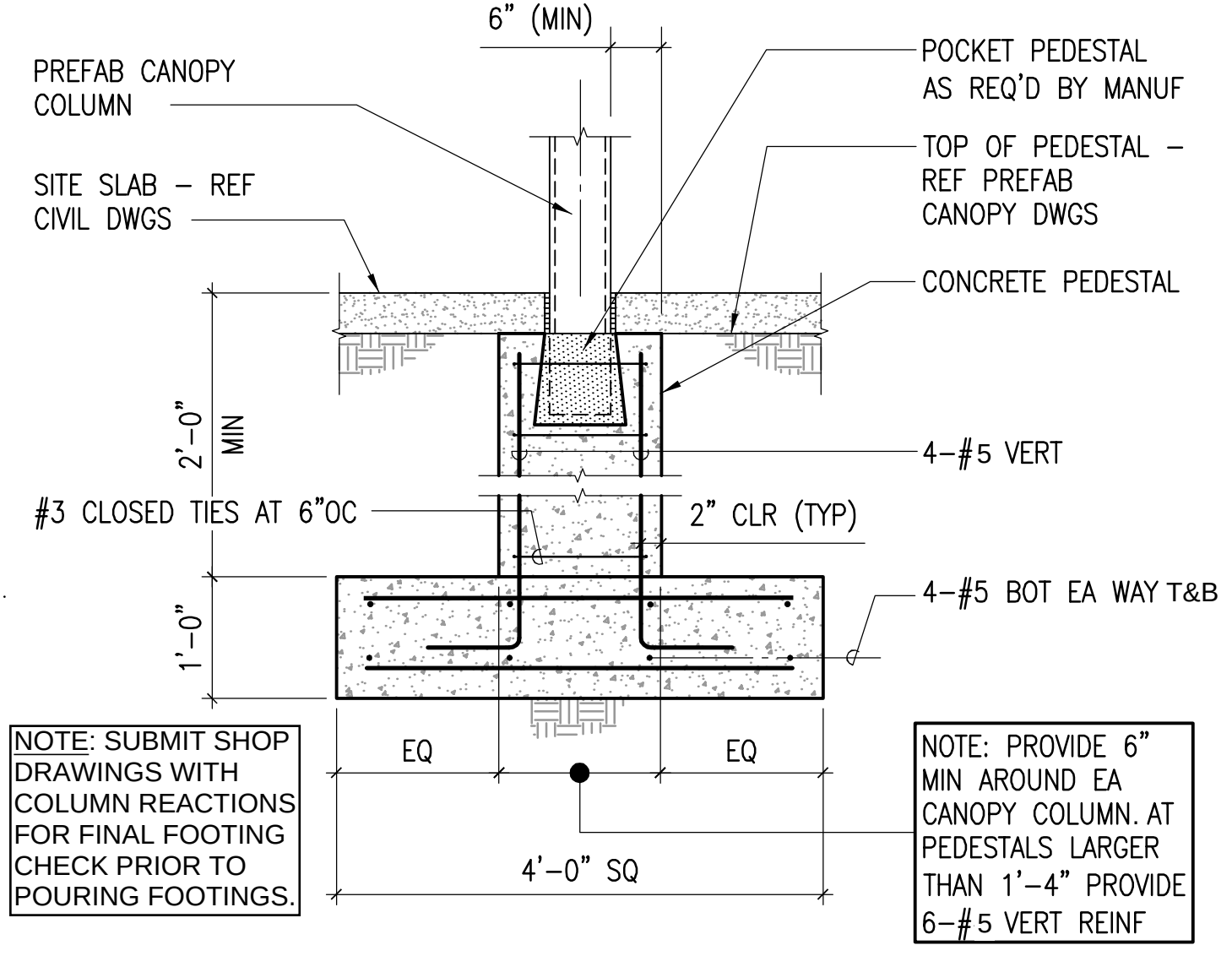

TYPICAL PREFABRICATED CANOPY COLUMN FOOTING DETAIL

NTS

(NON-CANTILEVERED FRAMES)