I. GENERAL

A. CONSTRUCTION

1. Construction shall be in accordance with all applicable Federal, State of North Carolina, and City of Wilmington codes and ordinances (2018 North Carolina Building Code) including fire codes.
2. This structure is classified as an open parking structure, occupancy Group S-2, and as construction Type IB, Unprotected, Non-Combustible.
3. Contractor shall check all plans, sections, and details drawn on Structural Drawings for compatibility with Architectural Drawings. Structural Drawings show only structural elements of parking structure. Discrepancies, if any, shall be reported to Engineer for clarification or adjustments before proceeding with work.

B. DESIGN LOADS (All loads are service loads unless noted)

Description		Load
1. Dead Loads		
a. Floor system and framing		Self-Weight
b. Mechanical, Electrical, Plumbing		3 psf
2. Live Loads		
a. Roof (Stair / Elevator Towers)		20 psf
b. Supported parking and drive areas	Tees, Beams	40 psf unreduced
	Columns	32 psf reduced
c. Concentrated wheel load (on 4.5" x 4.5" area)		3,000 lbs
d. Bumper impact, on 1-ft sq, 18" & 27" (not concurrently) above finished floor		6,000 lbs
e. Slabs on grade		40 psf
f. Stairs, landings, and lobbies		100 psf
g. Elevator mechanical room		100 psf
3. Snow loads		
a. Ground snow load (P_g)		10 psf
b. Flat roof snow load (P_f)		8.4 psf
c. Minimum Snow load ($P_{f,min}$)		10 psf
d. Snow exposure factor (C_e)		1.0
e. Snow load importance factor (I_S)		1.0
f. Roof thermal factor (C_t)		1.2
g. Rain-On-Snow surcharge		5 psf
4. Wind Design Criteria		
a. Basic wind speed (3-second gust)		150 mph (ultimate)
b. Wind load importance factor(I_W)		1.0
c. Wind exposure		B
d. Internal pressure coefficient		±0.18
e. Components and cladding		See Specifications
5. Seismic Design Criteria		
a. Seismic importance factor (I_E)		1.0
b. Spectral response acceleration for short period (S_S)		0.213g
c. Spectral response acceleration for 1-second period (S_1)		0.090g
d. Site class		D
e. Design spectral response acceleration for short period (S_{DS})		0.228g
f. Design spectral response acceleration for 1-second period (S_{D1})		0.144g
g. Seismic design category		C
h. Resisting system in east-west direction		
1. Basic structural system		A.5) Building System - Intermediate Precast Shear Walls
2. Design base shear (V)		1930k ultimate
3. Seismic response coefficient (C_S)		0.058
4. Response modification factor (R)		4
5. Deflection amplification factor (C_d)		4
6. Analysis procedure		Equivalent Lateral Force
i. Resisting System in north-south direction		
1. Basic structural system		A.5) Bearing Wall System - Intermediate Precast Shear Walls
2. Design base shear (V)		1930k ultimate
3. Seismic response coefficient (C_S)		0.058
4. Response modification factor (R)		4
5. Deflection amplification factor (C_d)		4
6. Analysis procedure		Equivalent Lateral Force
6. Thermal & Volume Change Design Criteria: Per PCI Design Handbook (7th Edition)		
a. Design temperature differential		50° F
b. Annual average ambient relative humidity		80%

C. MISCELLANEOUS

1. Fire ratings, conforming to MNL-124-89 and STM E119 are as follows: OR one hour.

Structural Element	Hours Provided	Hours Required
a. Precast concrete tees or hollow core units	1	1
b. Precast Concrete beams	1	1
c. Concrete columns	2	2
d. Concrete walls	2	2
e. Stair/ elevator towers	2	2
f. Bridges	2	2

2. Future Expansion
   a. This parking facility is not designed for future expansion.
3. Existing Construction
   a. Field verify all existing elevations, dimensions, and conditions shown on drawings before any material fabrication and erection or concrete placement for new construction. Immediately report all discrepancies to Engineer.

II. FOUNDATION WORK

A. Foundations, retaining walls, basement walls, foundation drainage and slabs on grade have been designed in accordance with recommendations of ECS Southeast Report Number 22:27313R2, dated February 5, 2019. For more information see sections of Specification Division 31.

B. Foundation Design (assuming rigid inclusions)

Description	Allowable Load	Settlement	Differential Total
1. Spread footings	net 6,000 psf	1 1/2"	1"
2. Strip footing	net 6,000 psf	1 1/2"	1"

C. Retaining Wall Design

1. Design equivalent fluid pressure behind basement type walls laterally supported top and bottom. p= (59 x h + K_o x q**)
2. Design equivalent fluid pressure behind cantilevered retaining walls p= (39 x h + K_a x q**)
3. Coefficient of sliding friction tan (delta) = 0.40

p = pressure (psf); h=height (ft);
K_o = coefficient of at-rest earth pressure = 0.47
K_a = coefficient of active earth pressure = 0.31
q = surcharge (psf)** = 40 psf @ interior, 100 psf @exterior

D. See Specifications Section of Division 31 for excavation, dewatering and compaction.

E. Footings shall be on Rigid Inclusions. Rigid Inclusions shall be a delegated design by the ground improvement subcontractor.

F. Foundation shall extend below finished grade 30" (minimum)

G. Before placement of granular fill below slab-on-grade, entire surface shall be proofrolled and observed by testing agency for soft or unstable material. Remove unacceptable material and replace with approved granular fill. Subgrade shall be compacted to 98% maximum dry density per ASTM D698.

H. Grain drainage layer material shall consist of: Gravel (GP, GW, GP-SM, GW-SM), Sand (SP, SW, SP-SM, SW-SM). Material should have less than 20 percent fines, and can consist of No. 57 stone, No. 67 stone, ABC, or screenings (ACI 302.1R-15). Between the gravel or stone and the subgrade, provide a layer of non-woven geotextile (Mirafi 140N or equivalent).

I. Foundation drains shall be provided behind all retaining walls. The system shall consist of a 4-inch perforated, closed joint drain line surrounded by a minimum of 6 inches of AASHTO Size No. 57 Stone wrapped with non-woven geotextile (Mirafi 140N or equivalent).

III. CONCRETE

A. Material Properties - Concrete:

	F'c psi at 28 day	Max W/C Ratio	Max Slump Inches	Total Air Content (±1.5%)	Max. Nom Aggregate Size
1. Cast-in-place concrete					
a. Footings	4,000	0.45	4	No Test	2"
b. Column piers	5,000	0.45	4	5	3/4"
c. Tee toppings, pour strips	5,000	0.40	3*	7	3/4"
d. Walls	4,000	0.45	3*	5	3/4"
e. Slab on grade	4,000	0.45	4	6	1
f. Stairs, landings, lobbies	4,000	0.45	4	7	3/4"
g. All other	4,000	0.45	4	5	3/4"
2. Precast concrete					
a. Columns	6,000	0.40	**	5 1/2	3/4"
b. Tees	6,000	0.40	**	5 1/2	3/4"
c. Beams	6,000	0.40	**	5 1/2	3/4"
d. Hollow core units	6,000	0.40	**	5 1/2	3/4"
e. Solid slabs	6,000	0.40	**	5 1/2	3/4"
f. Wall panels	6,000	0.40	**	5 1/2	3/4"
3. Other Concrete					
a. Columns base drypack	8,000	N/A	0	No Test	No. 4
b. Hollow core units keyway grout	3,000	N/A	8	6	3/8"
c. Masonry wall grout fill	3,000	N/A	8-10	No Test	3/8"
d. NSNS grout	8,000	N/A	0	No Test	No. 4

*Prior to adding water reducer.
**No slump requirement.

4. For additional information regarding Air Entrainment, see Specification Section 033000.
5. All concrete is Normal Weight 145 pcf.

B. Material Properties - Reinforcing and Connection Steel:

	Fy, psi	ASTM
1. Welded bars	60,000	A615*
OR	60,000	A706
2. All bars, UN	60,000	A615
3. Welded wire reinforcement (smooth)	65,000	A185
4. Prestressing strand	270,000 (fpu)	A416
5. Coil bolts and coil rods	65,000 U.N.	
6. Welding for steel reinf.		AWS D1.4-11
7. Deformed bar anchors	70,000	A496
8. Headed anchor studs	60,000 (fs)	A108
9. Headed/terminator bars	60,000	A970

*with proper reheat per AWS standards.

C. General Notes for Cast-in-Place and Precast Concrete:

1. Column reinforcing shall be continuous, or shall be spliced according to ACI 318-14, Section 25.5.
2. Welded wire reinforcement shall be spliced per ACI 318-14, Section 25.5.4.
3. Provide extra reinforcing around all openings, including door openings: two #5 bars all four sides of each opening and extend 2 feet beyond corners of opening. Add two #5 bars 4 feet long as diagonal bars at each corner.
4. Where shown hooked, provide standard 90 degree bar hooks unless noted.
5. When reinforcement is lap spliced, provide Class B splice typical, unless noted. See details for splice locations.
6. Slab-on-grade reinforcement shall be #3 @ 18 in. o.c., ew, placed 2 in. clear from top of slab.
7. Provide a 3/4 inch chamfer on all exposed corners of concrete. Top edges of walls may be tooled.
8. Provide control/construction joints as shown on Drawings. For more information, see Specification Section 033000.
9. All inserts and coil rods shall be Galvanized. See Specifications Section 033000 for more information.
10. P/C embed shop drawings must be approved and embedded items installed where required prior to placing concrete.
11. Stripping of forms shall be in accordance with Specification Section 033000.

D. Additional Note for Precast Concrete:

1. Parking Structure contract Drawings are based on performance type design for precast superstructure. An integral part of this Project is preparation of final Design Drawings, Design Calculations, and Shop Drawings necessary for fabrication and construction of all precast concrete pieces and required accessories in accordance with all code and design requirements. See Specification Section 034100 for more requirements.
2. Provide all openings, reveals, drips, blockouts, inserts, etc., cast into precast according to Architectural, Mechanical and Electrical Drawings. Coordinate exact sizes and locations with respective Contractor.
3. Provide 2 #4 L bars minimum (3'-0" legs) at each corner of precast panels.
4. See Drawings for protection of embedded metals.
5. Bending requirements for reinforcing bars to be hot-dip galvanized vary slightly from ACI 318. Refer to ASTM A767 referenced in Specification Section 034100.
6. When erecting Precast structure, guy and plumb structure for stability. Guying and bracing shall remain until final stability is achieved. See Specification Section 034100 for information on plumbness.
7. Structure is designed for its final service condition. Contractor shall be responsible for piece design to withstand handling and erection forces, erection sequence, guying, staying, and shoring as required to assure structural stability during construction.
8. For exterior columns, no outward out-of-plumbness tolerance is permitted.
9. Install expansion joints after all guying and bracing has been removed and column plumbness has been measured to be within tolerance.
10. Minimum additional load factor of 1.2 shall be used for design of all superstructure connections unless superseded by seismic requirements of applicable building code. See specifications section 034100 for more information.
11. Floor drainage layout is based on a maximum double tee camber of 1". Design of P/C double tees shall be such that final in-service camber does not exceed this value. Precast Contractor shall review floor drainage layout and notify Engineer of any discrepancies or constructability issues prior to fabrication.
12. Steel connections providing gravity support either directly or indirectly (such as torsion connections) shall be fireproofed to meet fire rating requirement of supported structural element.

E. Concrete Protection for Reinforcement:

1. Specified concrete protection for reinforcement shall be per ACI 318-14, Section 20.6.
2. For prestressed and non-prestressed reinforcement in prestressed/precast concrete members, specified concrete protection at top members shall be 1-1/2 inches consistent with ACI 362.1R-12, "Guide for the Design of Durable Parking Structures."
3. For reinforcement in cast-in-place concrete, specified concrete protection shall be as follows:

	Concrete Cover (Inches)
a. Footing top reinforcement	2
b. Footing bottom and side reinforcement	3
c. Wall reinforcement #5 bar and smaller	1 1/2
d. Wall reinforcement #6 bar and large	2

F. Saw Cutting of Control Joints for Cast-In-Place Concrete Slabs:

1. The specifications specify that the concrete slab-on-grade control joints are to be tooled joints. Tooled joints provide the best performance for crack control due to the early creation of the joint with respect to the hardening timeline of the concrete
2. The Contractor may opt to use the process of saw cutting the slab-on-grade provided the following procedure is strictly followed.
3. The procedure consists of an initial saw cut as soon as possible after the concrete pour and a secondary beveled cut along the initial cut within 24 hours to form the complete slab-on-grade control joint.
4. The procedure references the following equipment:
   a. Initial cut made from a saw with a 1/8" wide blade creating a 1/2" deep cut.
   b. A handheld saw for completing the initial and secondary cuts at walls and columns.
   c. Secondary cut made from a decorative saw with a 5/8" beveled blade.
5. The procedure is as follows:
   a. Pour and finish slab-on-grade.
   b. Make tooled joints at locations where saw cutting may be difficult such as joints at washes where slab is sloping.
   c. Make initial saw cut as soon as the broom finish will not be damaged by the saw operating on the slab. Run the saw cut across full length of the slab and complete the cuts at the ends near walls and columns with a handheld saw.
   d. Use a vacuum or a blower to remove saw cut concrete dust so as to not affect the curing of the concrete slab.
   e. Protect all joint intersections with a "joint saver" to keep joint spalling to a minimum.
   f. Make secondary cut no later than 24 hours after the initial cut. The saw with the beveled blade shall use a guide to ride in the initial cut to create a clean joint.

IV. CONCRETE MASONRY

A. Material Properties:

1. Compressive strength of masonry, f'm = 2000 psi.
2. Mortar type "M" or "S".

B. General Concrete Masonry Notes:

1. Provide dowels between foundations and walls equal to size and spacing of vertical wall reinforcing, unless noted otherwise.
2. Minimum reinforcement for masonry wall subject to bumper loads shall be #5 @ 8 in. o.c. for a height of 2 feet 8 inches above floor and grout all block cores solid up to 2 feet 8 inches above floor. Minimum reinforcement for masonry walls not subject to bumper loads shall be #4 @ 48" o.c. plus one #4 verticals at corners, edges of openings, and ends of walls. Grout block cells with reinforcement full.
3. In masonry walls, provide 8-in.-wide bond beam lintels reinforced with two #5 bars continuous unless shown otherwise on Drawings. Concrete block for three courses directly below bond beam bearing and extending out at an angle of 45 degrees shall be solid block or shall be grouted solid, unless noted otherwise.
4. Provide control joints in masonry walls at 20 ft. on center maximum or as noted on Drawings.

V. STRUCTURAL STEEL

	Fy, psi	ASTM
A. Structural Shapes		
1. W-shapes	50,000	A992
2. M-shapes, S-shapes, HP-shapes, channels, angles	36,000	A36
B. Hollow Structural Sections		
1. All shapes	50,000	A1085
C. Steel Pipes	35,000	A53 GR. B
D. Structural Plates and Bars	36,000	A36
E. Bolts		
1. 1/2" dia. to 1" dia., UN	92,000	A325
2. 1-1/8" dia. to 1-1/2" dia. UN	81,000	A325
F. Anchor Rods	36,000	F1554 GR. 36
G. Welding Electrodes	E70XX	AWS D1.1-11

H. General Structural Steel Notes
1. Lintel shall have a minimum end bearing on masonry of 8 inches, but not less than 1 inch of such bearing for each foot of opening.

VI. MISCELLANEOUS

A. For exact sizes and locations of mechanical and electrical items and openings, consult respective subcontractors.

B. See specifications for additional information.

C. Inserts called out on Drawings shall be as designated below for diameters indicated. Nomenclature is for Dayton/Richmond Concrete Accessories.

1. 1/2 inch diameter,	Type B-16	
2. 3/4 inch diameter,	Type F-56,	2 Strut
3. 1 inch diameter,	Type F-56,	2 Strut
4. 1-1/4 inch diameter,	Type F-58	4 Strut

5. Provide coil bolts and rods with necessary penetration into inserts to develop full strength per manufacturer's recommendations.

D. Post-Installed Anchors or Reinforcing Bars

1. Post-installed anchors shall only be used where shown on Construction Documents. Contractor shall obtain approval from Engineer-of-Record prior to installing post-installed anchors or reinforcing bars in place of missing or misplaced cast-in-place anchors or reinforcing bars. Care shall be taken in placing post-installed anchors or reinforcing bars to avoid conflicts with existing rebar. Holes shall be drilled and cleaned in accordance with manufacturer's written instructions. Substitution request for installation other than those shown shall be submitted by Contractor to Engineer-of-Record along with calculations that are prepared and sealed by a registered professional engineer. Calculations shall demonstrate that substituted product is capable of achieving pertinent equivalent performance values (minimum) of specified product using appropriate design procedure and/or standard(s) as required by building code.
   See Specification Section 033000.
   a. Concrete Anchors
      1. Mechanical anchors for use in cracked and uncracked concrete shall have been tested and qualified for use in accordance with ACI 355.2 and ICC-ES AC193.
      2. Adhesive anchors for use in cracked and uncracked concrete shall have been tested and qualified for use in accordance with ACI 355.4 as modified by ICC-ES AC308.
   b. Masonry Anchors
      1. Anchorage to Solid-Grouted Concrete Masonry
         a. Mechanical and concrete screw anchors for use in solid-grouted concrete masonry shall have been tested and qualified for use in accordance with ICC-ES AC01 or AC106, respectively.
         b. Adhesive anchors for use in solid-grouted concrete masonry shall have been tested and qualified for use in accordance with ICC-ES AC58.
      2. Anchorage to Hollow Concrete Masonry/Unreinforced Clay Brick Masonry
         a. Screw anchors for use in hollow concrete masonry shall have been tested and qualified in accordance with ICC-ES AC106.
         b. Adhesive anchors with screen tubes shall be tested and qualified in accordance with ICC-ES AC58 or AC60, as appropriate. Appropriate screen tube shall be used as recommended by adhesive manufacturer.

E. Abbreviations - See Sheet S-002

F. DO NOT SCALE THE DRAWINGS

VII. DEFERRED SUBMITTALS

A. Following items will have a design that was performed and submitted by a specialty contractor during construction phase of project. For information, see appropriate Specification Sections related to these items.

1. Rigid Inclusions
2. Precast concrete elements
3. Light gage framing

B. Engineer of Record shall review deferred submittal drawings and calculations prepared by Contractor and forward them to Building Official with notation indicating deferred submittal documents have been reviewed and found to be in general conformance with design requirements. Deferred submittal items shall not be installed until design and submittal documents have been approved by Building Official.

VIII. CONNECTION COMPONENT COORDINATION

A. Following specifies subcontractor responsible for providing connection components. Where connections occur between two different trades, Construction Manager shall coordinate between the two subcontractors as required to locate and install these items. Refer to specifications for additional information.
B. Embedded plates in precast concrete elements shall be provided by precast contractor. CM shall coordinate between precast contractor and appropriate subcontractor to locate embedded plates as necessary.
C. Precast-to-precast steel connection and bearing components, including angles, tubes and other steel shapes as required by design, shall be provided by precast contractor. Where coating is removed or damaged during installation, precast contractor shall repair coating in field.
D. Structural steel-to-precast connection components shall be provided by structural steel contractor. Embedded plates (where required) in precast for connection shall be provided by precast contractor. Where coating is removed or damaged during installation, structural steel contractor shall repair coating in field.
E. Precast concrete-to-cast-in-place concrete connection components, including angles, shall be provided by precast contractor. Where coating is removed or damaged during installation, precast contractor shall repair coating in field.
F. Clip angles, plates, and connection components for CMU wall to concrete elements shall be provided by miscellaneous metals contractor. General Contractor shall coordinate connections between miscellaneous metals contractor and CIP or P/C contractor as appropriate. Where coating is removed or damaged during installation, miscellaneous metals contractor shall repair coating in field.

IX. TESTING & INSPECTION NOTES

A. Following test and inspections shall be performed by an independent testing and inspection agency employed by design/build contractor and approved by Engineer and Building Official. Test and inspection reports shall be submitted for approval to Engineer and Building Official. Conform to requirements of IBC section 109 and 1704.

SPECIAL INSPECTIONS SCHEDULE

		REQUIRED VERIFICATION & INSPECTION	CONT	PERIODIC
A. CONCRETE CONSTRUCTION				
1.		Inspection of reinforcing steel, including prestressing tendons, and placing		X
2.		Inspection of reinforcing steel welding:		
	a.	Verification of weldability of reinforcing steel other than ASTM A706		X
	b.	Reinforcing steel resisting flexural and axial forces in intermediate and special moment frames, and boundary elements of special reinforced concrete shear walls	X	
	c.	Shear reinforcement	X	
	d.	Other reinforcing steel		X
	e.	Bumper wall reinforcing	X	
3.		Inspection of bolts to be installed in concrete prior to and during placement of concrete where allowable loads have been increased or where strength design is used	X	
4.		Inspection of anchors installed in hardened concrete		X
5.		Verifying use of required design mix		X
6.		Perform sampling and testing of concrete according to specifications	X	
7.		Inspection of concrete and shotcrete placement for proper application techniques	X	
8.		Inspection for maintenance of specified curing temperature and techniques		X
9.		Verification of in-situ concrete strength, prior to stressing of tendons in post-tensioned concrete and prior to removal of shores and forms from beams and structural slabs		X
10.		Inspect formwork for shape, location and dimensions of concrete member being formed		X
11.		Verify finish of concrete slabs and floors (see specification section 033000)		X
12.		Verify location and construction of pour strips and joints in concrete slabs and floors (see specification section 033000 and structural drawings)		X
B. PRECAST CONCRETE				
1.		Erection of precast concrete members		X
2.		Verification of precast member connections in accordance with structural drawings and precast construction (shop) drawings		X
C. STEEL CONSTRUCTION				
1.		Material verification of high-strength bolts, nuts, and washers:		
	a.	Identification markings to conform to ASTM standards specified in construction documents		X
	b.	Manufacturer's certificate of compliance required		X
2.		Inspection of high-strength bolting:		
	a.	Bearing-type connections		X
	b.	Slip-critical connections (see IBC 1704.3.3)	X	X
3.		Material verification of structural steel:		
	a.	Identification markings to conform to ASTM standards in approved construction documents		X
	b.	Manufacturer's certified mill test reports		X
4.		Material verification of weld filler materials:		
	a.	Identification markings to conform to AWS specification in approved construction documents		X
	b.	Manufacturer's certificate of compliance required		X
5.		Inspection of structural steel welding:		
	a.	Complete and partial penetration groove welds	X	
	b.	Multi-pass fillet welds	X	
	c.	Single-pass fillet welds > 5/16"	X	
	d.	Single-pass fillet welds ≤ 5/16"		X
	e.	Floor and deck welds		X
6.		Inspection of steel frame joint details for compliance with construction documents:		
	a.	Details such as bracing and stiffening		X
	b.	Member locations		X
	c.	Application of joint details at each connection		X
D. MASONRY CONSTRUCTION (SEE IBC SECTION 1704.5.2)				
1.		Verification of slump flow and VSI as delivered to the site for self-consolidating grout	X	
2.		Verification of masonry construction		
	a.	Proportions of site-prepared mortar		X
	b.	Construction of mortar joints		X
	c.	Location of reinforcement, connectors, and anchorages		X
3.		During construction the inspection program shall verify:		
	a.	Size and location of structural elements		X
	b.	Type, size, and location of anchors, including other details of anchorage of masonry to structural members, frames, or other construction		X
	c.	Specified size, grade, and type of reinforcement, anchor bolts, and anchorages		X
	d.	Preparation, construction and protection of masonry during cold weather (temperature below 40°F) or hot weather (temperature above 90°F)		X
4.		Prior to grouting, the following shall be verified to ensure compliance:		
	a.	Grout space is clean		X
	b.	Placement of reinforcement and connectors, and anchorages		X
	c.	Construction of mortar joints		X
5.		Preparation of any required grout specimens, mortar specimens and/or prisms shall be observed		X
E. SOILS				
1.		Verify materials below footings are adequate to achieve design bearing capacity		X
2.		Verify excavations are extended to proper depth and have reached proper material		X
3.		Perform classification and testing of controlled fill materials		X
4.		Verify use of proper materials, densities, and lift thicknesses during placement and compaction of controlled fill	X	
5.		Prior to placement of controlled fill, observe subgrade and verify that site has been prepared properly		X
F. RIGID INCLUSIONS				
1.		Verify element materials, sizes, and lengths comply with requirements.	X	
2.		Determine capacities of test elements and conduct additional load tests as required.	X	
3.		Observe driving operations and maintain complete and accurate records for each element.	X	
4.		Verify placement locations and plumbness, confirm type and size of hammer, record number of blows per foot of penetration, determine required penetrations to achieve design capacity, record tip and butt elevations, and document any damage to foundation element.	X	
G. GUARDRAIL STRANDS				
1.		Material verification of guardrail strands (see specification section 051617)		X
2.		Inspect placement of guardrail strands		X
3.		Verification of backstress to seat wedges at non-stressing ends.	X	
4.		Verification of specified stressing forces and backstress at stressing ends	X	
5.		Restoration of corrosion protection after back stressing		X
6.		Sealing of sleeves in column		X
H. MISCELLANEOUS ITEMS				
1.		Verify installation of expansion joints, traffic topping membranes, and joint sealants		X
2.		Verify attachment and/or bracing of miscellaneous items such as pipes, equipment, signs, bollards, etc.		X
3.		Verify fire retardant paint on telecom plywood.		X

UNCW
UNIVERSITY of NORTH CAROLINA WILMINGTON
601 S COLLEGE ROAD
WILMINGTON, NORTH CAROLINA 28403

PARKING DECK II AND SURFACE PARKING (DESIGN-BUILD)
SOUTH CAMPUS - 4965 RIEGEL ROAD

SCO ID NUMBER: 18-19226-01A
CODE: 441828
ITEM: 301

CONTRACTOR
Balfour Beatty Construction

DESIGNER
CLARKNEXSEN
1523 ELIZABETH AVENUE, SUITE 300
CHARLOTTE, NORTH CAROLINA 28204
704.377.8800
CLARK NEXSEN LICENSE NUMBER: C-1028

WALKER CONSULTANTS
13860 Ballantyne Corporate Place
Suite 140
Charlotte, NC 28277
T: 704.247.6230
www.walkerconsultants.com
NC License No. F-0518

McKIM&CREED
CIVIL ENGINEER
243 NORTH FRONT STREET
WILMINGTON, NORTH CAROLINA
28401
910.343.1048

PROFESSIONAL SEAL

NOT FOR CONSTRUCTION
NORTH CAROLINA PROFESSIONAL SEAL 028007 ENGINEER JOEY D. ROWLAND

SUBMITTAL
03-29-2019
75% CONSTRUCTION DOCUMENTS

REVISIONS

KEY PLAN

SHEET
STRUCTURAL GENERAL NOTES

S-001

DESIGN: Designer
DRAWN: Author
REVIEW: Checker

CN PROJECT NUMBER

4/17/2019 7:50:58 AM
C:\Revit Projects\UNC Wilmington Deck II_r17_roy.grantham.rvt

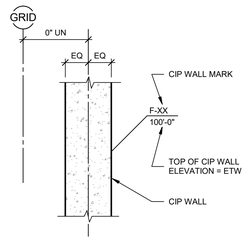

NOTE:
1. SEE CAST-IN-PLACE WALL SCHEDULE AND CAST-IN-PLACE WALL NOTES FOR ADDITIONAL INFORMATION

1 STRUCTURAL CIP WALL LEGEND

3/4" = 1'-0"

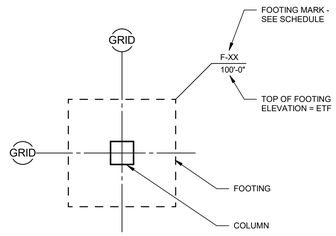

2 SPREAD FOOTING LEGEND

3/4" = 1'-0"

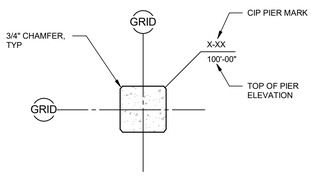

NOTE:
1. SEE CIP PIER SCHEDULE AND CIP PIER NOTES FOR ADDTIONAL INFORMATION.

3 STRUCTURAL FOUNDATION LEGEND FOR CIP PIER

3/4" = 1'-0"

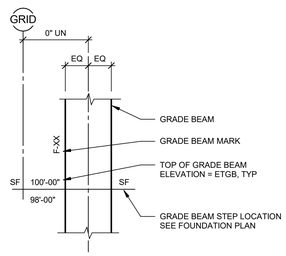

NOTE:
1. SEE GRADE BEAM SCHEDULE AND GRADE BEAM NOTES FOR ADDITIONAL INFORMATION.

4 STRUCTURAL GRADE BEAM LEGEND

3/4" = 1'-0"

ABBREVIATIONS

ABBRV	TERM
A/E	ARCHITECT/ENGINEER
AB	ANCHOR BOLT
ABBRV	ABBREVIATION
ACI	AMERICAN CONCRETE INSTITUTE
ADDM	ADDENDUM
AISC	AMERICAN INSTITUTE OF STEEL CONSTRUCTION
ALT	ALTERNATE
ALUM	ALUMINUM
ANSI	AMERICAN NATIONAL STANDARDS INSTITUTE
APPROX	APPROXIMATE
ARCH	ARCHITECT
ASCE	AMERICAN SOCIETY OF CIVIL ENGINEERS
ASI	ARCHITECT'S SUPPLEMENTAL INSTRUCTION
ASTM	AMERICAN SOCIETY FOR TESTING AND MATERIALS
AVG	AVERAGE
AWS	AMERICAN WELDING SOCIETY
B	BEAM
B PL	BASE PLATE
BC	BACK OF CURB
BC	BOLT CIRCLE
BLDG	BUILDING
BOS	BOTTOM OF STEEL
BOT	BOTTOM
BRG	BEARING
BRG PL	BEARING PLATE
BS	BOTH SIDES
BTWN	BETWEEN
C	C SHAPE
C TO C	CENTER TO CENTER
CAM	CAMBER
CANTIL	CANTILEVER
CD	CONSTRUCTION DOCUMENTS
CERT	CERTIFY
CG	CENTER OF GRAVITY
CHFR	CHAMFER
CIP	CAST-IN-PLACE
CJ	CONSTRUCTION JOINT
CJ	CONTROL JOINT
CL	CENTER LINE
CLR	CLEAR
CMU	CONCRETE MASONRY UNIT
COL	COLUMN
CONC	CONCRETE
CONN	CONNECT
CONN	CONNECTION
CONSTR	CONSTRUCTION
CONT	CONTINUE
CONT	CONTINUOUS
CONTR	CONTRACTOR
COORD	COORDINATE
CP	CONCRETE PIER
CRSI	CONCRETE REINFORCING STEEL INSTITUTE
CTR	CENTER
CU YD	CUBIC YARD
D	DEEP
D	DEPTH
DAT	DATUM
DBA	DEFORMED BAR ANCHOR
DD	DESIGN DEVELOPMENT
DEG	DEGREE
DET	DETAIL
DEV	DEVELOPMENT
DIA	DIAMETER
DIAG	DIAGONAL
DL	DEAD LOAD
DOC	DOCUMENT
DP	DRILLED PIER
DWG	DRAWING
E	MODULUS OF ELASTICITY
EA	EACH
EE	EACH END
EF	EACH FACE
EJ	EXPANSION JOINT
EL	ELEVATION
ELEV	ELEVATOR
ENGR	ENGINEER
EOS	EDGE OF SLAB
EQ	EQUAL
EQ	SEISMIC
EQUIP	EQUIPMENT
EQUIV	EQUIVALENT
ETC	AND SO FORTH
EW	EACH WAY
EW EF	EACH WAY EACH FACE
EWP	ELEVATION WORKING POINT
EXIST	EXISTING
EXP	EXPANSION
EXT	EXTERIOR
F	FAHRENHEIT
FD	FLOOR DRAIN
FDTN	FOUNDATION
FF	FAR FACE
FIN	FINISH
FIN FLR	FINISH FLOOR
FLG	FLANGE
FLR	FLOOR
FO	FINISHED OPENING
FS	FAR SIDE
FT	FEET
FT	FOOT
FT-K	FOOT-KIPS
FT-LB	FOOT-POUNDS
FUT	FUTURE
G	GIRDER
GA	GAGE
GALV	GALVANIZED
GALV STL	GALVANIZED STEEL
GC	GENERAL CONTRACTOR
GFRC	GLASS-FIBER-REINFORCED CONCRETE
GR	GRADE
GR BM	GRADE BEAM
H	HIGH
HC	HOLLOW CORE
HORIZ	HORIZONTAL
HP	HP-STEEL SECTION
HSS	HOLLOW STRUCTURAL STEEL SECTION
HST	HOIST
HT	HEIGHT
HVAC	HEATING, VENTILATING, AND AIR CONDITIONING
I	MOMENT OF INERTIA
IBC	INTERNATIONAL BUILDING CODE
ID	INSIDE DIAMETER
IF	INSIDE FACE
IN-K	INCH-KIPS
IN-LB	INCH-POUND
INFO	INFORMATION
INT	INTERIOR
INV	INVERT
INV EL	INVERT ELEVATION
ISO	ISOMETRIC
K	KIP(S)
KLF	KIPS PER LINEAL FOOT
KSF	KIPS PER SQUARE FOOT
KSI	KIPS PER SQUARE INCH
KWY	KEYWAY

ABBREVIATIONS

ABBRV	TERM
L	ANGLE
LAT	LATITUDE
LBS	POUND
LF	LINEAR FEET (FOOT)
LL	LIVE LOAD
LLH	LONG LEG HORIZONTAL
LLV	LONG LEG VERTICAL
LONG	LONGITUDINAL
LP	LIGHT POLE
LT GA	LIGHT GAGE
LT WT	LIGHTWEIGHT
LYR	LAYER
M	M-STEEL SHAPE
M	MOMENT
MAX	MAXIMUM
MECH	MECHANICAL
MECH RM	MECHANICAL ROOM
MFR	MANUFACTURER
MH	MANHOLE
MID	MIDDLE
MIN	MINIMUM
MISC	MISCELLANEOUS
MO	MASONRY OPENING
MT	MT-STEEL SHAPE
N	NORTH
NA	NOT APPLICABLE
NF	NEAR FACE
NIC	NOT IN CONTRACT
NO	NUMBER
NOM	NOMINAL
NS	NEAR SIDE
NSNM	NON-SHRINK NON-METALLIC
NTS	NOT TO SCALE
O/O	OUT TO OUT
OC	ON CENTER
OD	OUTSIDE DIAMETER
OF	OUTSIDE FACE
OPH	OPPOSITE HAND
OPNG	OPENING
OPP	OPPOSITE
ORIG	ORIGINAL
P	AXIAL LOAD
P/C	PRECAST
P/T	POST TENSIONED
PC	PILE CAP
PCF	POUNDS PER CUBIC FOOT
PCI	PRECAST/PRESTRESSED CONCRETE INSTITUTE
PL	PROPERTY LINE
PLF	POUNDS PER LINEAR FOOT
PRCST	PRECAST
R	RADIUS
RC	REINFORCED CONCRETE
RD	ROOF DRAIN
REBAR	REINFORCING STEEL BARS
REF	REFERENCE
REINF	REINFORCEMENT
REM	REMAINDER
REM	REMAINING
REQD	REQUIRED
REV	REVISION
RO	ROUGH OPENING
ROW	RIGHT OF WAY
S	SECTION MODULUS
SCHED	SCHEDULE
SDI	STEEL DECK INSTITUTE
SE	STRUCTURAL ENGINEER
SECT	SECTION
SF	SQUARE FOOT (FEET)
SF	STEP FOOTING
SHT	SHEET
SIM	SIMILAR
SJI	STEEL JOIST INSTITUTE
SOG	SLAB ON GROUND
SPEC	SPECIFICATION
STAG	STAGGERED
STD	STANDARD
STIF	STIFFENER
STIR	STIRRUP
STL PL	STEEL PLATE
STN STL	STAINLESS STEEL
STRUCT	STRUCTURAL
SYM	SYMMETRICAL
SYS	SYSTEM
T	TORSION
T&B	TOP AND BOTTOM
TD	TRENCH DRAIN
TEMP	TEMPORARY
TFF	TOP OF FINISH FLOOR
THRU	THROUGH
TO CP	TOP OF CONCRETE PIER
TO DP	TOP OF DRILLED PIER
TO FDTN	TOP OF FOUNDATION
TO P/C	TOP OF PRECAST
TO PC	TOP OF PILE CAP
TOB	TOP OF BEAM
TOC	TOP OF CONCRETE
TOF	TOP OF FOOTING
TOF	TOP OF FOUNDATION
TOS	TOP OF SLAB
TOS	TOP OF STEEL
TOW	TOP OF WALL
TRANS	TRANSVERSE
TS	TUBE STEEL
TYP	TYPICAL
UL	UNDERWRITERS LABORATORIES
ULT	ULTIMATE
UN	UNLESS NOTED
UNIF	UNIFORM
UNO	UNLESS NOTED OTHERWISE
V	SHEAR
VAR	VARIES
VERT	VERTICAL
VIF	VERIFY IN FIELD
VRFY	VERIFY
W	W-STEEL SHAPE
W	WIDE
W/	WITH
W/O	WITHOUT
WF	WIDE FLANGE
WL	WIND LOAD
WP	WORKING POINT
WT	WEIGHT
WT	WT-STEEL SHAPE
WWR	WELDED WIRE REINFORCEMENT
X BRACE	CROSS BRACE
YD	YARD
Z	MODULUS OF SECTION

STRUCTURAL GENERAL LEGEND

- CIP
- CIP (PLAN CUT)
- PRECAST CONCRETE
- CMU
- CONCRETE WASH ON PRECAST CONCRETE
- CIP POUR STRIP
- TRAFFIC TOPPING
- (1) SHEET NOTE

UNIVERSITY of NORTH CAROLINA WILMINGTON
601 S COLLEGE ROAD
WILMINGTON, NORTH CAROLINA 28403

PARKING DECK II AND SURFACE PARKING (DESIGN-BUILD)
SOUTH CAMPUS - 4965 RIEGEL ROAD

SCO ID NUMBER: 18-19226-01A
CODE: 441828
ITEM: 301

CONTRACTOR
Balfour Beatty Construction

DESIGNER
CLARKNEXSEN
1523 ELIZABETH AVENUE, SUITE 300
CHARLOTTE, NORTH CAROLINA 28204
704.377.8800
CLARK NEXSEN LICENSE NUMBER: C-1028

WALKER CONSULTANTS
13860 Ballantyne Corporate Place
Suite 140
Charlotte, NC 28277
T: 704.247.6230
www.walkerconsultants.com
NC License No. F-0518

McKIM&CREED
CIVIL ENGINEER
243 NORTH FRONT STREET
WILMINGTON, NORTH CAROLINA
28401
910.343.1048

PROFESSIONAL SEAL
NOT FOR CONSTRUCTION
NORTH CAROLINA PROFESSIONAL SEAL 028007 ENGINEER JOEY D. ROWLAND

SUBMITTAL
03-29-2019
75% CONSTRUCTION DOCUMENTS

REVISIONS

KEY PLAN

SHEET
ABBREVIATIONS AND LEGENDS

S-002

DESIGN: Designer
DRAWN: Author
REVIEW: Checker

CN PROJECT NUMBER

4/1/2019 7:51:01 AM
C:\Revit Projects\UNC Wilmington Deck II_r17_roy.grantham.rvt

SPREAD FOOTING SCHEDULE								
	SIZE			REINFORCING				
				LONGITUDINAL		TRANSVERSE		
MARK	LENGTH	WIDTH	DEPTH	BOTTOM	TOP	BOTTOM	TOP	REMARKS
			1' - 6"	#10 @ 8" OC	#10 @ 8" OC	#10 @ 8" OC	#10 @ 8" OC	
F1	16' - 6"	11' - 6"	2' - 6"	(12) - #10		(17) - #10		
F2	13' - 6"	13' - 6"	2' - 9"	(14) - #9		(14) - #9		
F3	12' - 6"	12' - 6"	2' - 6"	(13) - #9		(13) - #9		
F4	14' - 6"	14' - 6"	2' - 9"	(15) - #10		(15) - #10		
F5	16' - 6"	16' - 6"	3' - 8"	(17) - #10		(17) - #9		
F6	17' - 6"	8' - 0"	2' - 0"	(7) - #9		(18) - #9		
F7	36' - 6"	18' - 6"	2' - 6"	(19) - #11	(19) - #5	(37) - #11	(37) - #5	
F8	SEE PLAN	SEE PLAN	3' - 0"	(28) - #9	(28) - #5	(53) - #9	(53) - #5	
F9			2' - 6"	#10 @ 8" OC	#10 @ 8" OC	#10 @ 8" OC	#10 @ 8" OC	

SPREAD FOOTING SCHEDULE NOTES:

1. ALL REINFORCEMENT SHALL BE PLACED AT EVEN SPACING UNO.
2. FOOTINGS ARE CENTERED ON GRID LINES UNO.
3. MINIMUM SOIL BEARING CAPACITY SHALL BE 6000 PSF AS VERIFIED BY TESTING AGENCY. IF REQUIRED BY GEOTECHNICAL ENGINEER, UNDERCUT SUBGRADE AND REPLACE WITH STRUCTURAL FILL OR LEAN CONCRETE.
4. PLACE LONGITUDINAL BARS BELOW TRANSVERSE BARS FOR BOTTOM BARS.

STRIP FOOTING SCHEDULE							
	SIZE		REINFORCING				
			LONGITUDINAL		TRANSVERSE		
MARK	WIDTH	DEPTH	BOTTOM	TOP	BOTTOM	TOP	REMARKS
SF-1	6' - 6"	2' - 0"	(7) - #5	(7) - #5	#7 @ 12" OC	#7 @ 12" OC	
SF-2	5' - 8"	2' - 0"	(6) - #5	(6) - #5	#5 @ 12" OC	#5 @ 12" OC	
SF-3	2' - 8"	1' - 6"	(4) - #5		#5 @ 12" OC		

STRIP FOOTING SCHEDULE NOTES:

1. ALL REINFORCEMENT SHALL BE PLACED AT EVEN SPACING UNO.
2. SEE S/S-510 FOR STRIP FOOTING CONSTRUCTION JOINT.
3. MINIMUM SOIL BEARING CAPACITY SHALL BE 6000 PSF AS VERIFIED BY TESTING AGENCY. IF REQUIRED BY GEOTECHNICAL ENGINEER, UNDERCUT SUBGRADE AND REPLACE WITH STRUCTURAL FILL OR LEAN CONCRETE. SF-4 FOOTINGS ARE NON-LOAD BEARING AND ARE NOT REQUIRED TO HAVE A 6000 PSF MINIMUM SOIL BEARING CAPACITY.
4. FULLY DEVELOP STRIP FOOTINGS INTO ADJACENT FOOTINGS. SEE S-690 FOR DEVELOPMENT LENGTHS.
5. PLACE LONGITUDINAL BARS BELOW TRANSVERSE BARS FOR BOTTOM BARS.

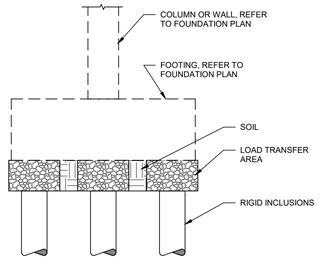

NOTE:
1. RIGID INCLUSIONS SYSTEM TO BE A DELEGATED DESIGN BY THE GROUND IMPROVEMENT SUBCONTRACTOR.
2. RIGID INCLUSIONS SYSTEM TO PROVIDE 6000 PSF MIN BEARING FOR FOOTINGS. FOR BIDDING PURPOSES ASSUME ALL LOAD BEARING FOOTINGS REQUIRE 6000 PSF UNDER ENTIRE FOOTING
3. DIAMETER OF LOAD TRANSFER AREA AROUND EACH RIGID INCLUSION SHALL BE AT LEAST 2"DIA. OF THE ASSOCIATED RIGID INCLUSION.

2 SOIL IMPROVEMENT DETAIL

1/2" = 1'-0"

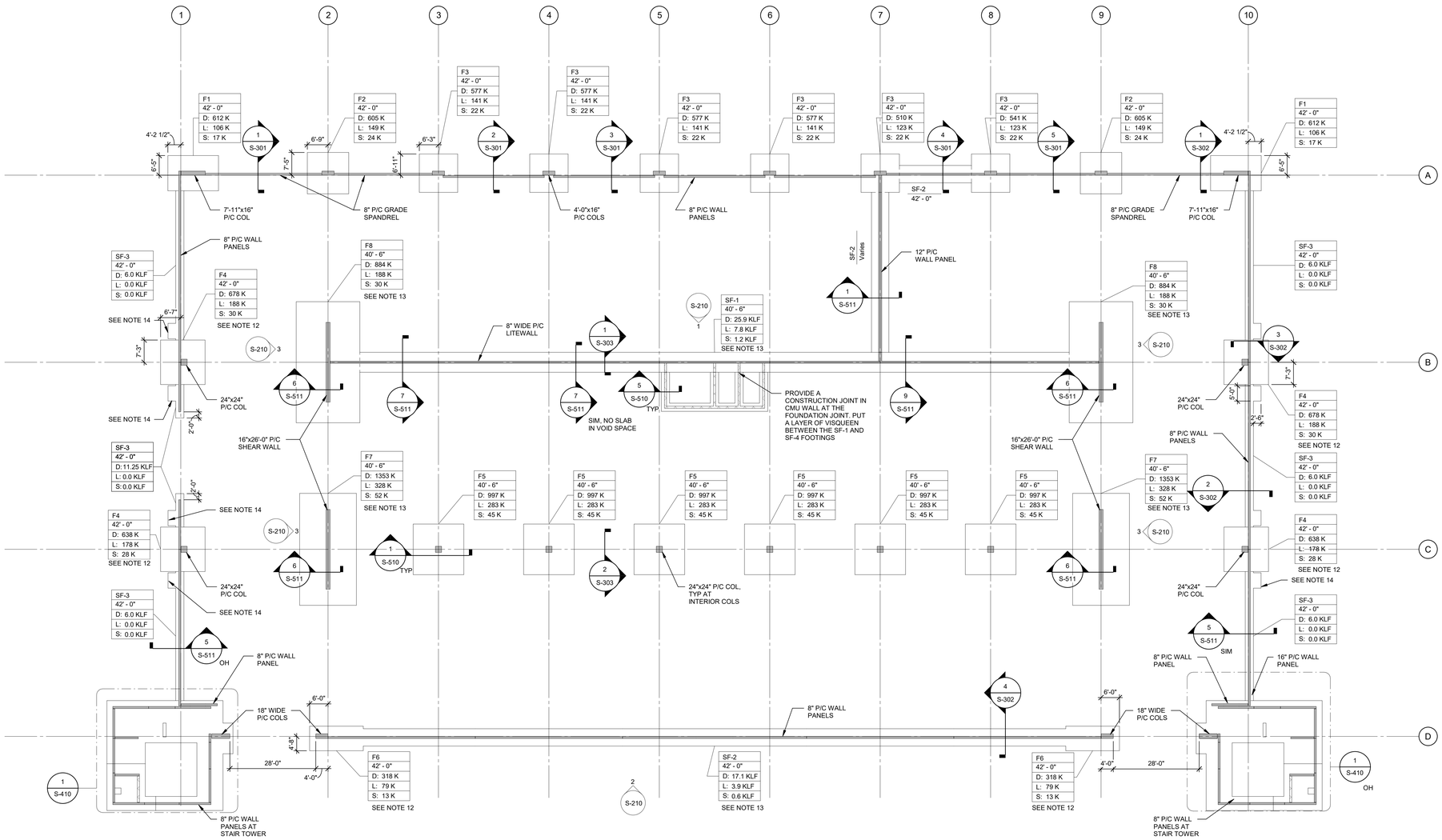

1 FOUNDATION PLAN

1/16" = 1'-0"

SHEET NOTES

REFERENCES:

1. GENERAL NOTES. S-001
2. PRECAST COLUMN SCHEDULE S-103
3. TYPICAL DETAILS S-501
4. ENLARGED PLANS S-400 SERIES
5. FOUNDATION DETAILS S-510
6. CIP FOOTING SCHEDULE AND TYPICAL DETAILS S-601
7. CIP PIER SCHEDULE AND DETAILS S-601
8. REFER TO GENERAL NOTES FOR FOUNDATION INFORMATION AND SUB-GRADE PREPARATION AND DRAINS BEHIND RETAINING WALLS.

NOTES:

1. PROVIDE 3" CLEAR COVER FOR ALL BOTTOM REINFORCEMENT AND 2" CLEAR COVER FOR ALL TOP REINFORCEMENT, UNLESS NOTED.
2. AT LOCATIONS WHERE PRECAST WALLS ARE SUPPORTED ON FOUNDATIONS, PROVIDE EMBEDDED PLATES IN FOUNDATIONS, COORDINATE WITH PRECAST SUPPLIER. SEE S-524.
3. ANCHOR BOLTS, PLATES WITH WELDED ANCHORS, REINFORCING BAR CAGES WITH NMB SPLICES (OR SIMILAR) OR ANY OTHER CONNECTION MATERIALS THAT CONNECT THE PRECAST CONCRETE MEMBERS TO THE CIP CONCRETE FOUNDATIONS ARE TO BE SUPPLIED BY THE PRECAST SUPPLIER AND INSTALLED BY THE GENERAL CONTRACTOR. WARNING TO GENERAL CONTRACTOR: COORDINATE WITH PRECAST SUPPLIER TO FULLY UNDERSTAND THE LARGE MAGNITUDE OF THE EMBEDS TO BE INSTALLED AND THE VERY TIGHT TOLERANCES REQUIRED!
4. THE GENERAL CONTRACTOR IS RESPONSIBLE FOR THE DESIGN AND CONSTRUCTION OF ALL TEMPORARY EXCAVATION BRACING, SHEETING AND SHORING.
5. COORDINATE PENETRATIONS IN CAST-IN-PLACE & PRECAST MEMBERS WITH MEP AND CIVIL DRAWINGS, SHOW PENETRATIONS ON ALL SHOP DRAWINGS. SEE DETAILS 11/S-501.
6. FOR UTILITIES NEAR FOUNDATIONS, SEE 4/S-510 .
7. SEE CIVIL DRAWINGS FOR EXTERIOR GRADES, UTILITIES, ADJACENT STRUCTURES AND PROPERTY LINES. NOTIFY ENGINEER IN WRITING OF ANY CONFLICTS IMMEDIATELY.
8. VERIFY ALL DIMENSIONS WITH ARCHITECTURAL DRAWINGS.
9. SEE DRAWING S-101 FOR GRADE SLAB AND SLAB SUBGRADE INFORMATION.
10. FOR ANCHOR BOLT REQUIREMENTS, SEE 1/S-525 & 2/S-525.
11. CONTRACTOR TO PROTECT SUBGRADE FROM DAMAGE DUE TO WEATHER.
12. LOADS SHOWN INCLUDE COLUMN LOADS ONLY. WALL LOADS NEED TO BE INCLUDED SEPARATELY.
13. WALL(S) HAVE ADDITIONAL CONTROLLING SEISMIC REVERSIBLE OVERTURNING MOMENTS. GROSS MOMENTS FOR WALL(S) ARE:
    - 26' WALL(S) ALONG GRID B/2-9 = 6,600 KIP-FT
    - 36' WALLS ALONG B/2, B/9, C/2, & C/9 = 18,500 KIP-FT
    - 48' WALL(S) ALONG GRID D/2-9 = 4,700 KIP-FT
    - 60' WALL(S) ALONG GRID D/2-9 = 13,000 KIP-FT
14. EXTEND SF-3. USE SAME REINFORCEMENT SIZE AND SPACING. DEAD LOAD IS 27 KIPS.

LEGEND

- CIP
- PRECAST CONCRETE
- CMU
- STEP

UNCW
UNIVERSITY of NORTH CAROLINA WILMINGTON
601 S COLLEGE ROAD
WILMINGTON, NORTH CAROLINA 28403

PARKING DECK II AND SURFACE PARKING (DESIGN-BUILD)
SOUTH CAMPUS - 4965 RIEGEL ROAD

SCO ID NUMBER: 18-19226-01A
CODE: 441828
ITEM: 301

CONTRACTOR
Balfour Beatty Construction

DESIGNER
CLARKNEXSEN
1523 ELIZABETH AVENUE, SUITE 300
CHARLOTTE, NORTH CAROLINA 28204
704.377.8800
CLARK NEXSEN LICENSE NUMBER: C-1028

WALKER CONSULTANTS
13860 Ballantyne Corporate Place
Suite 140
Charlotte, NC 28277
T: 704.247.6230
www.walkerconsultants.com
NC License No. F-0518

McKIM&CREED
CIVIL ENGINEER
243 NORTH FRONT STREET
WILMINGTON, NORTH CAROLINA
28401
910.343.1048

PROFESSIONAL SEAL

NOT FOR CONSTRUCTION
NORTH CAROLINA PROFESSIONAL SEAL 028007 ENGINEER JOSEY D. ROWLAND

SUBMITTAL
03-29-2019
75% CONSTRUCTION DOCUMENTS

REVISIONS

KEY PLAN

SHEET
FOUNDATION PLAN

S-100

DESIGN: Designer
DRAWN: Author
REVIEW: Checker

CN PROJECT NUMBER

4/1/2019 7:51:05 AM
C:\Revit Projects\UNCW Wilmington Deck II_r17_roy grantham.rvt

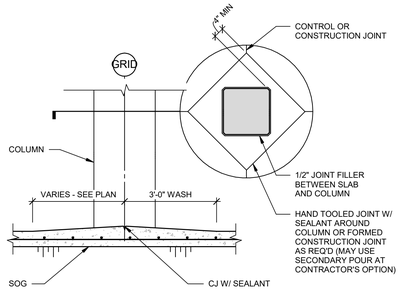

4 GRADE SLAB/COLUMN DETAIL
NTS

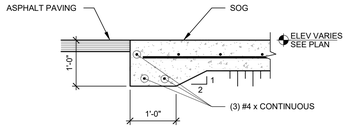

3 EDGE OF SLAB DETAIL
NTS

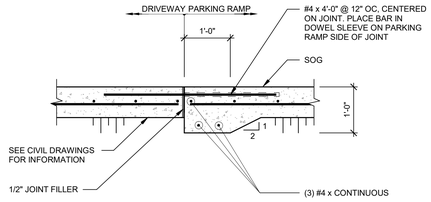

2 EDGE OF SLAB DETAIL
NTS

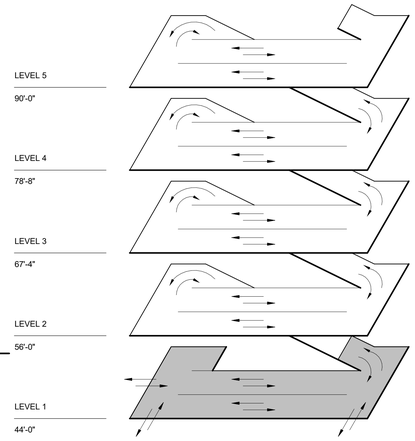

ISOMETRIC

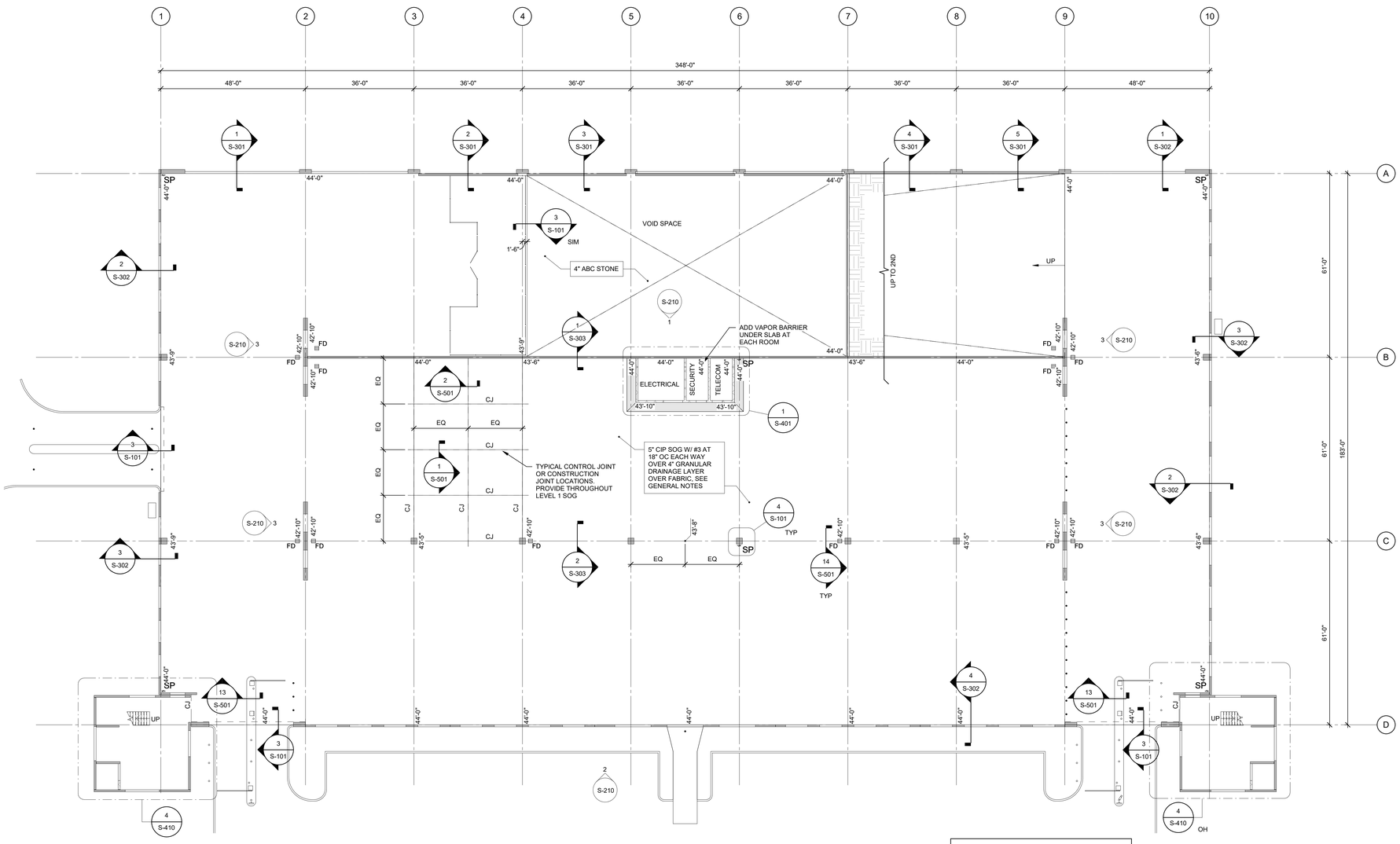

IT SHALL BE THE CONTRACTOR'S RESPONSIBILITY TO VERIFY THAT THERE IS A MINIMUM OF 8'-4" HEADROOM BETWEEN ALL DRIVING SURFACES AND OVERHEAD BEAMS PRIOR TO PLACING CONCRETE.

1 LEVEL 1 PLAN
1/16" = 1'-0"

SHEET NOTES

REFERENCES:

1.	GENERAL NOTES.	S-001
2.	TYPICAL DETAILS	S-501
3.	FOUNDATION INFORMATION	S-100
4.	TOP OF CIP WALLS	S-100
5.	PRECAST COLUMN SCHEDULE	S-103
6.	ENLARGED PLANS	S-400 SERIES

NOTES:

1. REFER TO SHEET S-001 FOR GENERAL NOTES.
2. REFER TO CIVIL DRAWINGS FOR EXTERIOR GRADE ELEVATIONS.
3. REFER TO ARCHITECTURAL DRAWINGS FOR ENTRY / EXIT PLANS.
4. REFER TO "S-400 & A-400" SERIES DRAWINGS FOR STAIR AND STAIR / ELEVATOR PLANS, ELEVATIONS AND SECTIONS.
5. REFER TO "S-500 & A-500" SERIES DRAWINGS FOR STAIR AND STAIR / ELEVATOR DETAILS.
6. REFER TO PLUMBING DRAWINGS FOR FLOOR DRAIN LOCATIONS AND DETAILS.
7. CONCRETE INTERIOR SLAB ON GROUND SHALL BE 5" THICK AND REINFORCED WITH #3 @ 18" OC EW, PLACED 2" CLEAR FROM TOP OF SLAB. SLAB SHALL BE PLACED ON A MINIMUM 4" THICK GRANULAR DRAINAGE LAYER. REFER TO GENERAL NOTES SECTIONS II.H AND II.I FOR SUBGRADE COMPACTION AND DRAINAGE LAYER INFORMATION.
8. PROVIDE 1/2" JOINT FILLER AT GRADE SLAB AROUND COLUMNS, TYPICAL.
9. USE STRAIGHT LINE INTERPOLATION FOR FLOOR ELEVATION BETWEEN THOSE INDICATED.
10. PROVIDE CONSTRUCTION OR CONTROL JOINTS IN CIP WALLS PER DETAILS ON S-501 TO MATCH JOINT IN SLAB-ON-GROUND.
11. PROVIDE CORNER REINFORCEMENT FOR SLABS PER DETAILS ON S-501.

LEGEND

- CIP
- PRECAST CONCRETE
- CMU
- CONCRETE WASH / TOPPING
- CIP POUR STRIP
- TRAFFIC TOPPING

UNCW
UNIVERSITY of NORTH CAROLINA WILMINGTON
601 S COLLEGE ROAD
WILMINGTON, NORTH CAROLINA 28403

PARKING DECK II AND SURFACE PARKING (DESIGN-BUILD)
SOUTH CAMPUS - 4965 RIEGEL ROAD

SCO ID NUMBER: 18-19226-01A
CODE: 441828
ITEM: 301

CONTRACTOR
Balfour Beatty Construction

DESIGNER
CLARKNEXSEN
1523 ELIZABETH AVENUE, SUITE 300
CHARLOTTE, NORTH CAROLINA 28204
704.377.8800
CLARK NEXSEN LICENSE NUMBER: C-1028

WALKER CONSULTANTS
13860 Ballantyne Corporate Place
Suite 140
Charlotte, NC 28277
T: 704.247.6230
www.walkerconsultants.com
NC License No. F-0518

McKIM&CREED
CIVIL ENGINEER
243 NORTH FRONT STREET
WILMINGTON, NORTH CAROLINA
28401
910.343.1048

PROFESSIONAL SEAL
NOT FOR CONSTRUCTION
NORTH CAROLINA PROFESSIONAL SEAL 028007 ENGINEER JOSEY D. ROWLAND

SUBMITTAL
03-29-2019
75% CONSTRUCTION DOCUMENTS

REVISIONS

KEY PLAN

SHEET
LEVEL 1 PLAN

S-101

DESIGN: Designer
DRAWN: Author
REVIEW: Checker

CN PROJECT NUMBER

4/17/2019 7:51:07 AM
C:\Revit Projects\UNC Wilmington Deck II_r17_csy.grantham.rvt

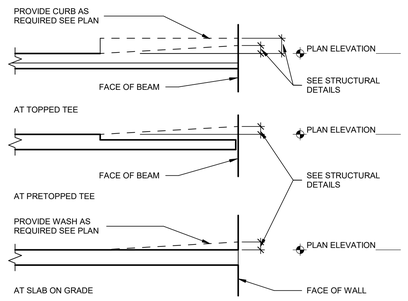

ARCHITECTURAL / STRUCTURAL PLAN ELEVATION KEY (P/C)

NTS

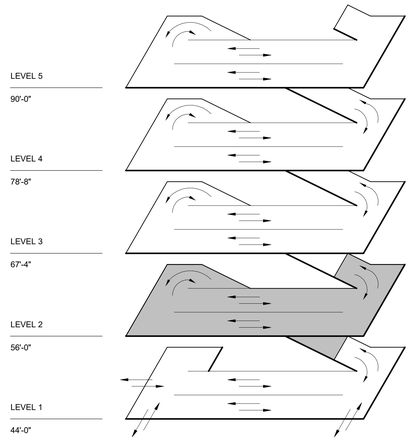

ISOMETRIC

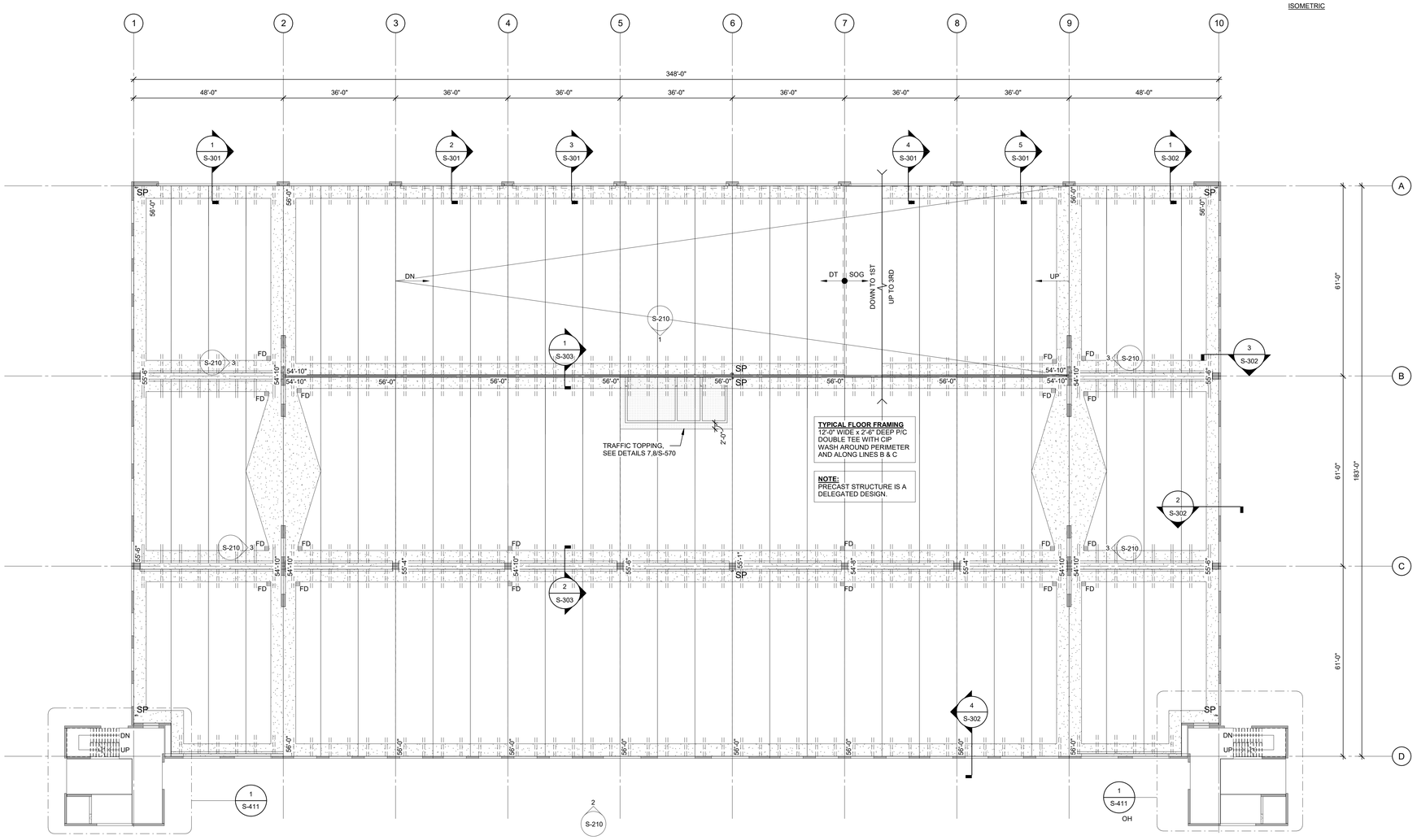

1 LEVEL 2 PLAN

1/16" = 1'-0"

IT SHALL BE THE CONTRACTOR'S RESPONSIBILITY TO VERIFY THAT THERE IS A MINIMUM OF 7'-8" HEADROOM BETWEEN ALL DRIVING SURFACES AND OVERHEAD BEAMS PRIOR TO PLACING CONCRETE.

SHEET NOTES

1. SEE SHEET S-103 FOR TYPICAL SHEET NOTES AND LOCATIONS OF TYPICAL DETAIL REFERENCES (UNLESS NOTED).

LEGEND

- CIP
- PRECAST CONCRETE
- CMU
- CONCRETE WASH / TOPPING
- CIP POUR STRIP
- TRAFFIC TOPPING

UNCW
UNIVERSITY of NORTH CAROLINA WILMINGTON
601 S COLLEGE ROAD
WILMINGTON, NORTH CAROLINA 28403

PARKING DECK II AND SURFACE PARKING (DESIGN-BUILD)
SOUTH CAMPUS - 4965 RIEGEL ROAD

SCO ID NUMBER: 18-19226-01A
CODE: 441828
ITEM: 301

CONTRACTOR
Balfour Beatty Construction

DESIGNER
CLARKNEXSEN
1523 ELIZABETH AVENUE, SUITE 300
CHARLOTTE, NORTH CAROLINA 28204
704.377.8800
CLARK NEXSEN LICENSE NUMBER: C-1028

WALKER CONSULTANTS
13860 Ballantyne Corporate Place
Suite 140
Charlotte, NC 28277
T: 704.247.6230
www.walkerconsultants.com
NC License No. F-0518

McKIM&CREED
CIVIL ENGINEER
243 NORTH FRONT STREET
WILMINGTON, NORTH CAROLINA
28401
910.343.1048

PROFESSIONAL SEAL

NORTH CAROLINA PROFESSIONAL SEAL 028007 ENGINEER JOEY D. ROWLAND
NOT FOR CONSTRUCTION

SUBMITTAL
03-29-2019
75% CONSTRUCTION DOCUMENTS

REVISIONS

KEY PLAN

SHEET
LEVEL 2 PLAN

S-102

DESIGN: Designer
DRAWN: Author
REVIEW: Checker

CN PROJECT NUMBER

4/1/2019 7:51:09 AM
C:\Revit Projects\UNC Wilmington Deck II_r17_jory.grantham.rvt

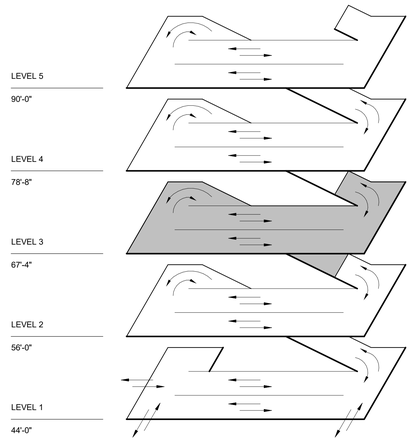

ISOMETRIC

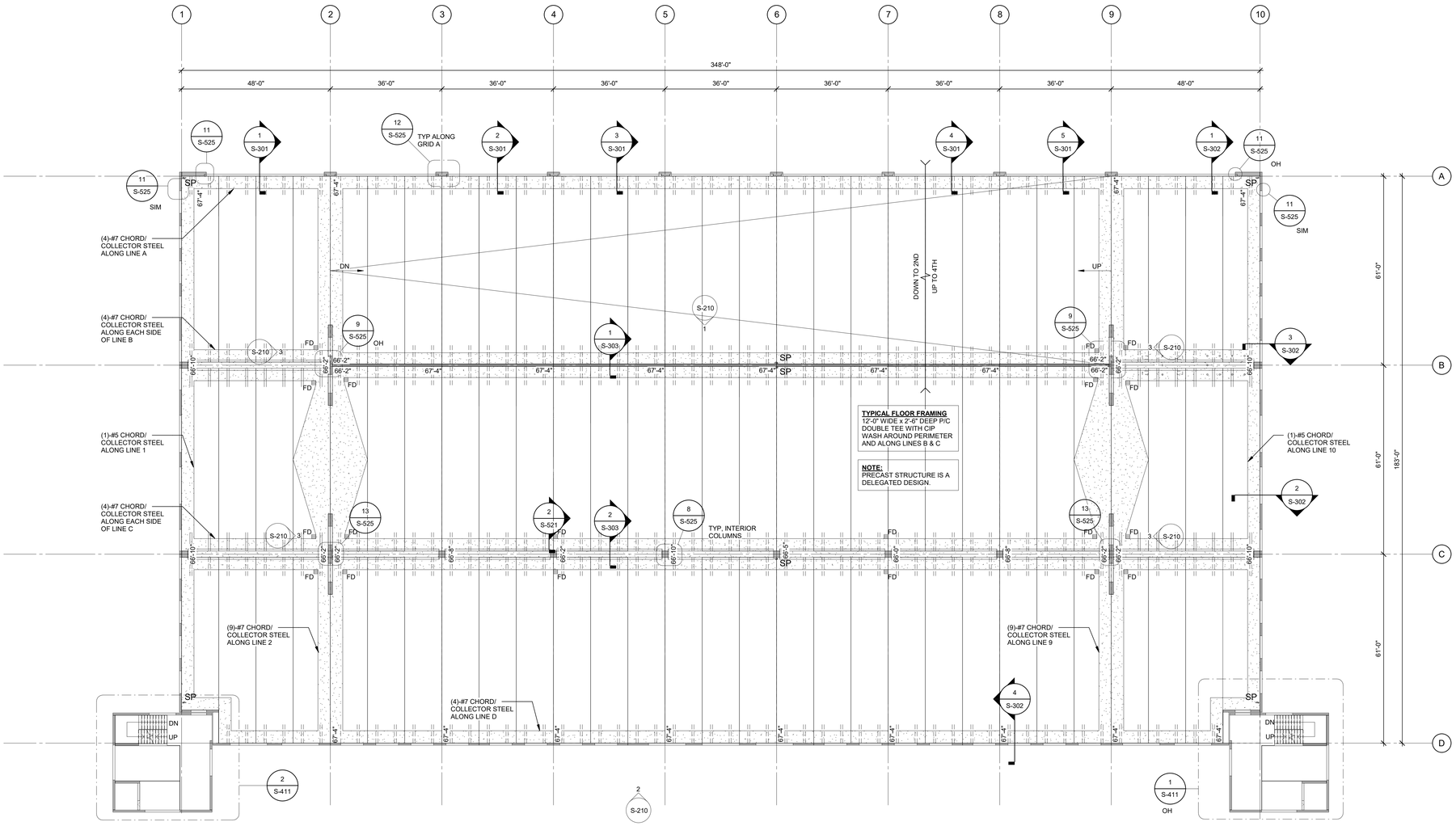

1 LEVEL 3 PLAN

1/16" = 1'-0"

IT SHALL BE THE CONTRACTOR'S RESPONSIBILITY TO VERIFY THAT THERE IS A MINIMUM OF 7'-8" HEADROOM BETWEEN ALL DRIVING SURFACES AND OVERHEAD BEAMS PRIOR TO PLACING CONCRETE.

SHEET NOTES

REFERENCES:

1. GENERAL NOTES. S-001
2. TYPICAL DETAILS S-501
3. PRECAST COLUMN SCHEDULE S-103
4. PRECAST STRUCTURAL WALL ELEVATIONS S-200 SERIES
5. ENLARGED PLANS S-400 SERIES
6. PRECAST BEAM DETAILS, SCHEDULE & NOTES S-525
7. PRECAST TEE DETAILS & NOTES

NOTES:

1. USE STRAIGHT LINE INTERPOLATION FOR FLOOR ELEVATION BETWEEN THOSE INDICATED.
2. PROVIDE TOOLED AND SEALED CONTROL JOINTS IN ALL CIP TOPPING DIRECTLY OVER PRECAST JOINTS, UNO.

LEGEND

- CIP
- PRECAST CONCRETE
- CMU
- CONCRETE WASH / TOPPING
- CIP POUR STRIP
- TRAFFIC TOPPING

UNCW
UNIVERSITY of NORTH CAROLINA WILMINGTON
601 S COLLEGE ROAD
WILMINGTON, NORTH CAROLINA 28403

PARKING DECK II AND SURFACE PARKING (DESIGN-BUILD)
SOUTH CAMPUS - 4965 RIEGEL ROAD

SCO ID NUMBER: 18-19226-01A
CODE: 441828
ITEM: 301

CONTRACTOR
Balfour Beatty Construction

DESIGNER
CLARKNEXSEN
1523 ELIZABETH AVENUE, SUITE 300
CHARLOTTE, NORTH CAROLINA 28204
704.377.8800
CLARK NEXSEN LICENSE NUMBER: C-1028

WALKER CONSULTANTS
13860 Ballantyne Corporate Place
Suite 140
Charlotte, NC 28277
T: 704.247.6230
www.walkerconsultants.com
NC License No. F-0518

McKIM&CREED
CIVIL ENGINEER
243 NORTH FRONT STREET
WILMINGTON, NORTH CAROLINA
28401
910.343.1048

PROFESSIONAL SEAL

NOT FOR CONSTRUCTION
NORTH CAROLINA PROFESSIONAL SEAL 028007 ENGINEER JOSEY D. ROWLAND

SUBMITTAL
03-29-2019
75% CONSTRUCTION DOCUMENTS

REVISIONS

KEY PLAN

SHEET
LEVEL 3 PLAN

S-103

DESIGN: Designer
DRAWN: Author
REVIEW: Checker

CN PROJECT NUMBER

4/17/2019 7:51:19 AM
C:\Revit Projects\UNC Wilmington Deck II_r17_csy.grantham.rvt

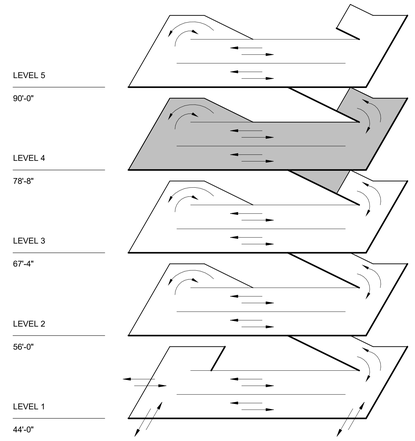

ISOMETRIC

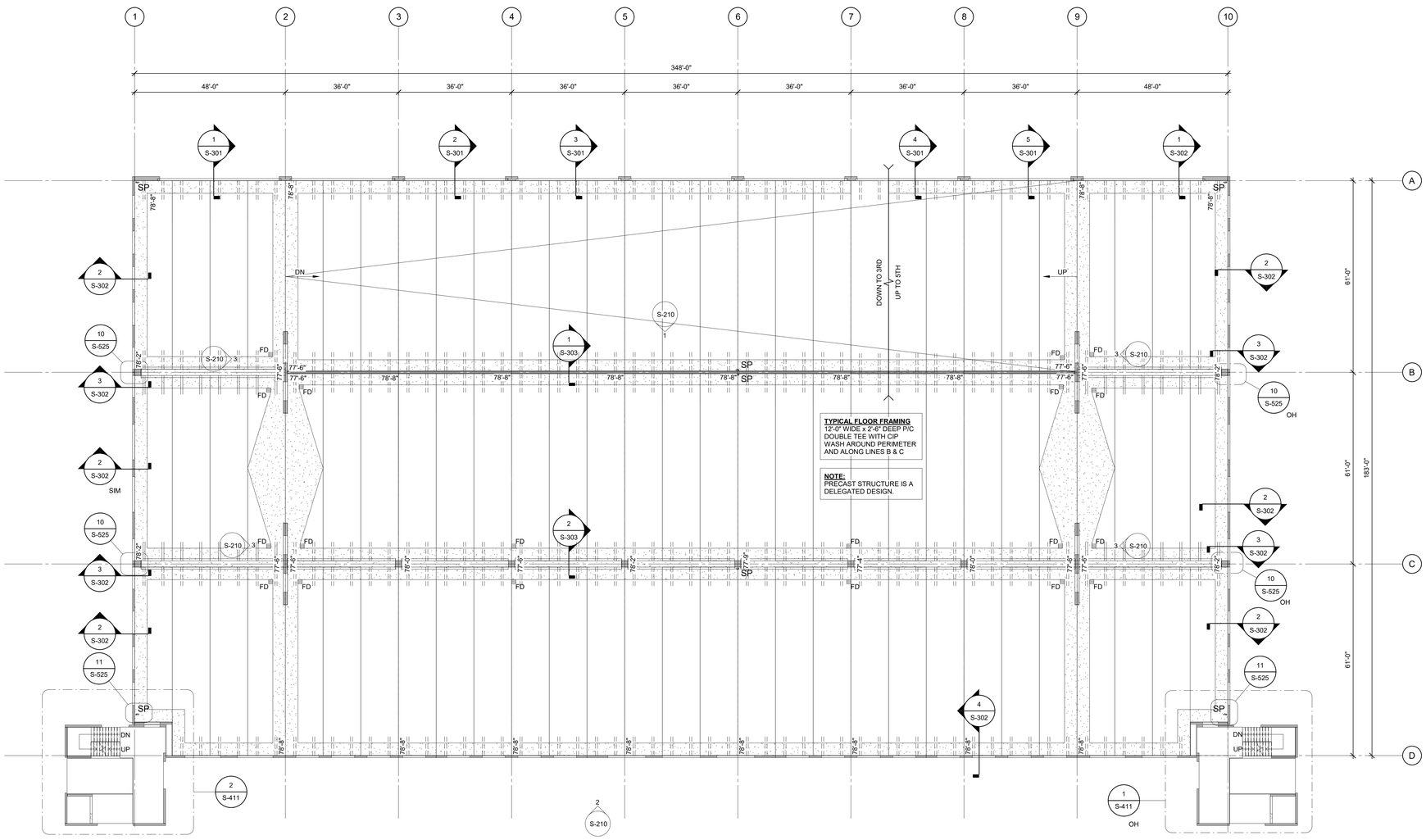

1 LEVEL 4 PLAN

1/16" = 1'-0"

IT SHALL BE THE CONTRACTOR'S RESPONSIBILITY TO VERIFY THAT THERE IS A MINIMUM OF 7'-8" HEADROOM BETWEEN ALL DRIVING SURFACES AND OVERHEAD BEAMS PRIOR TO PLACING CONCRETE.

SHEET NOTES

1. SEE SHEET S-103 FOR TYPICAL SHEET NOTES AND LOCATIONS OF TYPICAL DETAIL REFERENCES (UNLESS NOTED).

LEGEND

- CIP
- PRECAST CONCRETE
- CMU
- CONCRETE WASH / TOPPING
- CIP POUR STRIP
- TRAFFIC TOPPING

UNCW
UNIVERSITY of NORTH CAROLINA WILMINGTON
601 S COLLEGE ROAD
WILMINGTON, NORTH CAROLINA 28403

PARKING DECK II AND SURFACE PARKING (DESIGN-BUILD)
SOUTH CAMPUS - 4965 RIEGEL ROAD

SCO ID NUMBER: 18-19226-01A
CODE: 441828
ITEM: 301

CONTRACTOR
Balfour Beatty Construction

DESIGNER
CLARKNEXSEN
1523 ELIZABETH AVENUE, SUITE 300
CHARLOTTE, NORTH CAROLINA 28204
704·377·8800
CLARK NEXSEN LICENSE NUMBER: C-1028

WALKER CONSULTANTS
13860 Ballantyne Corporate Place
Suite 140
Charlotte, NC 28277
T: 704.247.6230
www.walkerconsultants.com
NC License No. F-0518

McKIM&CREED
CIVIL ENGINEER
243 NORTH FRONT STREET
WILMINGTON, NORTH CAROLINA
28401
910.343.1048

PROFESSIONAL SEAL

NOT FOR CONSTRUCTION
NORTH CAROLINA PROFESSIONAL SEAL 028007 ENGINEER JOEY D. ROWLAND

SUBMITTAL
03-29-2019
75% CONSTRUCTION DOCUMENTS

REVISIONS

KEY PLAN

SHEET
LEVEL 4 PLAN

S-104

DESIGN: Designer
DRAWN: Author
REVIEW: Checker

CN PROJECT NUMBER

4/1/2019 7:51:12 AM
C:\Revit Projects\UNCC Wilmington Deck II_r17_roy grantham.rvt

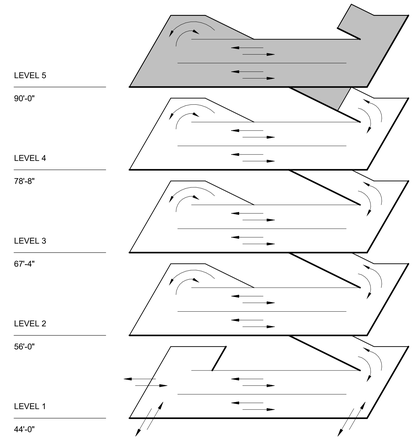

ISOMETRIC

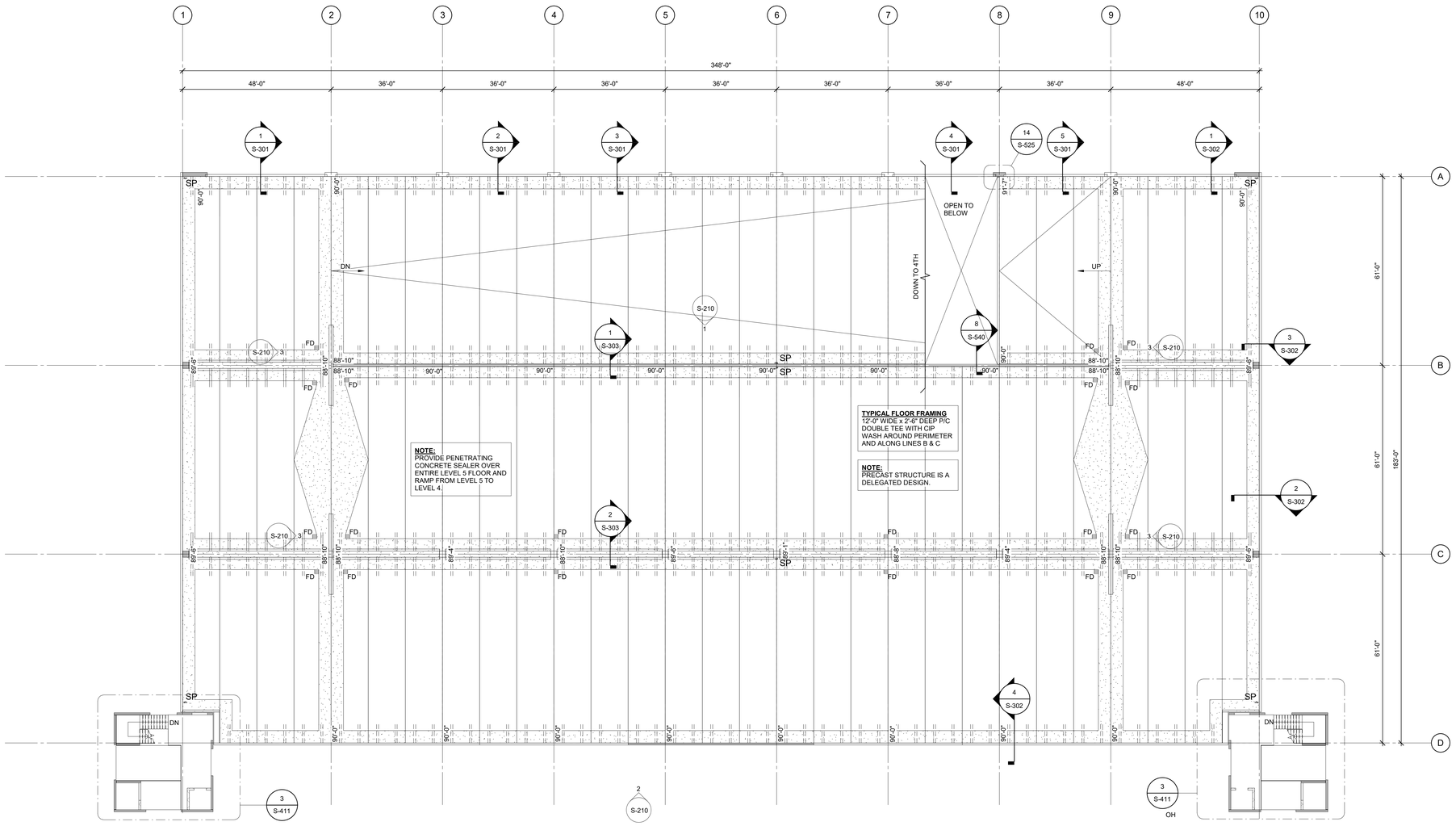

1 LEVEL 5 PLAN

1/16" = 1'-0"

SHEET NOTES

1. SEE SHEET S-103 FOR TYPICAL SHEET NOTES AND LOCATIONS OF TYPICAL DETAIL REFERENCES (UNLESS NOTED).

LEGEND

- CIP
- PRECAST CONCRETE
- CMU
- CONCRETE WASH / TOPPING
- CIP POUR STRIP
- TRAFFIC TOPPING

UNCW
UNIVERSITY of NORTH CAROLINA WILMINGTON
601 S COLLEGE ROAD
WILMINGTON, NORTH CAROLINA 28403

PARKING DECK II AND SURFACE PARKING (DESIGN-BUILD)
SOUTH CAMPUS - 4965 RIEGEL ROAD

SCO ID NUMBER: 18-19226-01A
CODE: 441828
ITEM: 301

CONTRACTOR
Balfour Beatty Construction

DESIGNER
CLARKNEXSEN
1523 ELIZABETH AVENUE, SUITE 300
CHARLOTTE, NORTH CAROLINA 28204
704·377·8800
CLARK NEXSEN LICENSE NUMBER: C-1028

WALKER CONSULTANTS
13860 Ballantyne Corporate Place
Suite 140
Charlotte, NC 28277
T: 704.247.6230
www.walkerconsultants.com
NC License No. F-0518

McKIM&CREED
CIVIL ENGINEER
243 NORTH FRONT STREET
WILMINGTON, NORTH CAROLINA
28401
910.343.1048

PROFESSIONAL SEAL

NORTH CAROLINA PROFESSIONAL SEAL 028007 ENGINEER JOEY D. ROWLAND
NOT FOR CONSTRUCTION

SUBMITTAL
03-29-2019
75% CONSTRUCTION DOCUMENTS

REVISIONS

KEY PLAN

SHEET
LEVEL 5 PLAN

S-105

DESIGN: Designer
DRAWN: Author
REVIEW: Checker

CN PROJECT NUMBER

4/1/2019 7:51:14 AM
C:\Revit Projects\UNC Wilmington Deck II_r17_roy.grantham.rvt

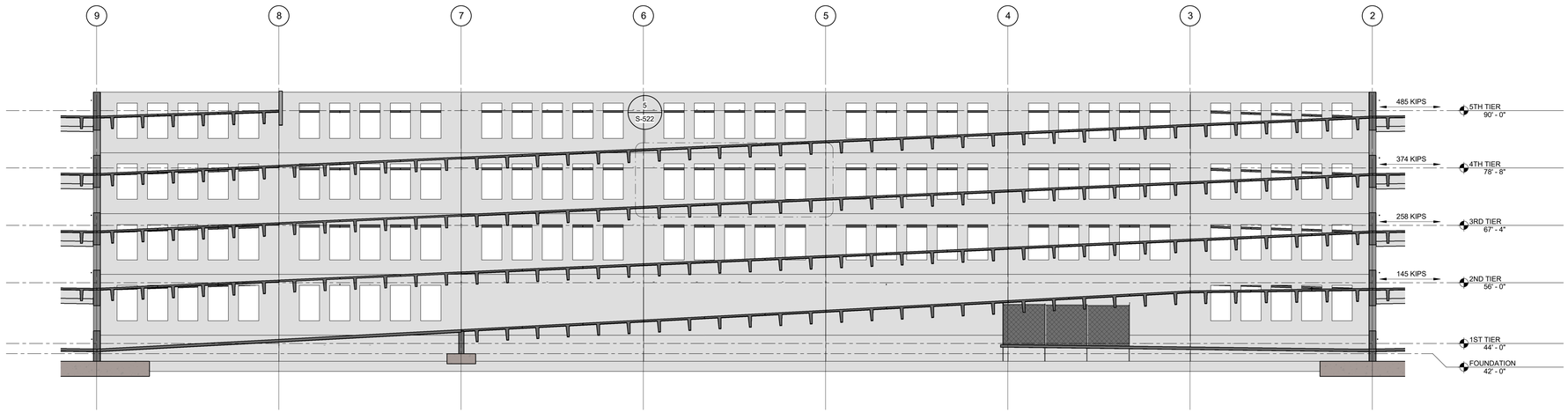

1 LITEWALL ELEVATION

3/32" = 1'-0"

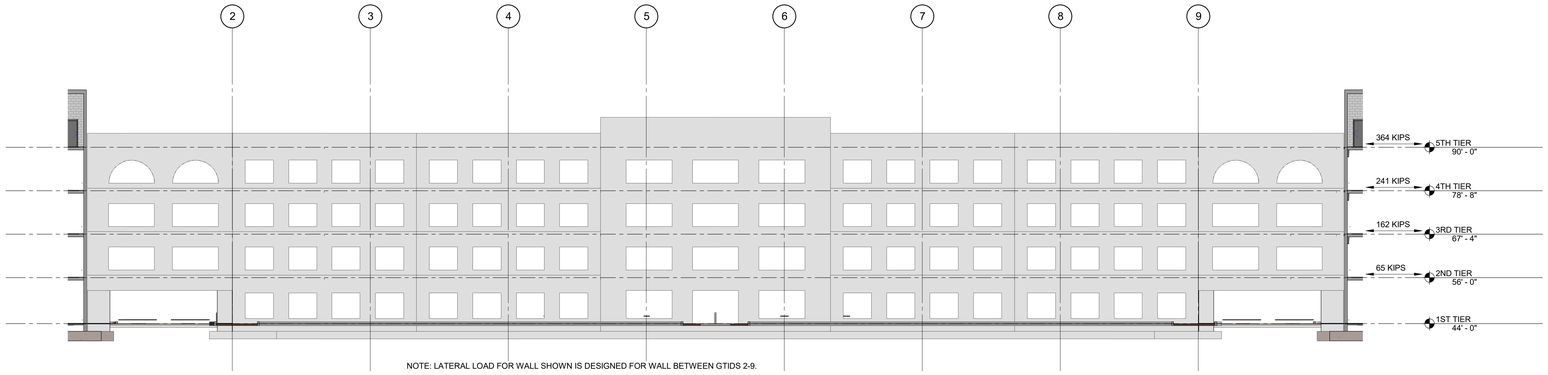

NOTE: LATERAL LOAD FOR WALL SHOWN IS DESIGNED FOR WALL BETWEEN GTIDS 2-9.

2 EXTERIOR LATERAL WALL ELEVATION

1/16" = 1'-0"

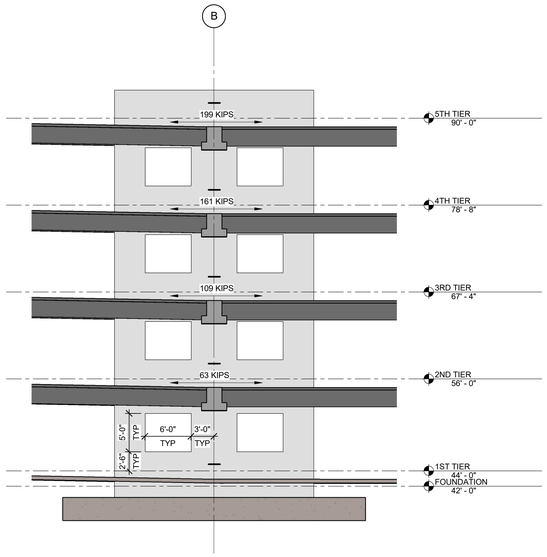

3 SHEAR WALL ELEVATION

1/8" = 1'-0"

SHEET NOTES

REFERENCES:

1. GENERAL NOTES. S-001
2. TYPICAL DETAILS S-501
3. PRECAST COLUMN SCHEDULE S-103
4. PRECAST STRUCTURAL WALL ELEVATIONS S-200 SERIES
5. ENLARGED PLANS S-400 SERIES
6. PRECAST BEAM DETAILS, SCHEDULE & NOTES S-525
7. PRECAST TEE DETAILS & NOTES

PRECAST SHEAR WALL NOTES:

1. FOR GENERAL NOTES, SEE S-001.
2. SHEAR WALL DESIGN IS PERFORMANCE DESIGN AND SHALL INCLUDE SIZE, NUMBER AND LOCATION OF VERTICAL AND HORIZONTAL REINCORCING. DESIGN SHALL ALSO INCLUDE BASE CONNECTIONS, PIECE CONNECTIONS, HAUNCH OR LEDGE REINFORCEMENT, AND SIZE, NUMBER, AND SPACING OF INSERT/COIL ROD (OR OTHER SHEAR TRANSFER) CONNECTIONS INTO POUR STRIPS FOR SHEAR TRANSFER OF LATERAL LOADS. SEE SPECIFICATION 03410 FOR PRECAST CONCRETE.
3. FOR SHEAR WALL SIZES, SEE SHEAR WALL ELEVATIONS 3/S-210 AND STRUCTURAL DETAILS. FOR SHEAR WALL OPENINGS, SEE 1/S-523.
4. FOR EMBEDDED PLATES TO RECEIVE WELDS AS PART OF WELDED CONNECTIONS, SEE 7/S-524.
5. FOR SHEAR WALL BASE CONNECTION, SEE 12/S-524.
6. FOR LATERAL LOADS DUE TO SEISMIC, SEE 2/S-210.
7. PRECAST MANUFACTURER TO CONDUCT THEIR OWN LATERAL ANALYSIS FOR SHEAR WALL MEMBER AND CONNECTION DESIGN.

UNCW
UNIVERSITY of NORTH CAROLINA WILMINGTON
601 S COLLEGE ROAD
WILMINGTON, NORTH CAROLINA 28403

PARKING DECK II AND SURFACE PARKING (DESIGN-BUILD)
SOUTH CAMPUS - 4965 RIEGEL ROAD

SCO ID NUMBER: 18-19226-01A
CODE: 441828
ITEM: 301

CONTRACTOR
Balfour Beatty Construction

DESIGNER
CLARKNEXSEN
1523 ELIZABETH AVENUE, SUITE 300
CHARLOTTE, NORTH CAROLINA 28204
704.377.8800
CLARK NEXSEN LICENSE NUMBER: C-1028

WALKER CONSULTANTS
13860 Ballantyne Corporate Place
Suite 140
Charlotte, NC 28277
T: 704.247.6230
www.walkerconsultants.com
NC License No. F-0518

McKIM&CREED
CIVIL ENGINEER
243 NORTH FRONT STREET
WILMINGTON, NORTH CAROLINA
28401
910.343.1048

PROFESSIONAL SEAL

NORTH CAROLINA PROFESSIONAL SEAL 028007 ENGINEER JOEY D. ROWLAND
NOT FOR CONSTRUCTION

SUBMITTAL

03-29-2019

75% CONSTRUCTION DOCUMENTS

REVISIONS

KEY PLAN

SHEET

SHEAR WALL & LITEWALL ELEVATIONS

S-210

DESIGN: Designer
DRAWN: Author
REVIEW: Checker

CN PROJECT NUMBER

4/1/2019 7:51:19 AM
C:\Revit Projects\UNC Wilmington Deck II_r17_rsy.grantham.rvt

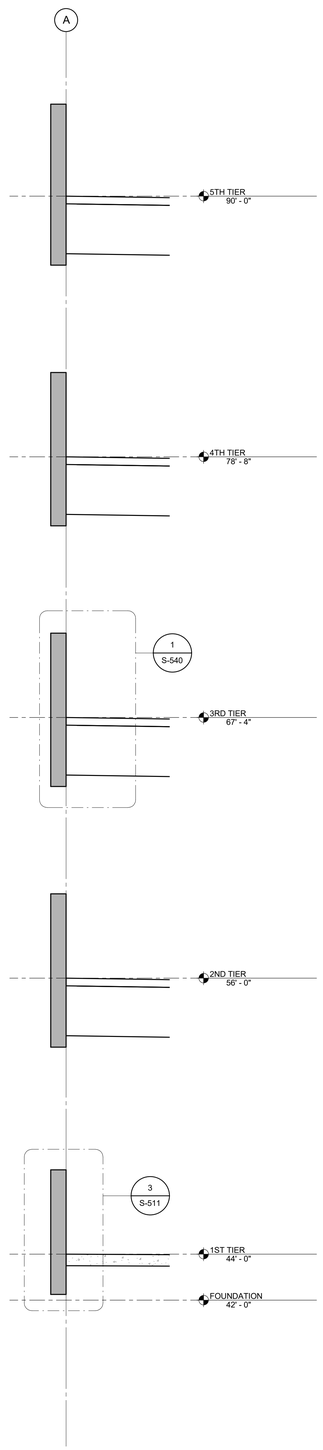

1 WALL SECTION
3/8" = 1'-0"

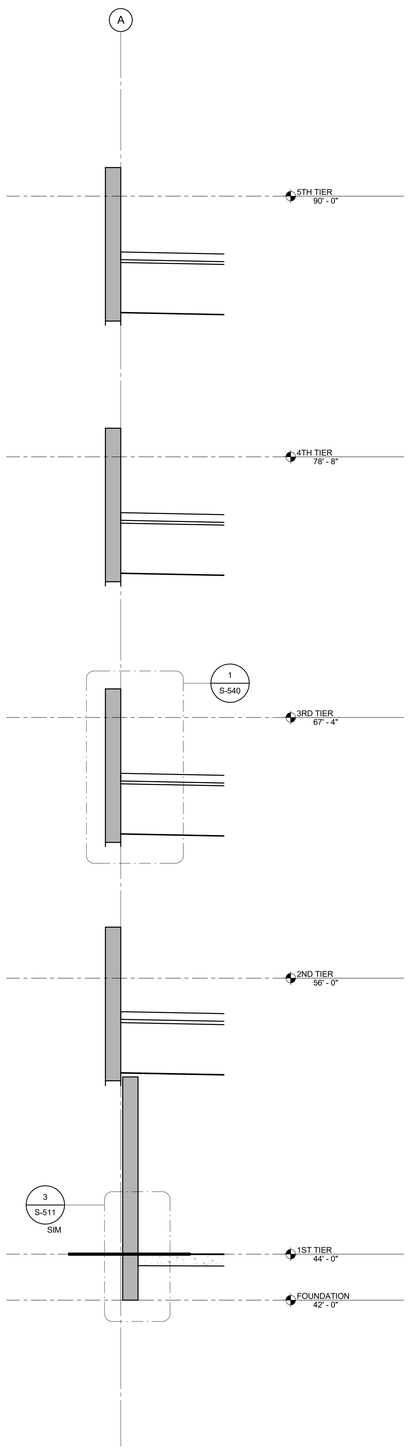

2 WALL SECTION
3/8" = 1'-0"

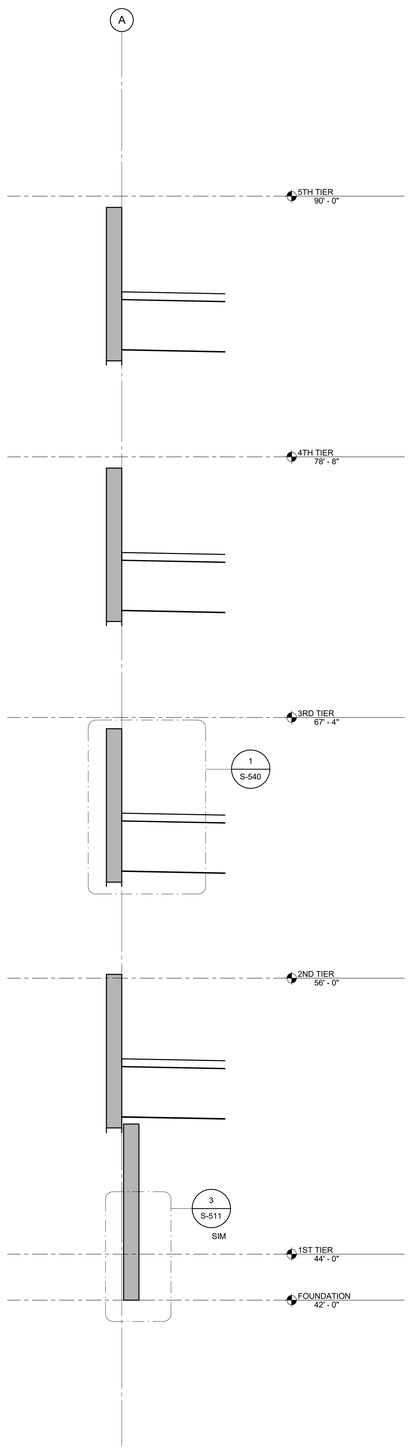

3 WALL SECTION
3/8" = 1'-0"

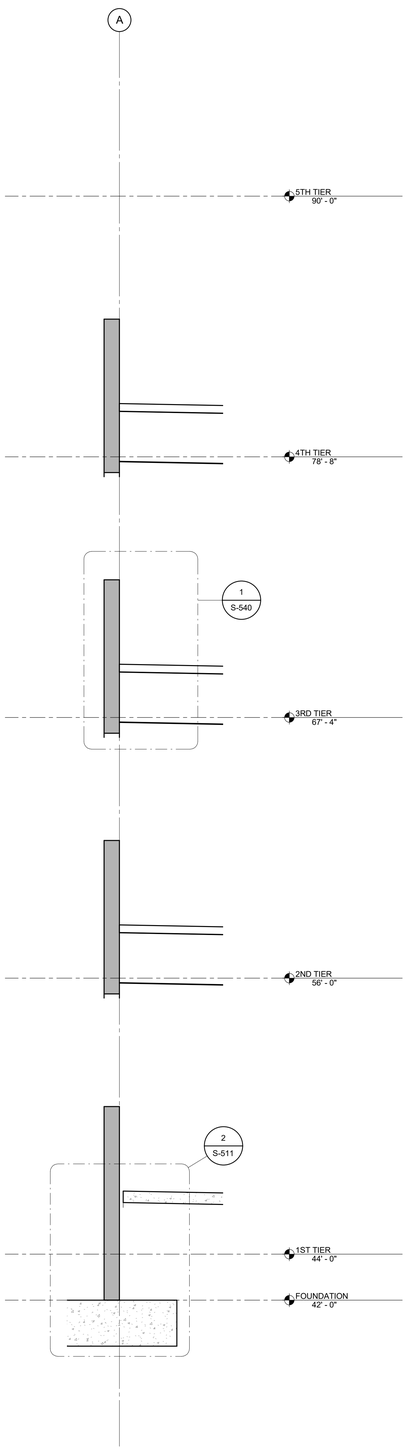

4 WALL SECTION
3/8" = 1'-0"

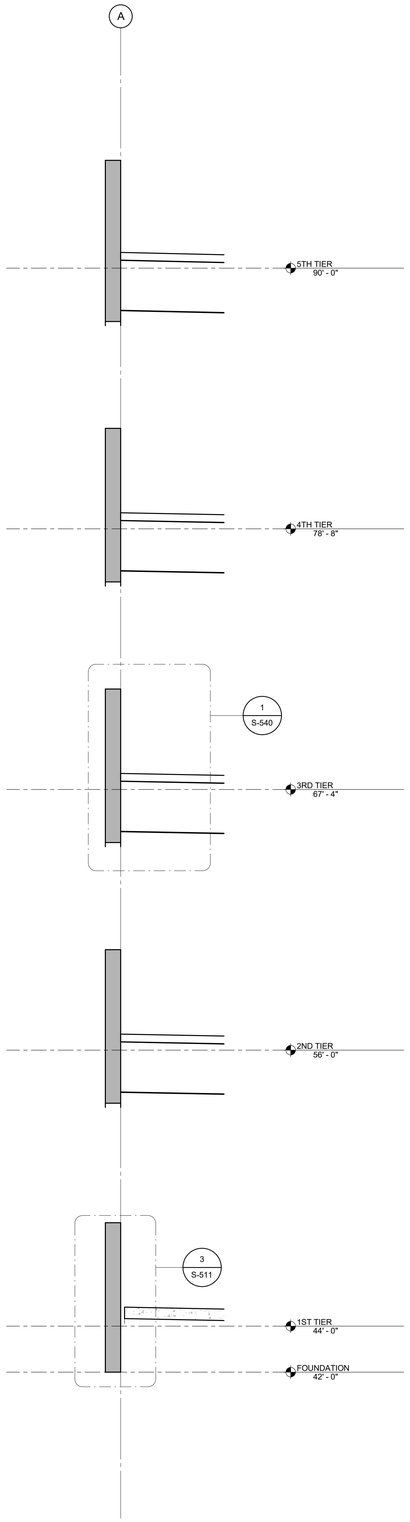

5 WALL SECTION
3/8" = 1'-0"

UNCW
UNIVERSITY of NORTH CAROLINA WILMINGTON
601 S COLLEGE ROAD
WILMINGTON, NORTH CAROLINA 28403

PARKING DECK II AND SURFACE PARKING (DESIGN-BUILD)
SOUTH CAMPUS - 4965 RIEGEL ROAD

SCO ID NUMBER: 18-19226-01A
CODE: 441828
ITEM: 301

CONTRACTOR
Balfour Beatty Construction

DESIGNER
CLARKNEXSEN
1523 ELIZABETH AVENUE, SUITE 300
CHARLOTTE, NORTH CAROLINA 28204
704·377·8800

CLARK NEXSEN LICENSE NUMBER: C-1028

WALKER CONSULTANTS
13860 Ballantyne Corporate Place
Suite 140
Charlotte, NC 28277
T: 704.247.6230
www.walkerconsultants.com
NC License No. F-0518

McKIM&CREED
CIVIL ENGINEER
243 NORTH FRONT STREET
WILMINGTON, NORTH CAROLINA
28401
910.343.1048

PROFESSIONAL SEAL
NOT FOR CONSTRUCTION
NORTH CAROLINA PROFESSIONAL SEAL 028007 ENGINEER JOEY D. ROWLAND

SUBMITTAL
03-29-2019
75% CONSTRUCTION DOCUMENTS

REVISIONS

KEY PLAN

SHEET
BUILDING SECTIONS

S-301

DESIGN: Designer
DRAWN: Author
REVIEW: Checker

CN PROJECT NUMBER

4/17/2019 7:51:20 AM
C:\Revit Projects\UNC Wilmington Deck II_r17_roy.grantham.rvt

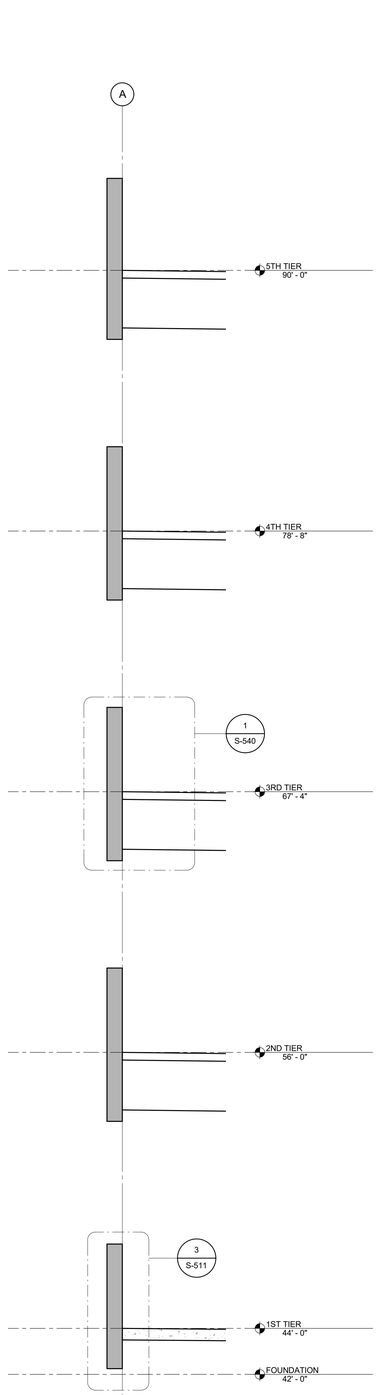

1 WALL SECTION
3/8" = 1'-0"

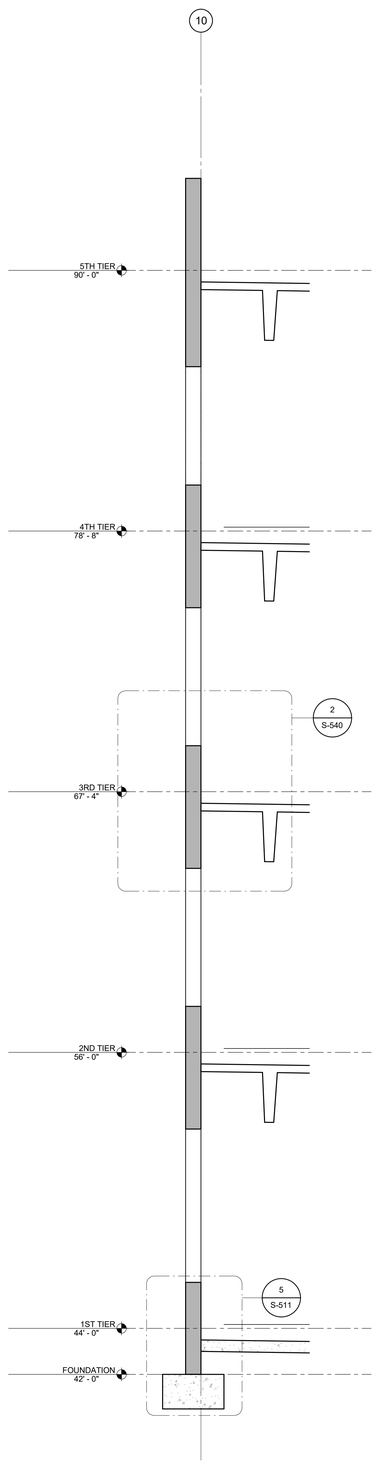

2 WALL SECTION
3/8" = 1'-0"

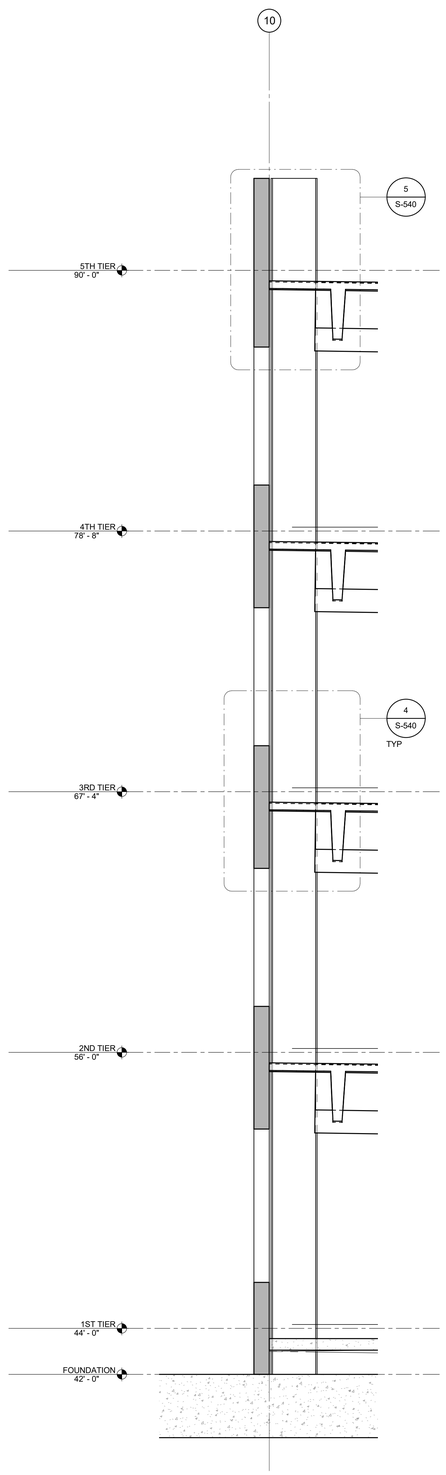

3 WALL SECTION
3/8" = 1'-0"

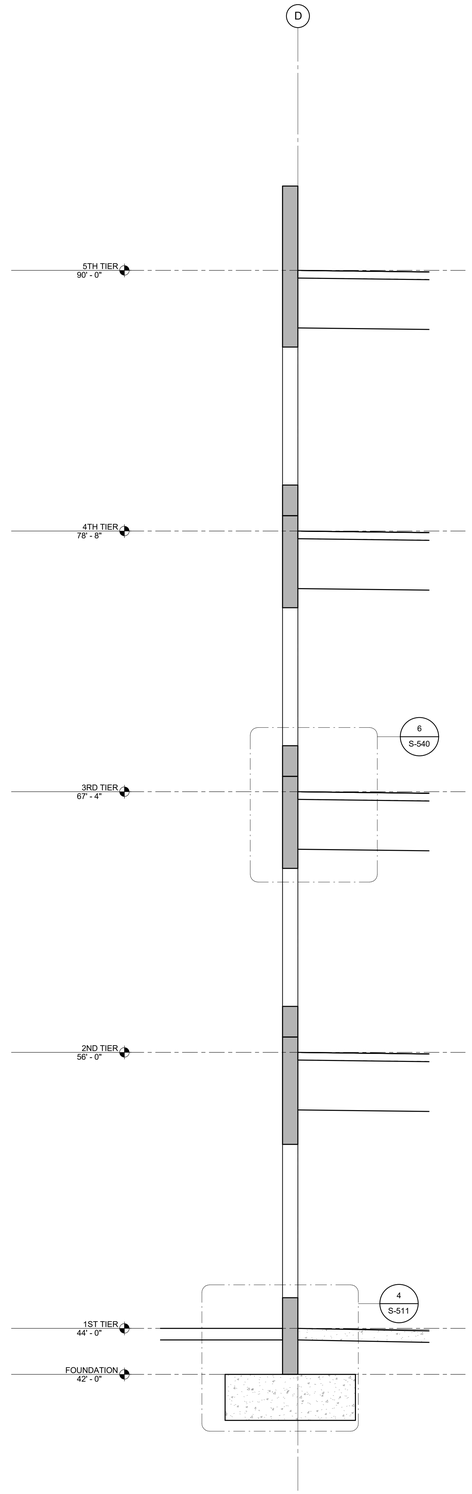

4 WALL SECTION
3/8" = 1'-0"

UNCW
UNIVERSITY of NORTH CAROLINA WILMINGTON
601 S COLLEGE ROAD
WILMINGTON, NORTH CAROLINA 28403

PARKING DECK II AND SURFACE PARKING (DESIGN-BUILD)
SOUTH CAMPUS - 4965 RIEGEL ROAD

SCO ID NUMBER: 18-19226-01A
CODE: 441828
ITEM: 301

CONTRACTOR
Balfour Beatty Construction

DESIGNER
CLARKNEXSEN
1523 ELIZABETH AVENUE, SUITE 300
CHARLOTTE, NORTH CAROLINA 28204
704.377.8800

CLARK NEXSEN LICENSE NUMBER: C-1028

WALKER CONSULTANTS
13860 Ballantyne Corporate Place
Suite 140
Charlotte, NC 28277
T: 704.247.6230
www.walkerconsultants.com
NC License No. F-0518

McKIM&CREED
CIVIL ENGINEER
243 NORTH FRONT STREET
WILMINGTON, NORTH CAROLINA
28401
910.343.1048

PROFESSIONAL SEAL
NORTH CAROLINA PROFESSIONAL SEAL 028007 ENGINEER JOEY D. ROWLAND
NOT FOR CONSTRUCTION

SUBMITTAL
03-29-2019
75% CONSTRUCTION DOCUMENTS

REVISIONS

KEY PLAN

SHEET
BULDING SECTIONS

S-302

DESIGN: Designer
DRAWN: Author
REVIEW: Checker

CN PROJECT NUMBER

4/1/2019 7:51:21 AM
C:\Revit Projects\UNC Wilmington Deck II_r17_roy.grantham.rvt

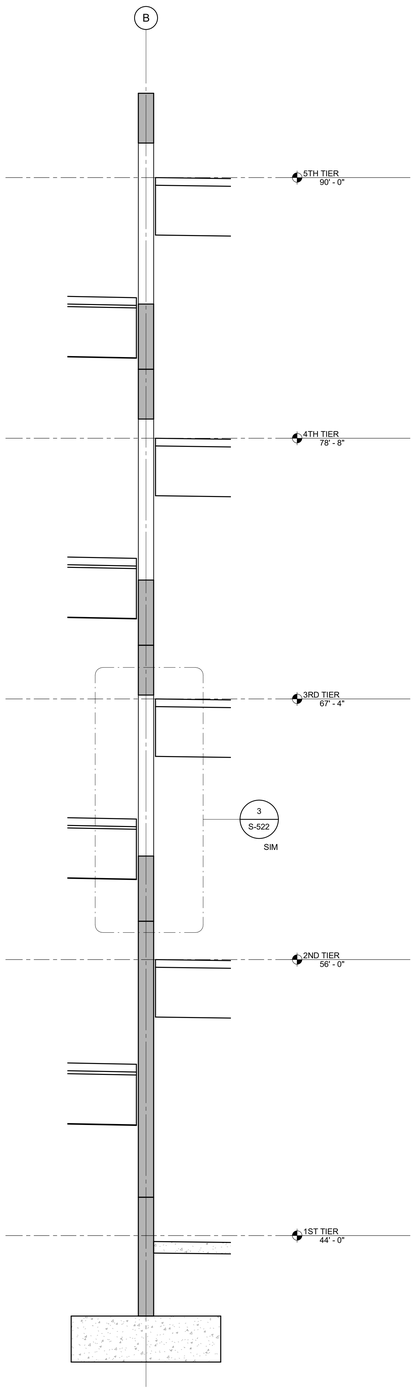

1 WALL SECTION
3/8" = 1'-0"

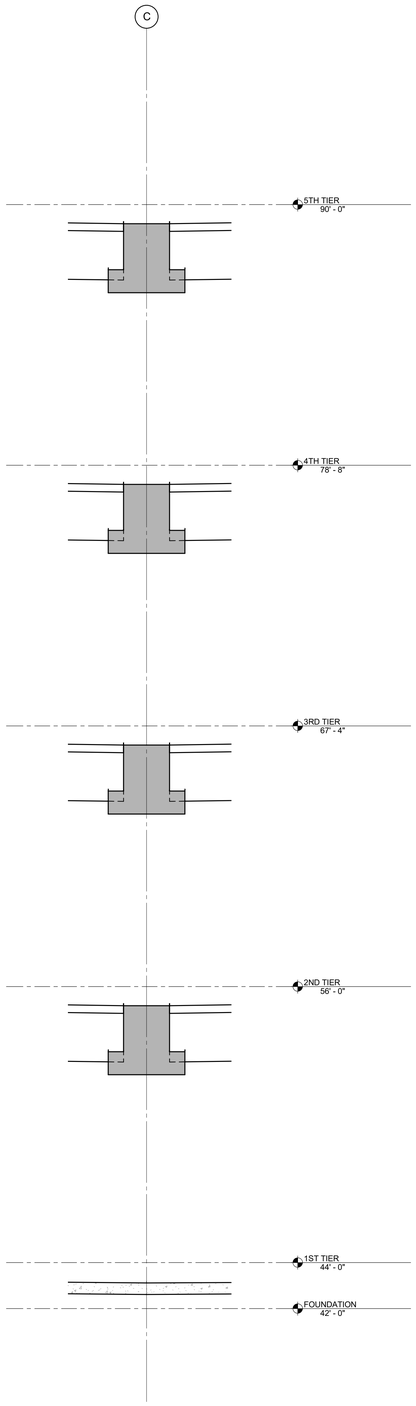

2 WALL SECTION
3/8" = 1'-0"

UNCW
UNIVERSITY of NORTH CAROLINA WILMINGTON
601 S COLLEGE ROAD
WILMINGTON, NORTH CAROLINA 28403

PARKING DECK II AND SURFACE PARKING (DESIGN-BUILD)
SOUTH CAMPUS - 4965 RIEGEL ROAD

SCO ID NUMBER: 18-19226-01A
CODE: 441828
ITEM: 301

CONTRACTOR
Balfour Beatty Construction

DESIGNER
CLARKNEXSEN
1523 ELIZABETH AVENUE, SUITE 300
CHARLOTTE, NORTH CAROLINA 28204
704·377·8800

CLARK NEXSEN LICENSE NUMBER: C-1028

WALKER CONSULTANTS
13860 Ballantyne Corporate Place
Suite 140
Charlotte, NC 28277
T: 704.247.6230
www.walkerconsultants.com
NC License No. F-0518

McKIM&CREED
CIVIL ENGINEER
243 NORTH FRONT STREET
WILMINGTON, NORTH CAROLINA
28401
910.343.1048

PROFESSIONAL SEAL
NOT FOR CONSTRUCTION
NORTH CAROLINA PROFESSIONAL SEAL 028007 ENGINEER JOEY D. ROWLAND

SUBMITTAL
03-29-2019
75% CONSTRUCTION DOCUMENTS

REVISIONS

KEY PLAN

SHEET
BUILDING SECTIONS

S-303

DESIGN: Designer
DRAWN: Author
REVIEW: Checker

CN PROJECT NUMBER

4/11/2019 7:51:22 AM
C:\Revit Projects\UNC Wilmington Deck II_v17_roy.grantham.rvt

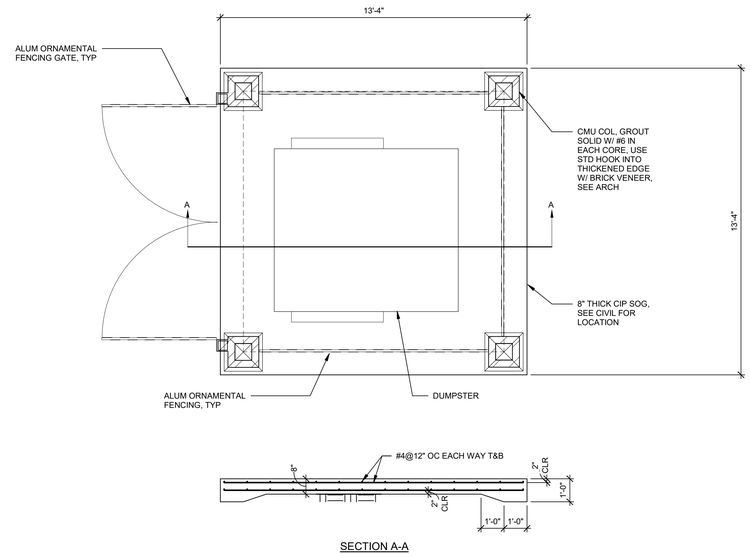

2 DUMPSTER PAD

3/8" = 1'-0"

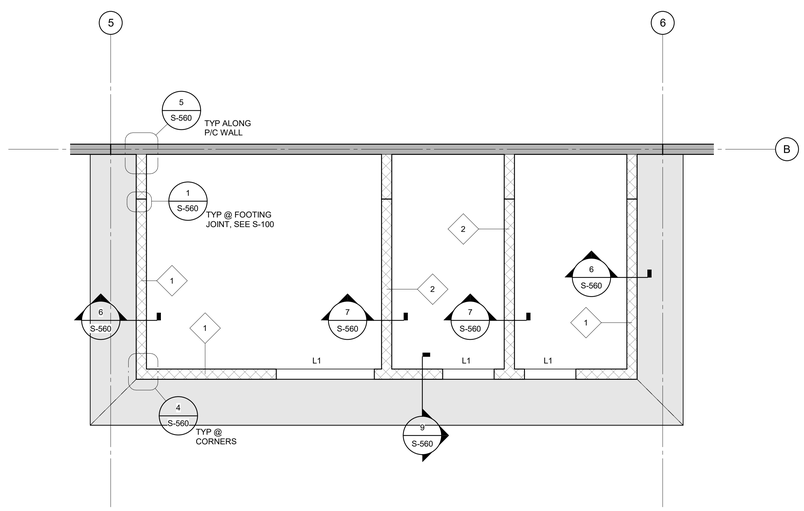

1 ENLARGED PLAN

1/4" = 1'-0"

SHEET NOTES

REFERENCES:

1. GENERAL NOTES. S-001
2. TYPICAL DETAILS S-501
3. PRECAST COLUMN SCHEDULE S-103
4. PRECAST STRUCTURAL WALL ELEVATIONS S-200 SERIES
5. ENLARGED PLANS S-400 SERIES
6. PRECAST BEAM DETAILS, SCHEDULE & NOTES S-525
7. PRECAST TEE DETAILS & NOTES

NOTES:

1. FOR CMU REBAR, SEE DETAIL 10/S-560.
2. FOR LINTEL INFORMATION, SEE DETAIL 8/S-560.

LEGEND

X CMU WALL TYPE, SEE 10/S-560

LX LINTEL TYPE, SEE 8/S-560

UNCW
UNIVERSITY of NORTH CAROLINA WILMINGTON
601 S COLLEGE ROAD
WILMINGTON, NORTH CAROLINA 28403

PARKING DECK II AND SURFACE PARKING (DESIGN-BUILD)
SOUTH CAMPUS - 4965 RIEGEL ROAD

SCO ID NUMBER: 18-19226-01A
CODE: 441828
ITEM: 301

CONTRACTOR
Balfour Beatty Construction

DESIGNER
CLARKNEXSEN
1523 ELIZABETH AVENUE, SUITE 300
CHARLOTTE, NORTH CAROLINA 28204
704.377.8800

CLARK NEXSEN LICENSE NUMBER: C-1028

WALKER CONSULTANTS
13860 Ballantyne Corporate Place
Suite 140
Charlotte, NC 28277
T: 704.247.6230
www.walkerconsultants.com
NC License No. F-0518

McKIM&CREED
CIVIL ENGINEER
243 NORTH FRONT STREET
WILMINGTON, NORTH CAROLINA
28401
910.343.1048

PROFESSIONAL SEAL
NORTH CAROLINA PROFESSIONAL SEAL 028007 ENGINEER JOEY D. ROWLAND
NOT FOR CONSTRUCTION

SUBMITTAL
03-29-2019
75% CONSTRUCTION DOCUMENTS

REVISIONS

KEY PLAN

SHEET
(MISC) ENLARGED PLANS

S-401

DESIGN: Designer
DRAWN: Author
REVIEW: Checker

CN PROJECT NUMBER

4/17/2019 7:51:22 AM
C:\Revit Projects\UNC Wilmington Deck II_r17_rsy.grantham.rvt

	FOUNDATION LOAD TAKEDOWN				
	GRAVITY LOAD (KLF)			MOMENT (KIP-FT)	
LABEL	DEAD	LIVE	SNOW	SEISMIC	WIND
WALL 1	15.0	3.6	0.2	430	580
WALL 2	26.1	9.5	0.5	1430	1920
WALL 3	30.3	11.7	0.6	700	950
WALL 4	8.6	0.0	0.0	830	970
WALL 5	8.6	0.0	0.0	150	170
WALL 6	8.6	0.0	0.0	1480	1690
WALL 7	21.1	6.9	0.4	380	450
WALL 8	20.5	5.1	0.4	480	540
WALL 9	14.4	2.0	0.2	700	950
WALL 10	8.6	0.0	0.0	1480	1690
WALL 11	8.7	3.5	0.5	N/A	N/A

NOTE: MOMENTS ARE ULTIMATE AND REVERSIBLE.

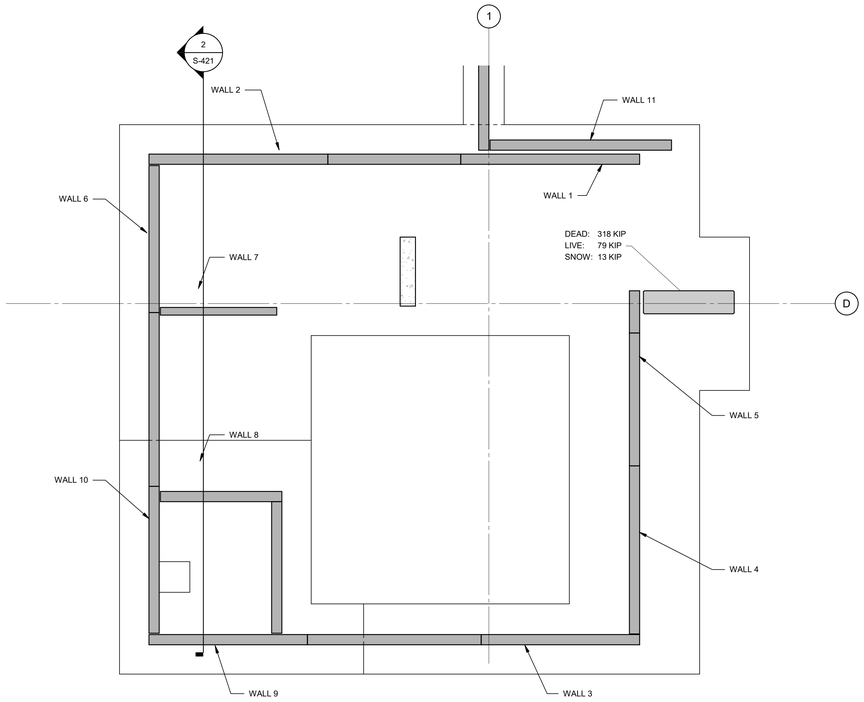

2 FOUNDATION LOAD PLAN

1/4" = 1'-0"

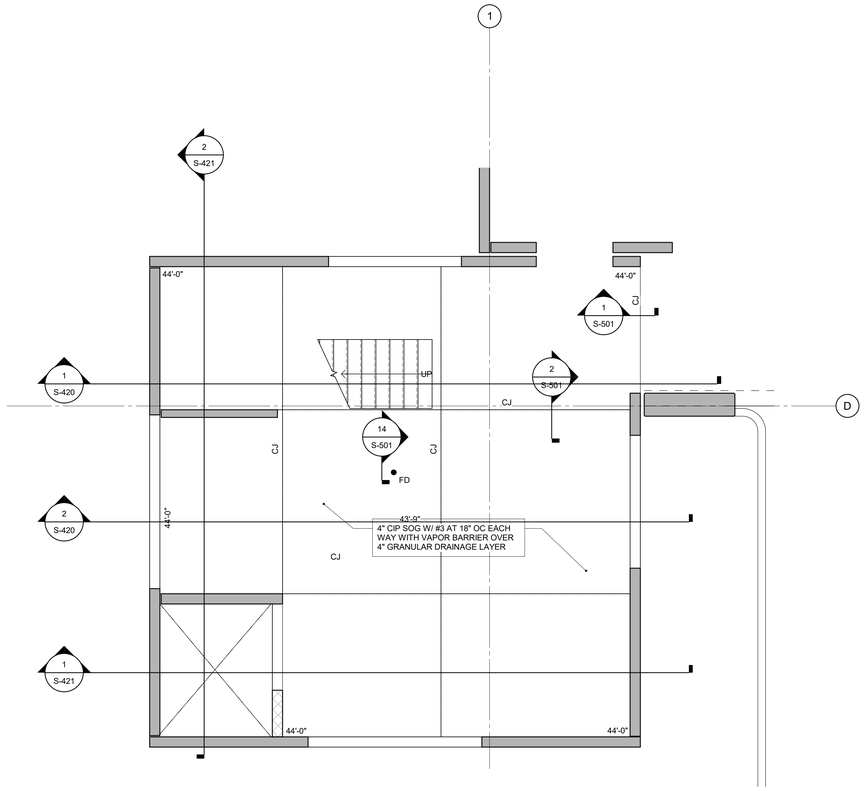

4 LEVEL 1 PLAN

1/4" = 1'-0"

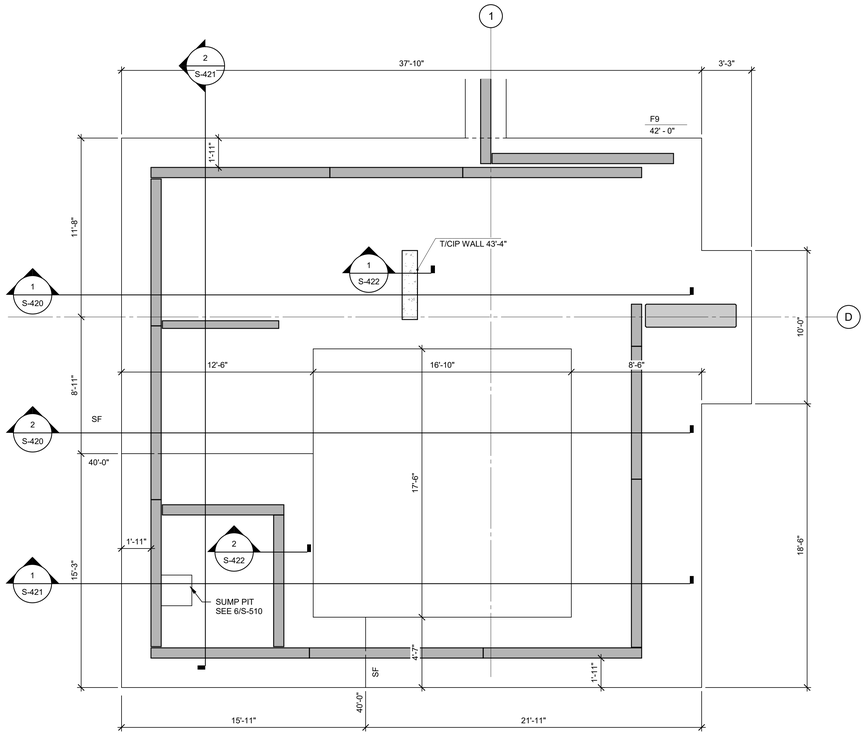

1 FOUNDATION PLAN

1/4" = 1'-0"

SHEET NOTES

REFERENCES:

1. GENERAL NOTES. S-001
2. TYPICAL DETAILS S-501
3. PRECAST COLUMN SCHEDULE S-103
4. PRECAST STRUCTURAL WALL ELEVATIONS S-200 SERIES
5. ENLARGED PLANS S-400 SERIES
6. PRECAST BEAM DETAILS, SCHEDULE & NOTES S-525
7. PRECAST TEE DETAILS & NOTES

NOTES:

1. USE STRAIGHT LINE INTERPOLATION FOR FLOOR ELEVATION BETWEEN THOSE INDICATED.
2. PROVIDE TOOLED AND SEALED CONTROL JOINTS IN ALL CIP TOPPING DIRECTLY OVER PRECAST JOINTS, UNO.
3. FOR LATERAL LOADS DUE TO WIND & SEISMIC, SEE TABLE BELOW.
4. PRECAST MANUFACTURER TO CONDUCT THEIR OWN LATERAL ANALYSIS FOR WALL MEMBER AND CONNECTION DESIGN.

STAIR TOWER LATERAL LOAD SCHEDULE		
CORE 1 & CORE 2		
MARK	SEISMIC ULTIMATE (1.0E) [KIPS]	WIND ULTIMATE (1.0W) [KIPS]
ROOF	29	34
LEVEL 5	23	25
LEVEL 4	17	25
LEVEL 3	12	24
LEVEL 2	7	26

LEGEND

- CIP
- PRECAST CONCRETE
- CMU
- CONCRETE WASH / TOPPING
- CIP POUR STRIP
- TRAFFIC TOPPING

UNCW
UNIVERSITY of NORTH CAROLINA WILMINGTON
601 S COLLEGE ROAD
WILMINGTON, NORTH CAROLINA 28403

PARKING DECK II AND SURFACE PARKING (DESIGN-BUILD)
SOUTH CAMPUS - 4965 RIEGEL ROAD

SCO ID NUMBER: 18-19226-01A
CODE: 441828
ITEM: 301

CONTRACTOR
Balfour Beatty Construction

DESIGNER
CLARKNEXSEN
1523 ELIZABETH AVENUE, SUITE 300
CHARLOTTE, NORTH CAROLINA 28204
704.377.8800
CLARK NEXSEN LICENSE NUMBER: C-1028

WALKER CONSULTANTS
13860 Ballantyne Corporate Place
Suite 140
Charlotte, NC 28277
T: 704.247.6230
www.walkerconsultants.com
NC License No. F-0518

McKIM&CREED
CIVIL ENGINEER
243 NORTH FRONT STREET
WILMINGTON, NORTH CAROLINA
28401
910.343.1048

PROFESSIONAL SEAL

NOT FOR CONSTRUCTION
NORTH CAROLINA PROFESSIONAL SEAL 028007 ENGINEER JOEY D. ROWLAND

SUBMITTAL
03-29-2019
75% CONSTRUCTION DOCUMENTS

REVISIONS

KEY PLAN

SHEET
STAIR TOWER NO. 1
ENLARGED PLANS

S-410

DESIGN: Designer
DRAWN: Author
REVIEW: Checker

CN PROJECT NUMBER

4/1/2019 7:51:23 AM
C:\Revit Projects\UNC Wilmington Deck II_r17_ory.grantham.rvt

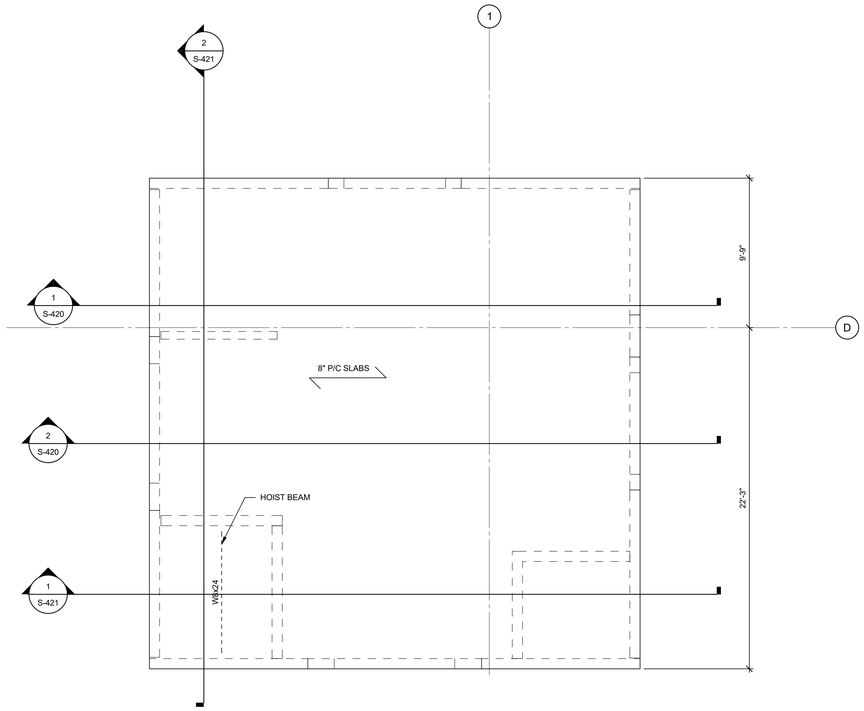

4 ROOF PLAN
1/4" = 1'-0"

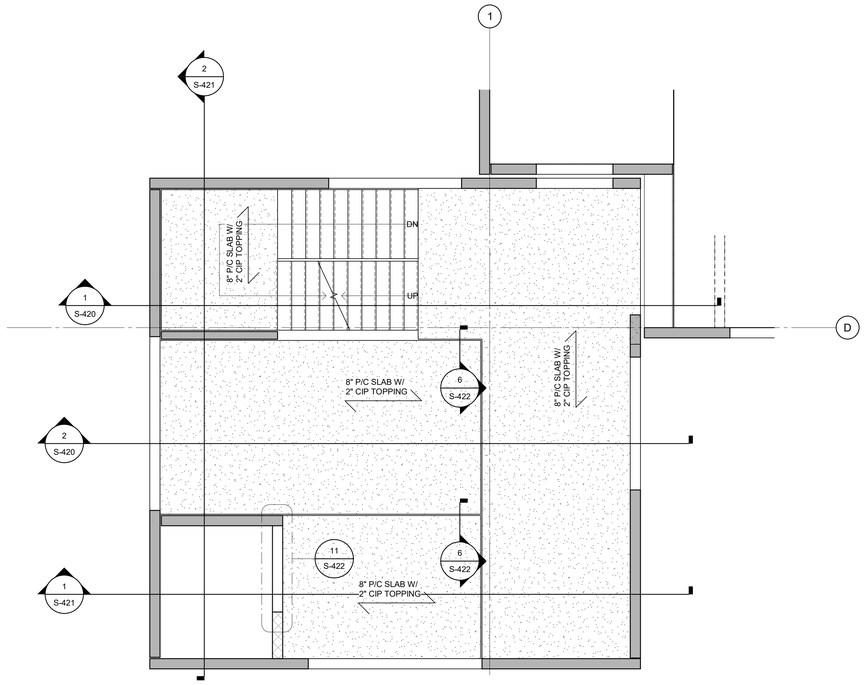

2 TYPICAL LEVEL PLAN
1/4" = 1'-0"

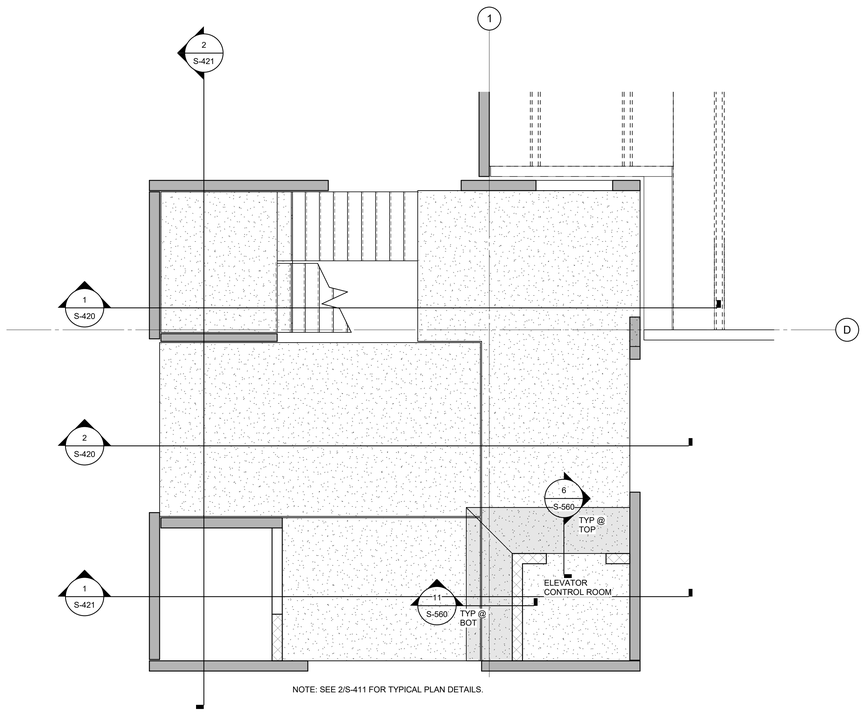

3 LEVEL 5 PLAN
1/4" = 1'-0"

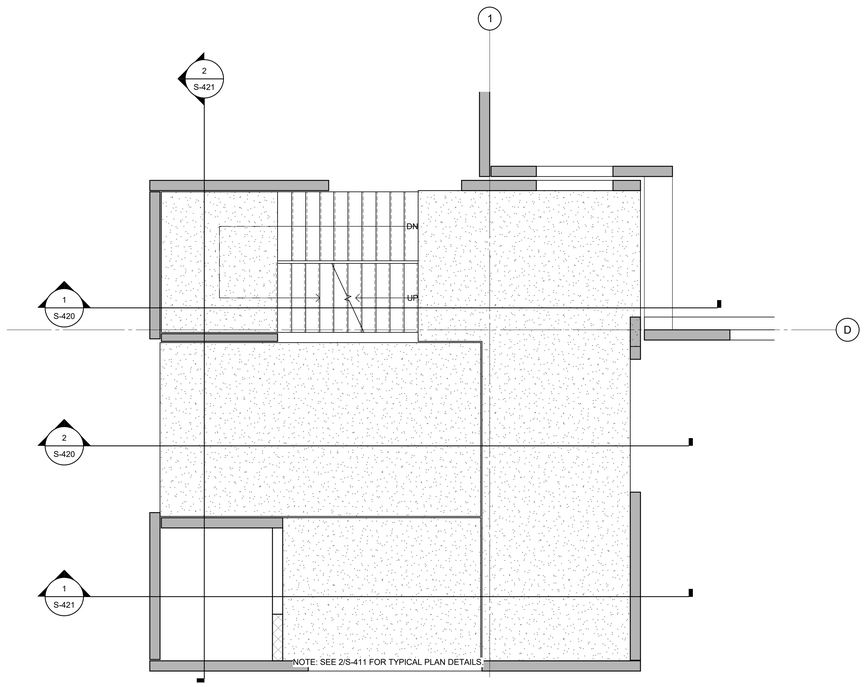

1 LEVEL 2 PLAN
1/4" = 1'-0"

UNCW
UNIVERSITY of NORTH CAROLINA WILMINGTON
601 S COLLEGE ROAD
WILMINGTON, NORTH CAROLINA 28403

PARKING DECK II AND SURFACE
PARKING (DESIGN-BUILD)
SOUTH CAMPUS - 4965 RIEGEL ROAD

SCO ID NUMBER: 18-19226-01A
CODE: 441828
ITEM: 301

CONTRACTOR
Balfour Beatty
Construction

DESIGNER
CLARKNEXSEN
1523 ELIZABETH AVENUE, SUITE 300
CHARLOTTE, NORTH CAROLINA 28204
704·377·8800

CLARK NEXSEN LICENSE NUMBER: C-1028

WALKER CONSULTANTS
13860 Ballantyne Corporate Place
Suite 140
Charlotte, NC 28277
T: 704.247.6230
www.walkerconsultants.com
NC License No. F-0518

McKIM&CREED
CIVIL ENGINEER
243 NORTH FRONT STREET
WILMINGTON, NORTH CAROLINA
28401
910.343.1048

PROFESSIONAL SEAL
NOT FOR CONSTRUCTION
NORTH CAROLINA PROFESSIONAL SEAL 028007 ENGINEER JOEY D. ROWLAND

SUBMITTAL
03-29-2019
75% CONSTRUCTION DOCUMENTS

REVISIONS

KEY PLAN

SHEET
STAIR TOWER NO. 1
ENLARGED PLANS

S-411

DESIGN: Designer
DRAWN: Author
REVIEW: Checker

CN PROJECT NUMBER

4/1/2019 7:51:24 AM
C:\Revit Projects\UNC Wilmington Deck II_r17_ray.grantham.rvt

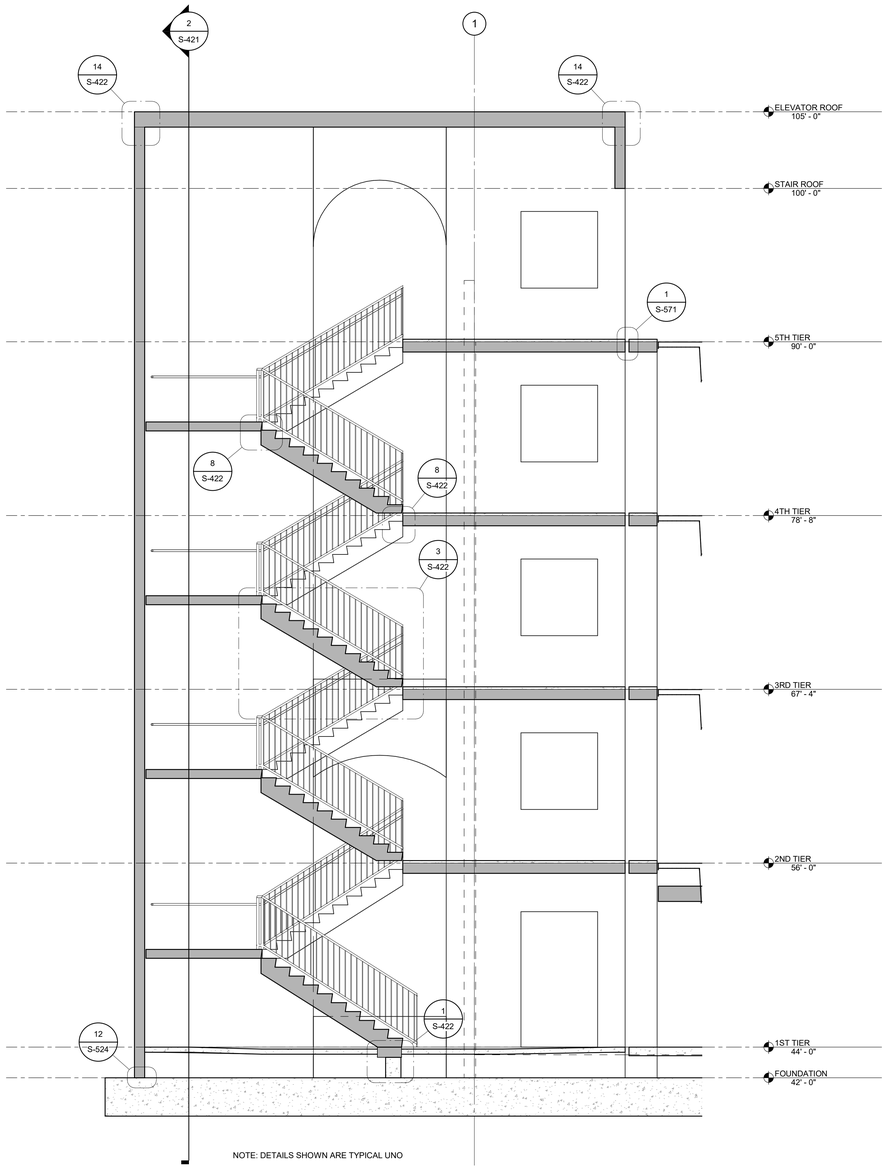

NOTE: DETAILS SHOWN ARE TYPICAL UNO

1 STAIR TOWER SECTION
1/4" = 1'-0"

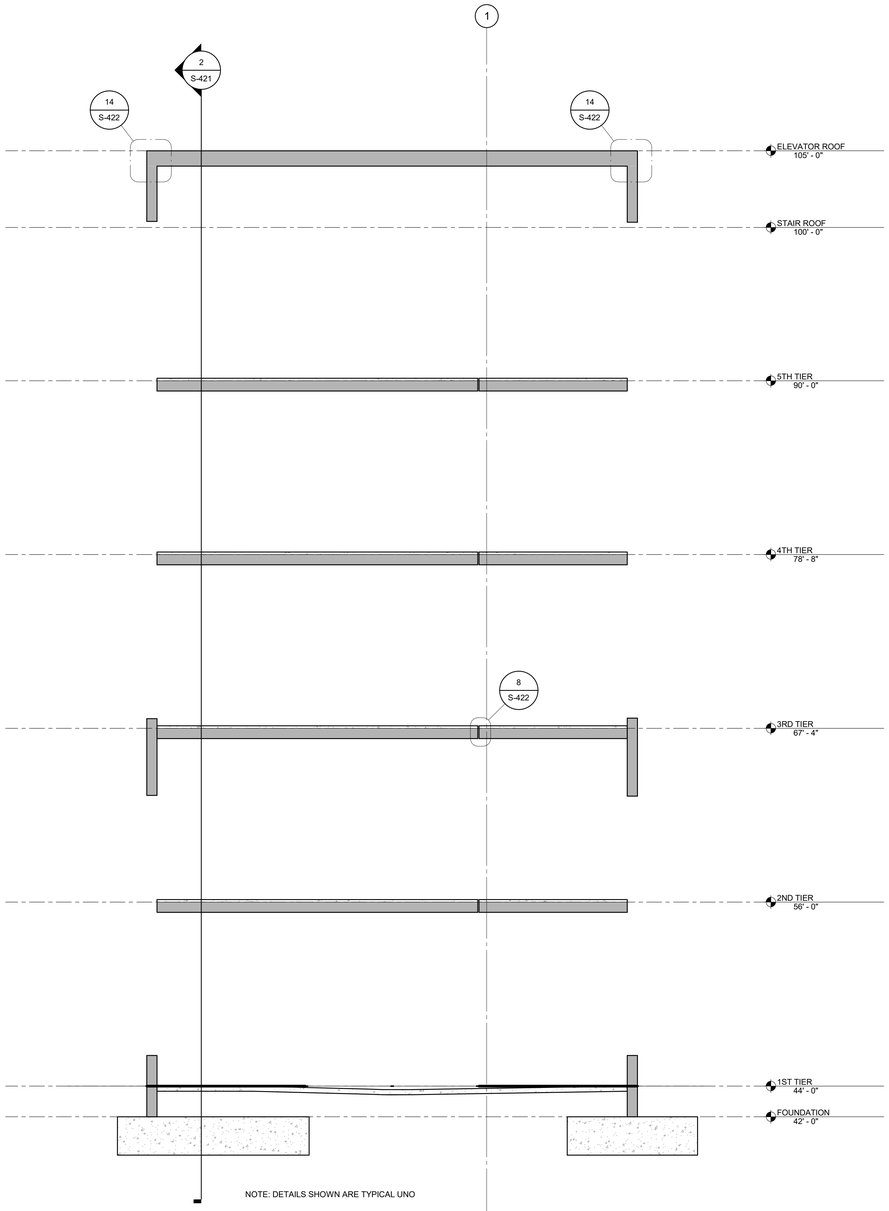

NOTE: DETAILS SHOWN ARE TYPICAL UNO

2 STAIR TOWER SECTION
1/4" = 1'-0"

UNCW
UNIVERSITY of NORTH CAROLINA WILMINGTON
601 S COLLEGE ROAD
WILMINGTON, NORTH CAROLINA 28403

PARKING DECK II AND SURFACE PARKING (DESIGN-BUILD)
SOUTH CAMPUS - 4965 RIEGEL ROAD

SCO ID NUMBER: 18-19226-01A
CODE: 441828
ITEM: 301

CONTRACTOR
Balfour Beatty Construction

DESIGNER
CLARKNEXSEN
1523 ELIZABETH AVENUE, SUITE 300
CHARLOTTE, NORTH CAROLINA 28204
704·377·8800

CLARK NEXSEN LICENSE NUMBER: C-1028

WALKER CONSULTANTS
13860 Ballantyne Corporate Place
Suite 140
Charlotte, NC 28277
T: 704.247.6230
www.walkerconsultants.com
NC License No. F-0518

McKIM&CREED
CIVIL ENGINEER
243 NORTH FRONT STREET
WILMINGTON, NORTH CAROLINA
28401
910.343.1048

PROFESSIONAL SEAL
NORTH CAROLINA PROFESSIONAL SEAL 028007 ENGINEER JOEY D. ROWLAND
NOT FOR CONSTRUCTION

SUBMITTAL
03-29-2019
75% CONSTRUCTION DOCUMENTS

REVISIONS

KEY PLAN

SHEET
STAIR TOWER SECTIONS

S-420

DESIGN: Designer
DRAWN: Author
REVIEW: Checker

CN PROJECT NUMBER

4/1/2019 7:51:25 AM
C:\Revit Projects\UNC Wilmington Deck II_v17_roy.grantham.rvt

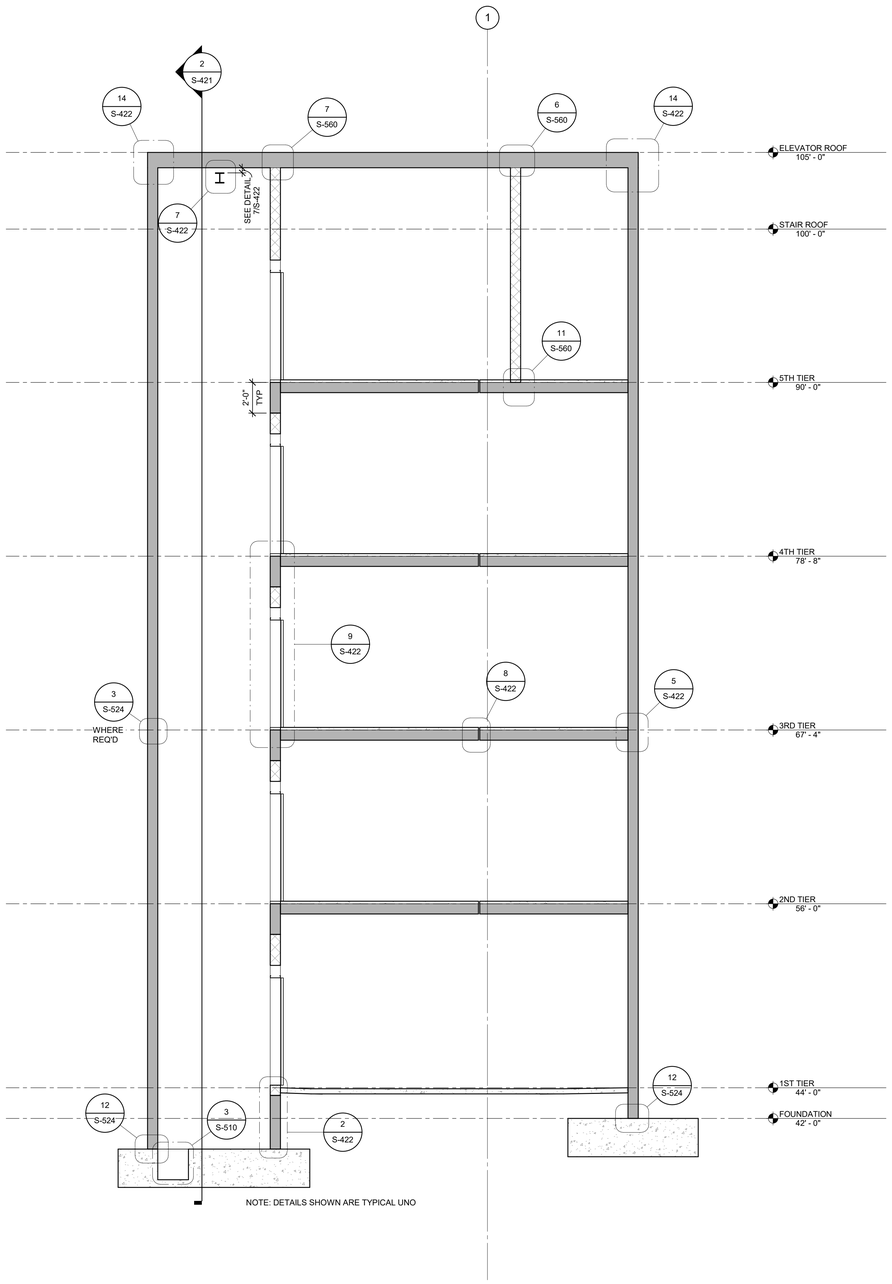

1 STAIR TOWER SECTION
1/4" = 1'-0"

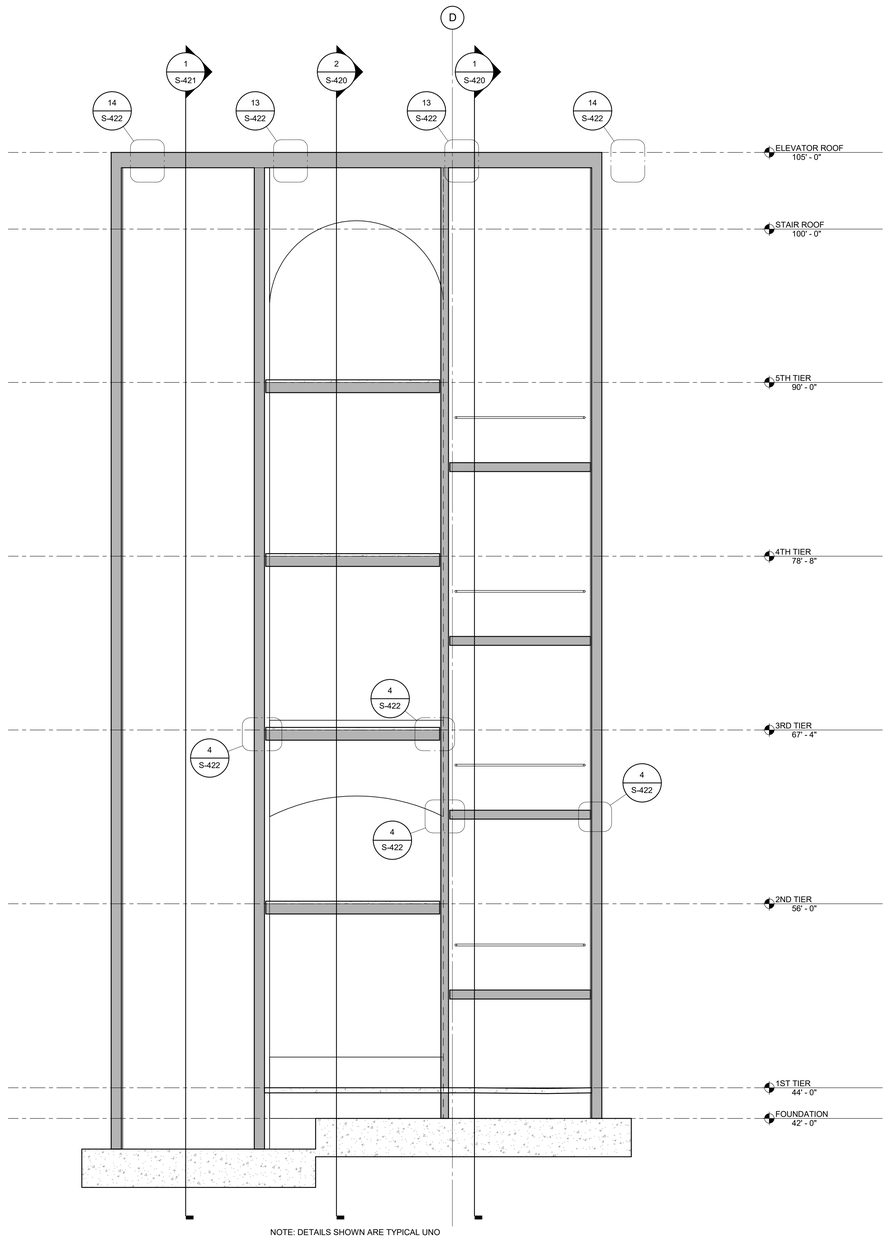

2 STAIR TOWER SECTION
1/4" = 1'-0"

UNIVERSITY of NORTH CAROLINA WILMINGTON
601 S COLLEGE ROAD
WILMINGTON, NORTH CAROLINA 28403

PARKING DECK II AND SURFACE PARKING (DESIGN-BUILD)
SOUTH CAMPUS - 4965 RIEGEL ROAD

SCO ID NUMBER: 18-19226-01A
CODE: 441828
ITEM: 301

CONTRACTOR
Balfour Beatty Construction

DESIGNER
CLARKNEXSEN
1523 ELIZABETH AVENUE, SUITE 300
CHARLOTTE, NORTH CAROLINA 28204
704.377.8800
CLARK NEXSEN LICENSE NUMBER: C-1028

WALKER CONSULTANTS
13860 Ballantyne Corporate Place
Suite 140
Charlotte, NC 28277
T: 704.247.6230
www.walkerconsultants.com
NC License No. F-0518

McKIM&CREED
CIVIL ENGINEER
243 NORTH FRONT STREET
WILMINGTON, NORTH CAROLINA
28401
910.343.1048

PROFESSIONAL SEAL
NOT FOR CONSTRUCTION
NORTH CAROLINA PROFESSIONAL ENGINEER SEAL 028007 JOEY D. ROWLAND

SUBMITTAL
03-29-2019
75% CONSTRUCTION DOCUMENTS

REVISIONS

KEY PLAN

SHEET
STAIR TOWER SECTIONS

S-421

DESIGN: Designer
DRAWN: Author
REVIEW: Checker

CN PROJECT NUMBER

4/1/2019 7:51:26 AM
C:\Revit Projects\UNC Wilmington Deck II_r17_ory.grantham.rvt

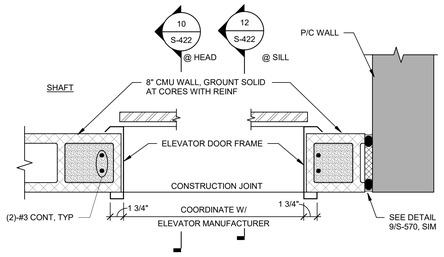

11 ELEVATOR JAMB DETAIL
1 1/2" = 1'-0"

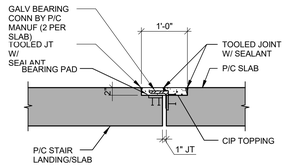

8 P/C STAIR/SLAB DETAIL
3/4" = 1'-0"

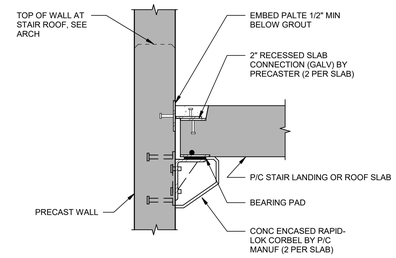

4 WALL/SLAB DETAIL
1" = 1'-0"

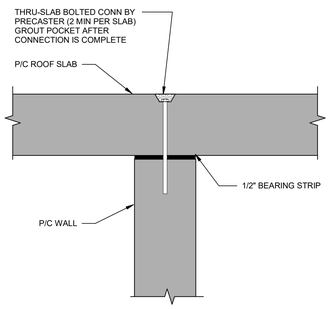

14 P/C SLAB/WALL DETAIL
1 1/2" = 1'-0"

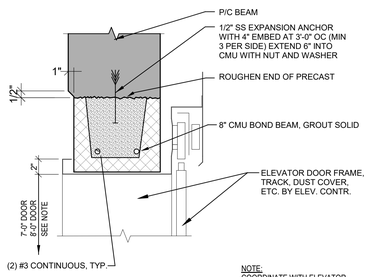

NOTE:
COORDINATE WITH ELEVATOR MANUFACTURER AND ARCHITECT FOR LOCATION

10 ELEVATOR HEAD DETAIL
1 1/2" = 1'-0"

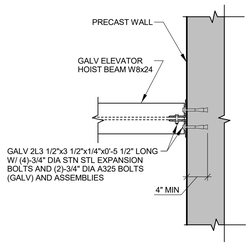

NOTES:
1. SET BEAM 4" BELOW ROOF SLAB.
2. P/C MANUF TO COODINATE HOIST BEAM BEARING CONDITION WITH ELEVATOR MANUF.

7 ELEVATOR HOIST BEAM DETAIL
1" = 1'-0"

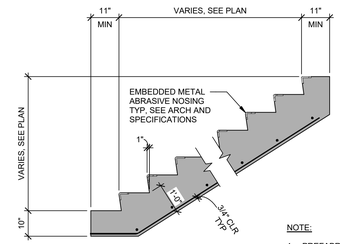

NOTE:
1. PREFABRICATED WWF ACCEPTABLE

PERFORMANCE DESIGN BY PRECASTER

3 TYPICAL STAIR SECTION
1/2" = 1'-0"

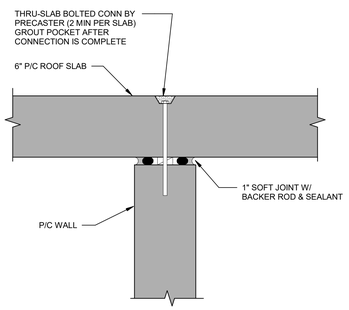

13 P/C SLAB/ROOF DETAIL
1 1/2" = 1'-0"

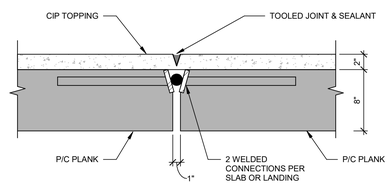

NOTE: ROUGHEN TOPPING BLOCKOUT FOR BOND

6 SLAB/SLAB DETAIL
1 1/2" = 1'-0"

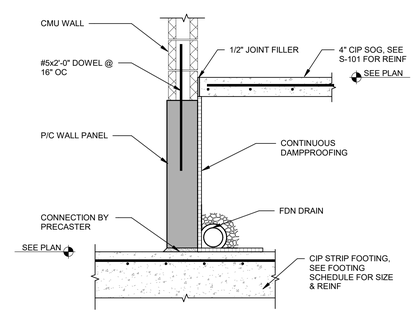

2 ELEVATOR FOUNDATION SECTION
3/4" = 1'-0"

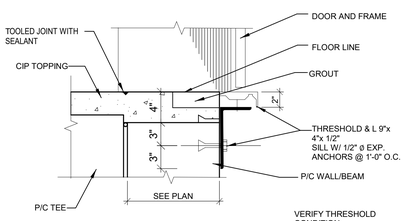

VERIFY THRESHOLD CONDITION W/ ELEV. CONTRACTOR

12 ELEVATOR SILL DETAIL
1 1/2" = 1'-0"

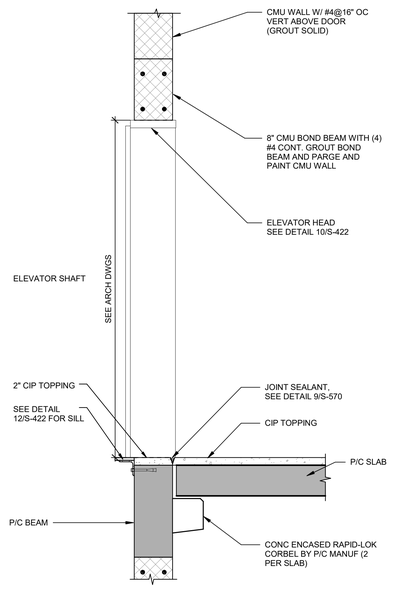

9 ELEVATOR DOOR SECTION
3/4" = 1'-0"

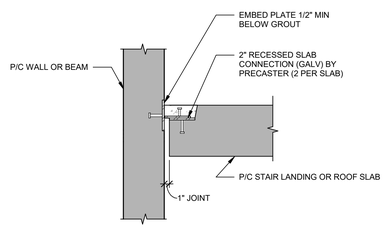

NOTES:
1. (2) CONNECTIONS PER SLAB

5 STAIR/BEAM DETAIL
1" = 1'-0"

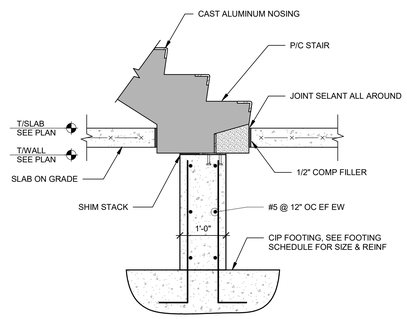

1 P/C STAIR/SLAB DETAIL
3/4" = 1'-0"

UNCW
UNIVERSITY of NORTH CAROLINA WILMINGTON
601 S COLLEGE ROAD
WILMINGTON, NORTH CAROLINA 28403

PARKING DECK II AND SURFACE PARKING (DESIGN-BUILD)
SOUTH CAMPUS - 4965 RIEGEL ROAD

SCO ID NUMBER: 18-19226-01A
CODE: 441828
ITEM: 301

CONTRACTOR
Balfour Beatty Construction

DESIGNER
CLARKNEXSEN
1523 ELIZABETH AVENUE, SUITE 300
CHARLOTTE, NORTH CAROLINA 28204
704.377.8800

CLARK NEXSEN LICENSE NUMBER: C-1028

WALKER CONSULTANTS
13860 Ballantyne Corporate Place
Suite 140
Charlotte, NC 28277
T: 704.247.6230
www.walkerconsultants.com
NC License No. F-0518

McKIM&CREED
CIVIL ENGINEER
243 NORTH FRONT STREET
WILMINGTON, NORTH CAROLINA
28401
910.343.1048

PROFESSIONAL SEAL
NOT FOR CONSTRUCTION
NORTH CAROLINA PROFESSIONAL SEAL 028007 ENGINEER JOEY D. ROWLAND

SUBMITTAL
03-29-2019
75% CONSTRUCTION DOCUMENTS

REVISIONS

KEY PLAN

SHEET
STAIR TOWER SECTIONS & DETAILS

S-422

DESIGN: Designer
DRAWN: Author
REVIEW: Checker

CN PROJECT NUMBER

4/17/2019 7:51:29 AM
C:\Revit Projects\UNC Wilmington Deck II_r17_rsy.grantham.rvt

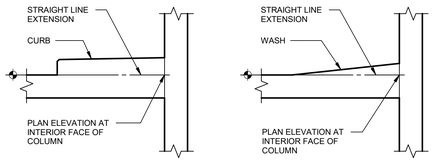

NOTE:
1. DETAILS APPLY TO SLAB-ON-GRADE AND SUPPORTED SLABS, UNLESS OTHERWISE NOTED.

12 ARCHITECTURAL / STRUCTURAL PLAN ELEVATION KEY (P/T)

3/4" = 1'-0"

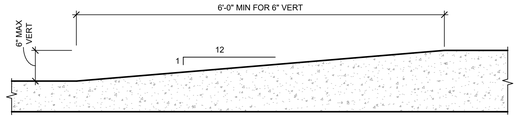

REFERENCED REGULATIONS AND STANDARDS

1. CHANGES IN LEVEL LESS THAN 1/2" AND 6".
   A. REFER TO REFERENCED STANDARDS FOR ADDITIONAL REQUIREMENTS.
   B. MAXIMUM SLOPE ON RAMP SURFACE IS 8.33%.
2. ADA-ACCESSIBILITY GUIDELINES RAMP SECTION 405 AND CURB RAMPS SECTION 406.
3. ASTM F1637-02 STANDARD PRACTICE FOR SAFE WALKING SURFACES. CHANGES IN LEVEL GREATER THAN 1/2" IN SECTION 5.2.4.
4. REFER TO SPECIFICATIONS FOR ADDITIONAL REQUIREMENTS.

8 VERTICAL CHANGE IN LEVEL

NTS

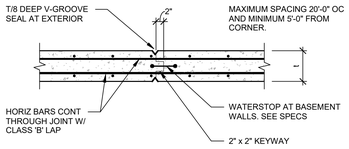

5 WALL CONSTRUCTION JOINT

NTS

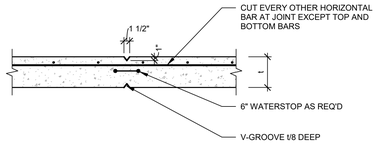

NOTE:
1. JOINT SPACING: 20'-0" MAXIMUM AND NO MORE THAN 10'-0" FROM CORNER.

4 VERTICAL WALL CONTROL JOINT

NTS

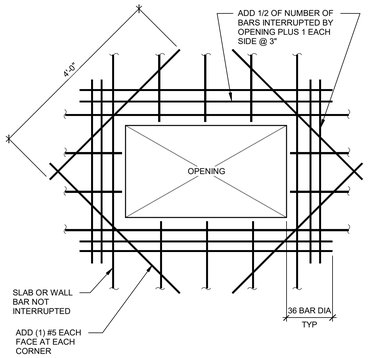

7 TYPICAL SLAB/WALL OPENING

NTS

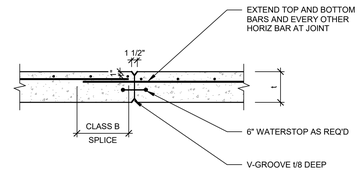

3 VERTICAL WALL CONSTRUCTION JOINT

NTS

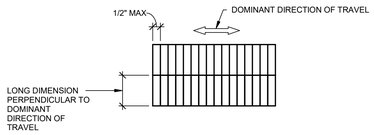

REFERENCED REGULATIONS AND STANDARDS

1. OPENINGS IN FLOOR OR GROUND SURFACES SHALL NOT ALLOW PASSAGE OF A SPHERE OF MORE THAN 1/2" DIA EXCEPT AS ALLOWED FOR ELEVATORS ADA 409.4.3. AND ADA 407.4.3. AND PLATFORM LIFTS ADA 410.4.
2. ADA-ACCESSIBILITY GUIDELINES FIGURE 303.2 ELONGATED OPENINGS IN FLOOR OR GROUND SURFACES.
3. ASTM F1637-02 STANDARD PRACTICE FOR SAFE WALKING SURFACES IN SECTION 10.
4. REFER TO SPECIFICATIONS FOR ADDITIONAL REQUIREMENTS.

11 OPENINGS IN FLOOR SURFACES

NTS

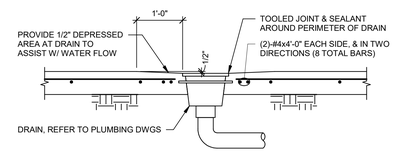

14 STAIR ON GRADE DETAIL

3/4" = 1'-0"

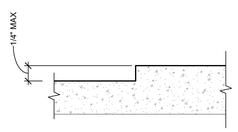

REFERENCED REGULATIONS AND STANDARDS

1. CHANGES IN LEVEL LESS THAN 1/4".
2. ADA-ACCESSIBILITY GUIDELINES FIGURE 303.2 CHANGE IN LEVEL FIG. 1
3. ASTM F1637-02 STANDARD PRACTICE FOR SAFE WALKING SURFACES IN SECTION 5.2.2.
4. REFER TO SPECIFICATIONS FOR ADDITIONAL REQUIREMENTS.

10 VERTICAL CHANGE IN LEVEL

NTS

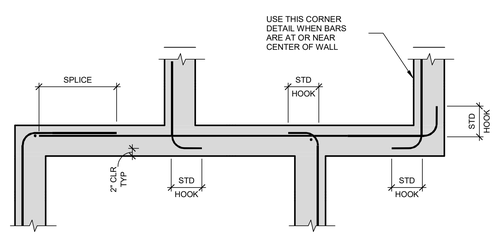

SINGLE LAYER BARS - ONE FACE OR CENTER LAYER
PLAN VIEW

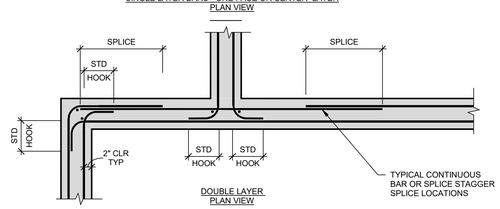

DOUBLE LAYER
PLAN VIEW

6 CORNER REINFORCEMENT

3/4" = 1'-0"

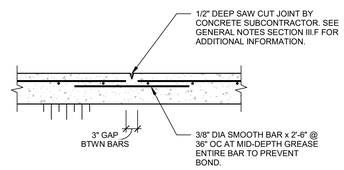

2 SLAB CONTROL JOINT

NTS

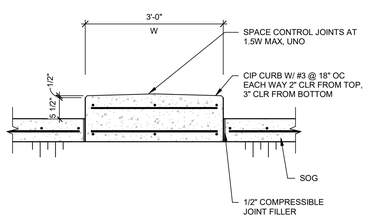

13 CURB DETAIL

3/4" = 1'-0"

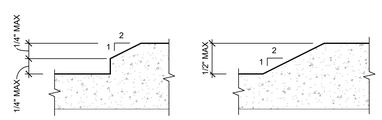

REFERENCED REGULATIONS AND STANDARDS

1. CHANGES IN LEVEL BETWEEN 1/4" AND 1/2".
2. ADA-ACCESSIBILITY GUIDELINES FIGURE 303.2 BEVELED CHANGE IN LEVEL.
3. ASTM F1637-02 STANDARD PRACTICE FOR SAFE WALKING SURFACES IN SECTION 5.2.3.
4. REFER TO SPECIFICATIONS FOR ADDITIONAL REQUIREMENTS.

9 VERTICAL CHANGE IN LEVEL

NTS

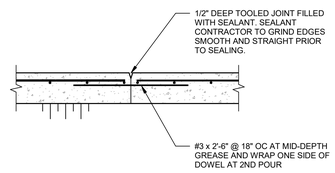

1 SLAB CONSTRUCTION JOINT

NTS

UNCW
UNIVERSITY of NORTH CAROLINA WILMINGTON
601 S COLLEGE ROAD
WILMINGTON, NORTH CAROLINA 28403

PARKING DECK II AND SURFACE PARKING (DESIGN-BUILD)
SOUTH CAMPUS - 4965 RIEGEL ROAD

SCO ID NUMBER: 18-19226-01A
CODE: 441828
ITEM: 301

CONTRACTOR
Balfour Beatty Construction

DESIGNER
CLARKNEXSEN
1523 ELIZABETH AVENUE, SUITE 300
CHARLOTTE, NORTH CAROLINA 28204
704.377.8800
CLARK NEXSEN LICENSE NUMBER: C-1028

WALKER CONSULTANTS
13860 Ballantyne Corporate Place
Suite 140
Charlotte, NC 28277
T: 704.247.6230
www.walkerconsultants.com
NC License No. F-0518

McKIM&CREED
CIVIL ENGINEER
243 NORTH FRONT STREET
WILMINGTON, NORTH CAROLINA
28401
910.343.1048

PROFESSIONAL SEAL

NORTH CAROLINA PROFESSIONAL SEAL 028007 ENGINEER JOEY D. ROWLAND
NOT FOR CONSTRUCTION

SUBMITTAL
03-29-2019
75% CONSTRUCTION DOCUMENTS

REVISIONS

KEY PLAN

SHEET
TYPICAL DETAILS

S-501

DESIGN: Designer
DRAWN: Author
REVIEW: Checker

CN PROJECT NUMBER

4/11/2019 7:51:31 AM
C:\Revit Projects\UNC Wilmington Deck II_r17_rey.grantham.rvt

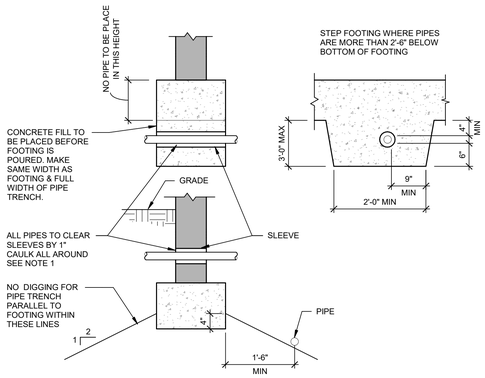

NOTE:
1. INCREASE CLEARANCE IF REQUIRED PER SETTLEMENT REQUIREMENTS.

4 PIPE @ WALL & FOOTING DETAIL

3/4" = 1'-0"

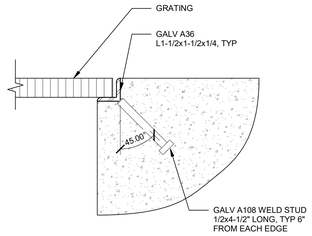

7 SUMP PIT ANGLE SUPPORT SECTION

3" = 1'-0"

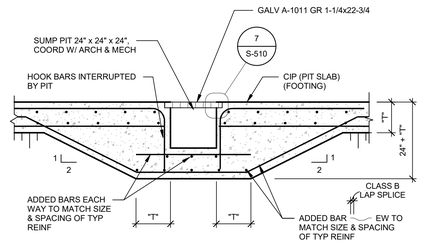

3 SUMP PIT DETAIL

3/4" = 1'-0"

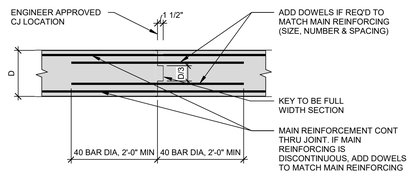

6 CONSTRUCTION JOINT AT STRIP FOOTING

3/4" = 1'-0"

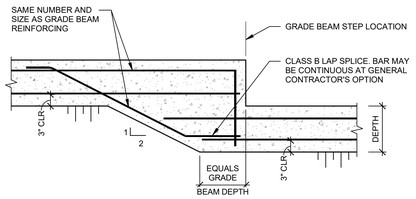

NOTES:
1. GRADE BEAM SHALL STEP A MAXIMUM OF 2'-0" VERTICAL IN 4'-0" HORIZONTAL
2. SEE GRADE BEAM SCHEDULE ON S-601 FOR DEPTH DIMENSION.
3. SEE PLAN FOR GRADE BEAM STEP LOCATIONS.

2 STEP FOOTING DETAIL

3/4" = 1'-0"

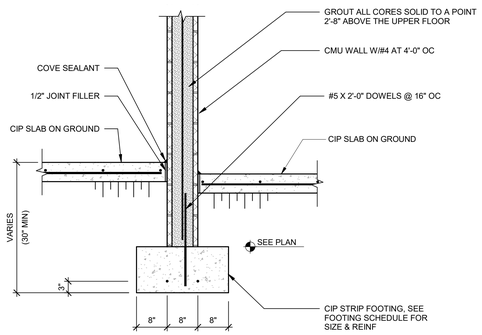

5 MASONRY WALL DETAIL

3/4" = 1'-0"

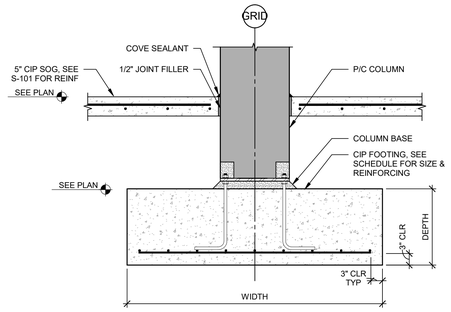

NOTE:
1. PRECAST COLUMN TO FOOTING SHOWN.

1 COLUMN/FOOTING DETAIL

3/4" = 1'-0"

UNCW
UNIVERSITY of NORTH CAROLINA WILMINGTON
601 S COLLEGE ROAD
WILMINGTON, NORTH CAROLINA 28403

PARKING DECK II AND SURFACE PARKING (DESIGN-BUILD)
SOUTH CAMPUS - 4965 RIEGEL ROAD

SCO ID NUMBER: 18-19226-01A
CODE: 441828
ITEM: 301

CONTRACTOR
Balfour Beatty Construction

DESIGNER
CLARKNEXSEN
1523 ELIZABETH AVENUE, SUITE 300
CHARLOTTE, NORTH CAROLINA 28204
704.377.8800
CLARK NEXSEN LICENSE NUMBER: C-1028

WALKER CONSULTANTS
13860 Ballantyne Corporate Place
Suite 140
Charlotte, NC 28277
T: 704.247.6230
www.walkerconsultants.com
NC License No. F-0518

McKIM&CREED
CIVIL ENGINEER
243 NORTH FRONT STREET
WILMINGTON, NORTH CAROLINA
28401
910.343.1048

PROFESSIONAL SEAL

NOT FOR CONSTRUCTION
NORTH CAROLINA PROFESSIONAL SEAL 028007 ENGINEER JOEY D. ROWLAND

SUBMITTAL
03-29-2019
75% CONSTRUCTION DOCUMENTS

REVISIONS

KEY PLAN

SHEET
FOUNDATION DETAILS

S-510

DESIGN: Designer
DRAWN: Author
REVIEW: Checker

CN PROJECT NUMBER

4/1/2019 7:51:33 AM
C:\Revit Projects\UNC Wilmington Deck II_r17_ory.grantham.rvt

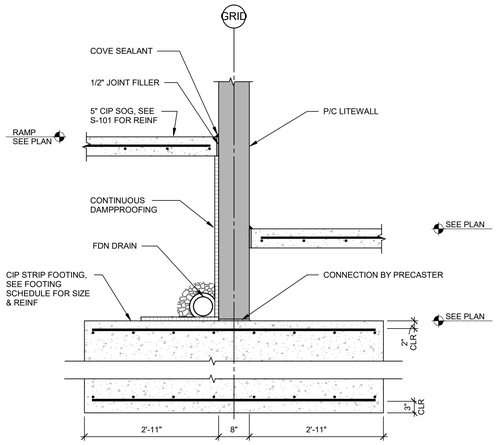

9 FOUNDATION SECTION
3/4" = 1'-0"

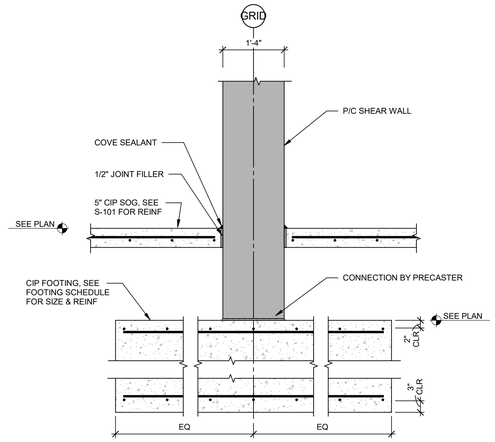

6 FOUNDATION SECTION
3/4" = 1'-0"

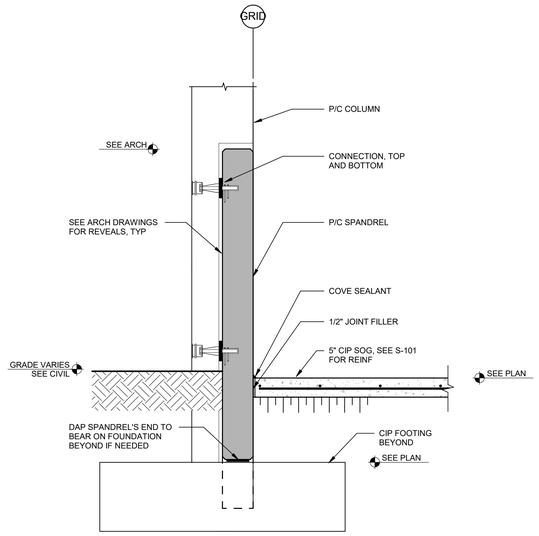

3 GRADE SPANDREL DETAIL
3/4" = 1'-0"

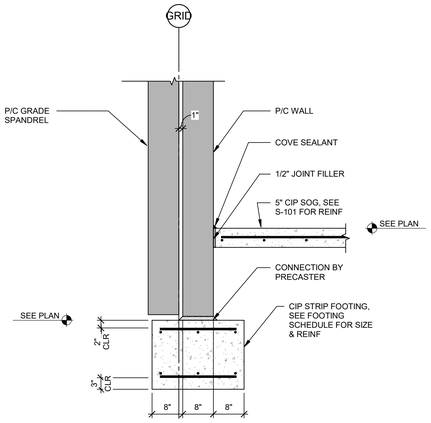

8 FOUNDATION SECTION
3/4" = 1'-0"

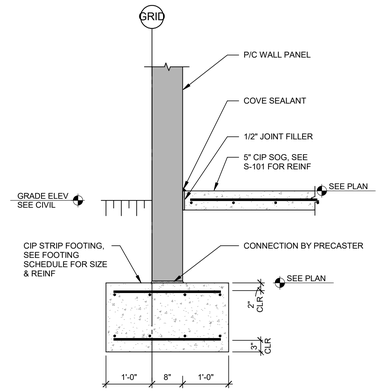

5 FOUNDATION SECTION
3/4" = 1'-0"

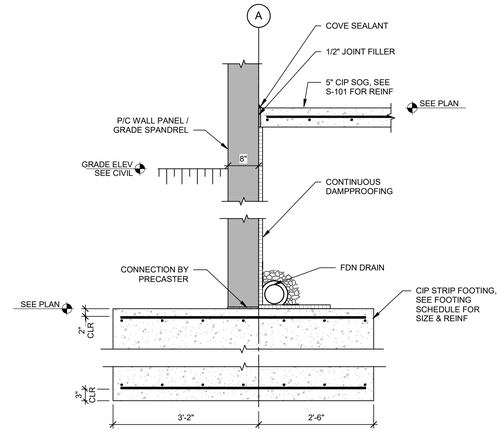

2 FOUNDATION SECTION
3/4" = 1'-0"

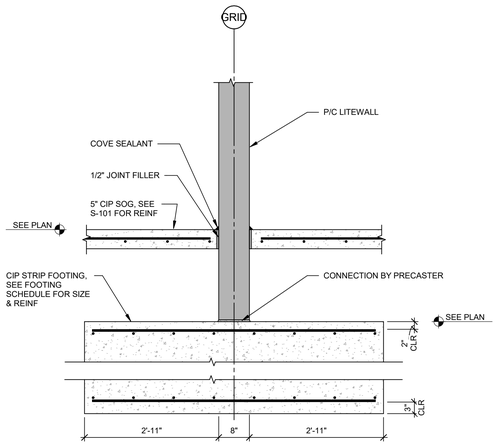

7 FOUNDATION SECTION
3/4" = 1'-0"

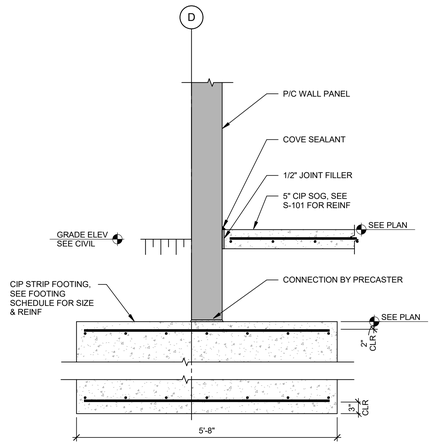

4 FOUNDATION SECTION
3/4" = 1'-0"

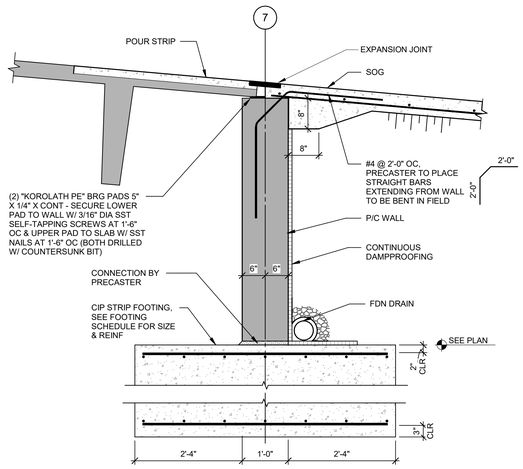

1 TRANSITION WALL FOUNDATION SECTION
3/4" = 1'-0"

UNCW
UNIVERSITY of NORTH CAROLINA WILMINGTON
601 S COLLEGE ROAD
WILMINGTON, NORTH CAROLINA 28403

PARKING DECK II AND SURFACE PARKING (DESIGN-BUILD)
SOUTH CAMPUS - 4965 RIEGEL ROAD

SCO ID NUMBER: 18-19226-01A
CODE: 441828
ITEM: 301

CONTRACTOR
Balfour Beatty Construction

DESIGNER
CLARKNEXSEN
1523 ELIZABETH AVENUE, SUITE 300
CHARLOTTE, NORTH CAROLINA 28204
704·377·8800
CLARK NEXSEN LICENSE NUMBER: C-1028

WALKER CONSULTANTS
13860 Ballantyne Corporate Place
Suite 140
Charlotte, NC 28277
T: 704.247.6230
www.walkerconsultants.com
NC License No. F-0518

McKIM&CREED
CIVIL ENGINEER
243 NORTH FRONT STREET
WILMINGTON, NORTH CAROLINA
28401
910.343.1048

PROFESSIONAL SEAL
NOT FOR CONSTRUCTION
NORTH CAROLINA PROFESSIONAL SEAL 028007 ENGINEER JOEY D. ROWLAND

SUBMITTAL
03-29-2019
75% CONSTRUCTION DOCUMENTS

REVISIONS

KEY PLAN

SHEET
FOUNDATION DETAILS

S-511

DESIGN: Designer
DRAWN: Author
REVIEW: Checker

CN PROJECT NUMBER

4/1/2019 7:51:35 AM
C:\Revit Projects\UNC Wilmington Deck II_r17_ry.grantham.rvt

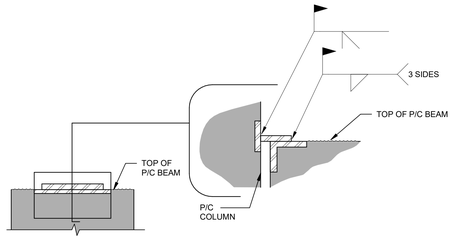

8 CONNECTION DETAIL PERFORMANCE DESIGN

NTS

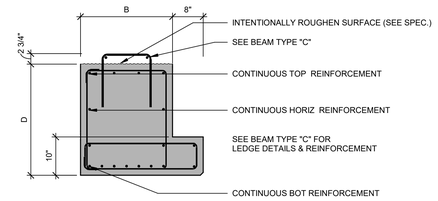

NOTE:
EQUIVALENT PREFABRICATED WWF ACCEPTABLE

4 BEAM TYPE "D"

NTS

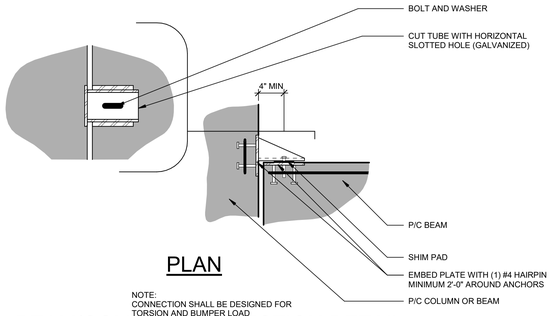

PLAN

NOTE:
CONNECTION SHALL BE DESIGNED FOR
TORSION AND BUMPER LOAD.

7 BEAM/COLUMN CONNECTION DETAIL PERFORMANCE DESIGN

NTS

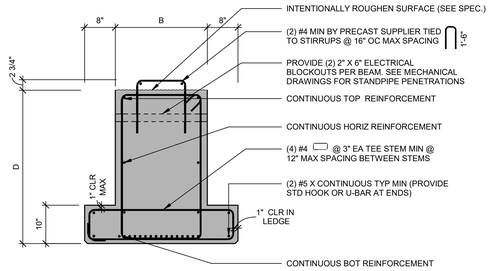

NOTE:
EQUIVALENT PREFABRICATED WWF ACCEPTABLE

3 BEAM TYPE "C"

NTS

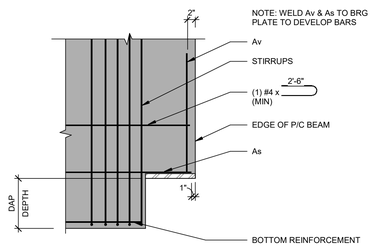

NOTES:
1. SEE PRECAST EMBED SCHEDULE FOR MATERIALS.
2. EQUIVALENT PREFABRICATED WWF ACCEPTABLE.

6 END OF BEAM REINFORCEMENT DETAIL

NTS

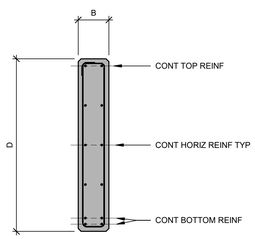

NOTE:
EQUIVALENT PREFABRICATED WWF ACCEPTABLE

2 BEAM TYPE "B"

NTS

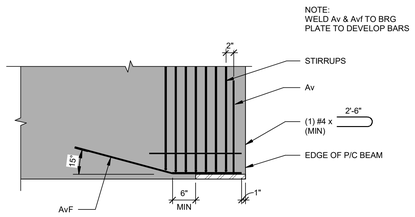

NOTES:
1. SEE PRECAST EMBED SCHEDULE FOR MATERIALS.
2. EQUIVALENT PREFABRICATED WWF ACCEPTABLE.

5 END OF BEAM REINFORCEMENT (UNDAPPED TEE) DETAIL

NTS

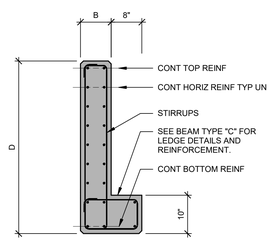

NOTE:
EQUIVALENT PREFABRICATED WWF ACCEPTABLE

1 BEAM TYPE "A"

NTS

SHEET NOTES

PRECAST BEAM NOTES:

1. FOR GENERAL NOTES, SEE SHEET S-001.
2. BEAM DESIGN IS PERFORMANCE DESIGN AND SHALL INCLUDE TYPE, NUMBER, AND LOCATION OF STRANDS AND/OR CONVENTIONAL REINFORCEMENT AS WELL AS LEDGE, SHEAR/TORSION AND END OF BEAM REINFORCEMENT. DESIGN SHALL ALSO INCLUDE ALL BEAM TO COLUMN (OR OTHER SUPPORT) CONNECTIONS. SEE SPECIFICATION SECTION 034100 FOR PRECAST CONCRETE.
3. APPLY MASTIC TO EACH STRAND AT ENDS OF BEAM.
4. FOR MEMBER SIZES AND OTHER INFORMATION, SEE STRUCTURAL AND ARCHITECTURAL DETAILS.
5. SEE MECHANICAL AND ELECTRICAL DRAWINGS FOR ANY REQUIRED PENETRATIONS.
6. POCKETED BEAMS SHALL BE PRESTRESSED TO A MINIMUM P/A OF 150 psi.
7. FOR EMBEDDED PLATES TO RECEIVE WELDS AS PART OF WELDED CONNECTIONS, SEE 7/S-524 .
8. FOR SEALANT REQUIREMENTS AT SPANDREL PANEL/BEAM/COLUMN INTERFACES, REFER TO DETAILS ON SHEET S-570.
9. PROVIDE OPENINGS AT APPROXIMATELY MID-DEPTH OF STEMS OF INVERTED TEE (DOUBLE LEDGER) BEAMS. PLACE NO CLOSER THAN 9'-0" FROM END OF BEAM. COORDINATE SIZE AND LOCATION REQUIREMENTS WITH MECHANICAL AND ELECTRICAL.

PRECAST EMBEDMENT SCHEDULE

PROD.	CONNECTION HARDWARE		EXCEPTIONS
TEE	BEARING PLATE	HDG	
	EMBED AT TOP CONNECTION	HDG	
	FLANGE WELDER EMBED	SS	
	EMBED AT EXPANSION JOINT	HDG	
BEAM	BEARING PLATE	HDG	
	EMBED TO TOP CONNECTION	HDG	
INT. SPA.	BEARING PLATE	HDG	
	EMBED AT CONNECTION w/COL.	HDG	
	EMBED AT CONNECTION w/WALL	HDG	
	EMBED AT CONNECTION w/TEE	HDG	
EXT. SPA.	BEARING PLATE	HDG	
	EMBED AT CONNECTION w/COL.	HDG	
	EMBED AT CONNECTION w/WALL	HDG	
	EMBED AT CONNECTION w/TEE	HDG	
COL.	BASE PLATE	PS	
	TOP PLATE/HAUNCH	HDG	
	HAUNCH ASSEMBLY	HDG	
	EMBED AT CONNECTION w/TEE	HDG	
	EMBED AT CONNECTION w/EXT. SPA.	HDG	
	EMBED AT CONNECTION w/INT. SPA.	HDG	
	EMBED AT CONNECTION w/WALL	HDG	
	EMBED AT CONNECTION w/BM.	HDG	
STRUC. WALL	EMBED AT CONNECTION w/TEE	HDG	
	EMBED AT CONNECTION w/BEAM	HDG	
	EMBED AT CONNECTION w/WALL	HDG	
	EMBED AT CONNECTION w/COL.	HDG	
	EMBED AT CONNECTION w/FOUNDATION	HDG	
ARCH. WALL	EMBED AT CONNECTION w/TEE	HDG	
	EMBED AT CONNECTION w/BEAM	HDG	
	EMBED AT CONNECTION w/WALL	HDG	
	EMBED AT CONNECTION w/COL.	HDG	
	EMBED AT CONNECTION w/FOUNDATION	HDG	
FLAT SLABS	EMBED AT CONNECTION w/BEAM	HDG	
(RISER)	EMBED AT CONNECTION w/COL.	HDG	
	EMBED AT CONNECTION w/SLAB	HDG	
	BEARING PLATES	HDG	
LOOSE MTL.	TEE TO TEE WELDER	SS	
	TEE TO BEAM	HDG	
	TEE TO SPANDREL	HDG	
	TEE TO COLUMN	HDG	
	TEE TO WALL	HDG	
	BEAM TOP	HDG	
	BEAM BOTTOM (CUBE)	HDG	
	SPANDREL TOP	HDG	
	SPANDREL BOTTOM	HDG	
	ANCHOR BOLTS	PS	
	OTHER FOUNDATION EMBEDS	HDG	
SPL. INFO.			
ABBREVIATIONS :	PS. = PLAIN STEEL	SS = STAINLESS STEEL	
	HDG. = HOT DIP GALVANIZED	ZRC. = ZINC RICH COATING	

PRECAST BEAM SCHEDULE

MARK	WIDTH (W)	DEPTH (D)	REMARKS
	8"		
24IT36	2' - 0"	3' - 0"	

UNCW
UNIVERSITY of NORTH CAROLINA WILMINGTON
601 S COLLEGE ROAD
WILMINGTON, NORTH CAROLINA 28403

PARKING DECK II AND SURFACE
PARKING (DESIGN-BUILD)
SOUTH CAMPUS - 4965 RIEGEL ROAD

SCO ID NUMBER: 18-19226-01A
CODE: 441828
ITEM: 301

CONTRACTOR
Balfour Beatty Construction

DESIGNER
CLARKNEXSEN
1523 ELIZABETH AVENUE, SUITE 300
CHARLOTTE, NORTH CAROLINA 28204
704.377.8800
CLARK NEXSEN LICENSE NUMBER: C-1028

WALKER CONSULTANTS
13860 Ballantyne Corporate Place
Suite 140
Charlotte, NC 28277
T: 704.247.6230
www.walkerconsultants.com
NC License No. F-0518

McKIM&CREED
CIVIL ENGINEER
243 NORTH FRONT STREET
WILMINGTON, NORTH CAROLINA
28401
910.343.1048

PROFESSIONAL SEAL

NORTH CAROLINA PROFESSIONAL SEAL 028007 ENGINEER JOEY D. ROWLAND
NOT FOR CONSTRUCTION

SUBMITTAL
03-29-2019
75% CONSTRUCTION DOCUMENTS

REVISIONS

KEY PLAN

SHEET
P/C BEAM DETAILS

S-520

DESIGN: Designer
DRAWN: Author
REVIEW: Checker

CN PROJECT NUMBER

4/1/2019 7:51:39 AM
C:\Revit Projects\UNC Wilmington Deck II_r17_rsy.grantham.rvt

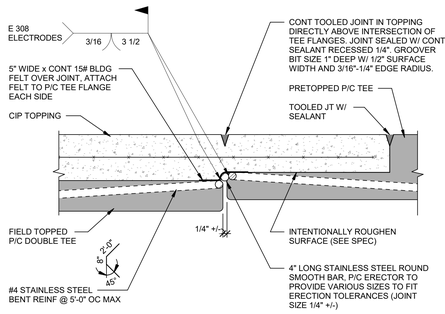

NOTES:
1. RECOMMEND USING GMAW PROCEDURE TO REDUCE SLAG.
2. TO ALLEVIATE CRACKING, CONSIDER USING SMALLER WELD PASSES.
3. OBSERVATION AND VERIFICATION OF WELDING PROCEDURES BY A TESTING AGENCY IS RECOMMENDED. PARTICULARLY FOR INITIAL INSTALLATION OF TEE-TO-TEE CONNECTIONS.

9 TEE/TEE JOINT DETAIL FIELD TOPPED TEES & PRETOPPED TEES

NTS

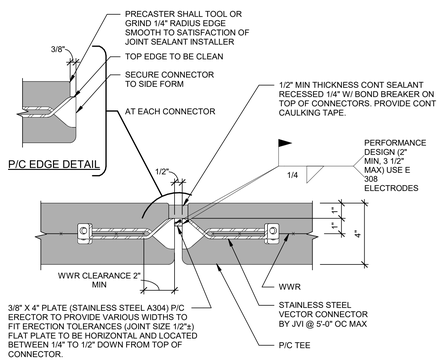

NOTES:
1. CENTER WELD FIELD PLATE ALONG FACEPLATE OF CONNECTOR. DO NOT WELD AT CORNERS.
2. CAUTION: DO NOT OVER WELD; 3 1/2" MAXIMUM WELD LENGTH. TOO MUCH WELDING HEAT WILL CRACK THE TEE FLANGES. PRECAST ERECTOR SHALL BE RESPONSIBLE FOR COST OF REPAIRING AND RESEALING CRACKED CONCRETE AROUND WELDS FOR A PERIOD OF TWO YEARS AFTER FINAL COMPLETION OF STRUCTURE.
3. RECOMMEND USING GMAW PROCEDURES TO REDUCE SLAG.
4. TO ALLEVIATE CRACKING, CONSIDER USING SMALLER WELD PASSES.
5. OBSERVATION AND VERIFICATION OF WELDING PROCEDURES BY A TESTING AGENCY OR MANUFACTURER IS RECOMMENDED, PARTICULARLY FOR INITIAL INSTALLATION OF TEE-TO-TEE CONNECTIONS.

8 TEE/TEE JOINT DETAIL AT PRETOPPED TEES

NTS

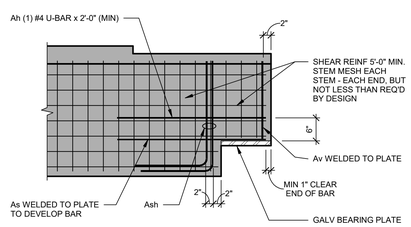

NOTES:
1. EQUIVALENT PREFABRICATED WWF ACCEPTABLE
2. SEE PRECAST EMBED SCHEDULE FOR MATERIALS

7 END OF TEE REINFORCEMENT (DAPPED TEE) DETAIL

NTS

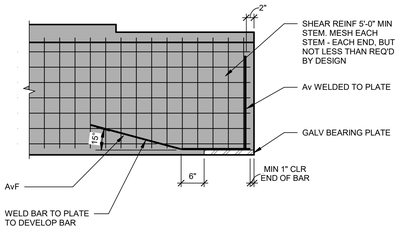

NOTES:
1. EQUIVALENT PREFABRICATED WWF ACCEPTABLE
2. SEE PRECAST EMBED SCHEDULE FOR MATERIALS

6 END OF TEE REINFORCEMENT (UNDAPPED TEE) DETAIL

NTS

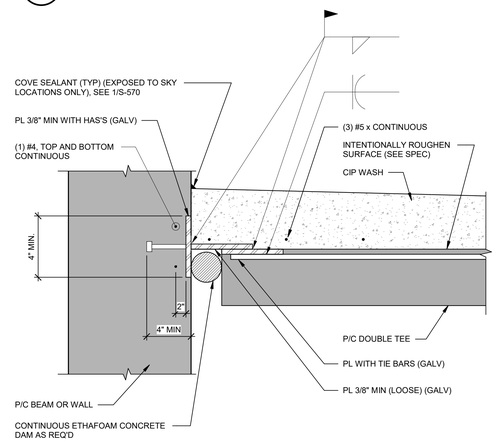

NOTES:
1. PROVIDE CONNECTION AT 4'-0" OC AT SPANDRELS, DECREASE SPACING AT SHEAR WALLS AS REQUIRED FOR LATERAL LOADS.
2. PRECASTER CAN PROPOSE ALTERNATE DETAIL FOR ENGINEER REVIEW.
3. TOUCH UP WELDS WITH MINIMUM 2 COATS ZINC PRIMER.

5 TOPPING DETAIL

NTS

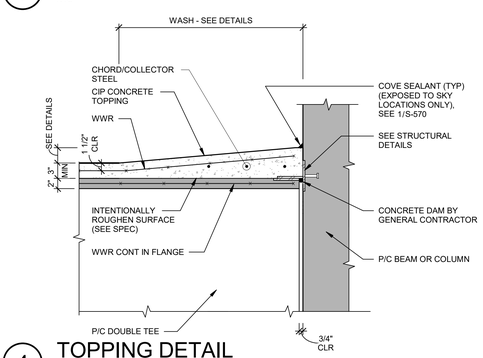

4 TOPPING DETAIL

NTS

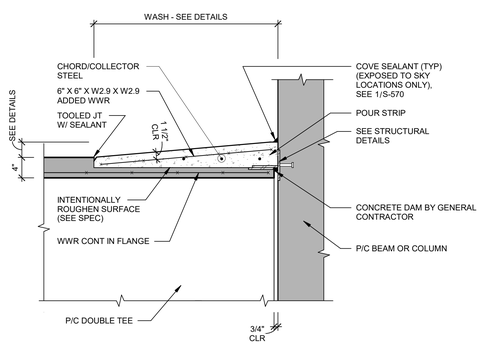

3 TYPICAL POUR STRIP DETAIL

NTS

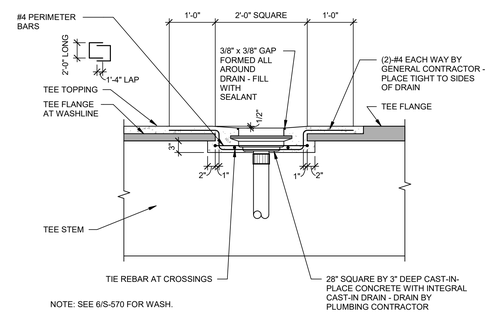

NOTE: SEE 6/S-570 FOR WASH.

2 DRAIN INSTALLATION DETAIL P/C CONSTRUCTION

NTS

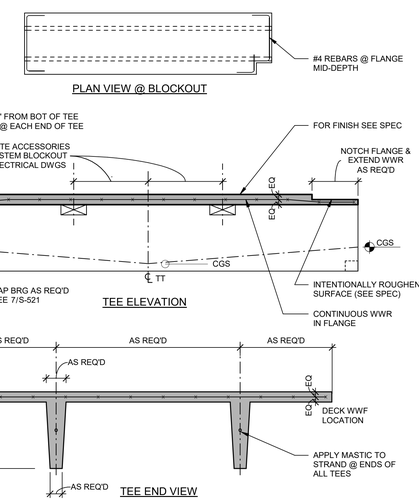

1 TYPICAL PRECAST TEE DETAIL (PRETOPPED TEES)

NTS

SHEET NOTES

PRECAST TEE NOTES:

1. FOR GENERAL NOTES, SEE SHEET S-001.
2. TEE DESIGN IS PERFORMANCE DESIGN AND SHALL INCLUDE TYPE, NUMBER AND LOCATION OF STRANDS AS WELL AS SHEAR, FLANGE, AND END OF TEE REINFORCEMENT. SEE SPECIFICATION SECTION 034100 FOR PRECAST CONCRETE. MINIMUM PRECAST TEE FLANGE AND TOPPING REINFORCEMENT SHALL BE AS FOLLOWS:
   A. PRETOPPED TEE FLANGE: WWF 12X4 - W4XW4
   B. TOPPED TEE FLANGE: WWF 12X6 - W2.9XW2.9
   C. 3" TOPPING: WWF 12X4 - W4XW4
   D. PLACE REINFORCEMENT AT MID DEPTH OF FLANGE OR TOPPING.
   E. LARGER QUANTITY OF REINFORCEMENT SHALL BE ORIENTED IN TRANSVERSE DIRECTION.
   F. PROVIDE TOPPING WWF IN SHEETS NOT ROLLS.
   G. SUPPORT TOPPING IN WWF WITH CONTINUOUS BAR SUPPORTS SPACED AT 2'-0" OC MAX
4. FOR TEE/TEE JOINT DETAILS, SEE 8/S-521
5. FOR EMBED PLATES TO RECEIVE WELDS AS PART OF WELDED CONNECTIONS, SEE 7/S-524.

UNCW
UNIVERSITY of NORTH CAROLINA WILMINGTON
601 S COLLEGE ROAD
WILMINGTON, NORTH CAROLINA 28403

PARKING DECK II AND SURFACE PARKING (DESIGN-BUILD)
SOUTH CAMPUS - 4965 RIEGEL ROAD

SCO ID NUMBER: 18-19226-01A
CODE: 441828
ITEM: 301

CONTRACTOR
Balfour Beatty Construction

DESIGNER

CLARKNEXSEN
1523 ELIZABETH AVENUE, SUITE 300
CHARLOTTE, NORTH CAROLINA 28204
704.377.8800
CLARK NEXSEN LICENSE NUMBER: C-1028

WALKER CONSULTANTS
13860 Ballantyne Corporate Place
Suite 140
Charlotte, NC 28277
T: 704.247.6230
www.walkerconsultants.com
NC License No. F-0518

McKIM&CREED
CIVIL ENGINEER
243 NORTH FRONT STREET
WILMINGTON, NORTH CAROLINA
28401
910.343.1048

PROFESSIONAL SEAL
NOT FOR CONSTRUCTION
NORTH CAROLINA PROFESSIONAL SEAL 028007 ENGINEER JOEY D. ROWLAND

SUBMITTAL
03-29-2019
75% CONSTRUCTION DOCUMENTS

REVISIONS

KEY PLAN

SHEET
P/C TEE DETAILS

S-521

DESIGN: Designer
DRAWN: Author
REVIEW: Checker

CN PROJECT NUMBER

4/11/2019 7:51:41 AM
C:\Revit Projects\UNC Wilmington Deck II_r17_roy.grantham.rvt

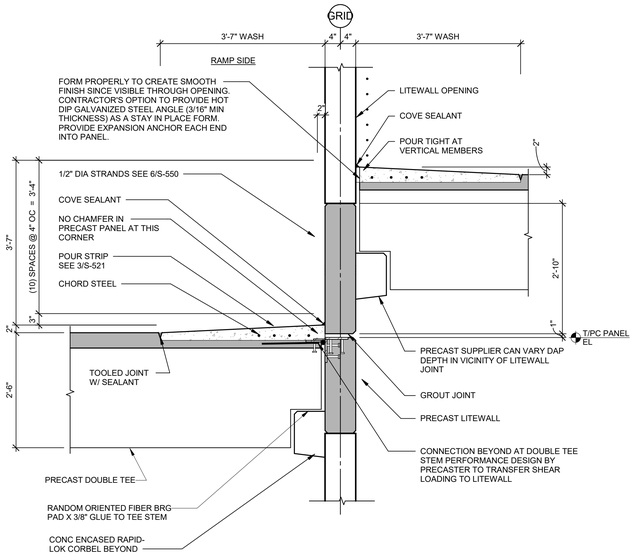

3 LIGHT WALL SECTION DETAIL

3/4" = 1'-0"

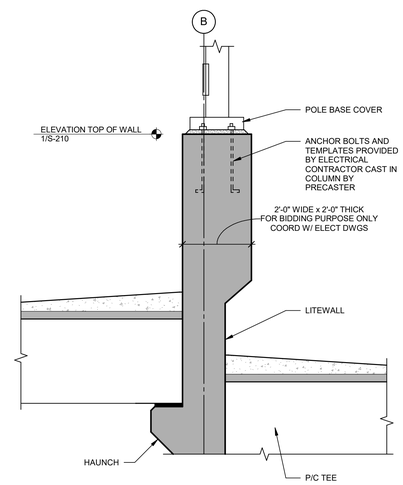

2 LITEWALL/POLE BASE CONNECTION DETAIL

3/4" = 1'-0"

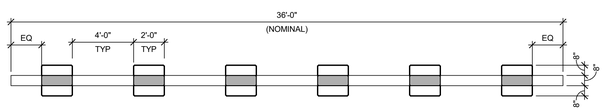

6 LITEWALL PLAN DETAIL

1/4" = 1'-0"

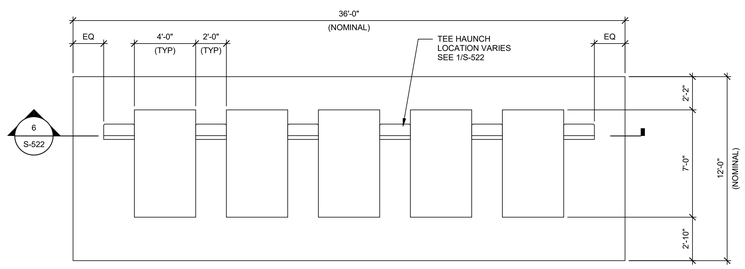

5 LITEWALL ELEVATION DETAIL

1/4" = 1'-0"

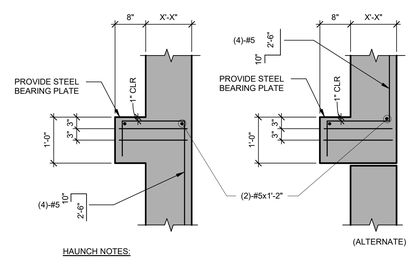

HAUNCH NOTES:

1. THE WIDTH OF HAUNCH IS 1'-6" UNLESS NOTED OTHERWISE.
2. LOCATE THE HAUNCH AND MODIFY THE TEE DAP AS REQUIRED TO AVOID THE HORIZONTAL JOINT LOCATION.

1 LITEWALL HAUNCH DETAIL

3/4" = 1'-0"

SHEET NOTES

PRECAST LITEWALL NOTES:

1. FOR GENERAL NOTES, SEE S-001.
2. LITEWALL DESIGN IS PERFORMANCE DESIGN AND SHALL INCLUDE SIZE, NUMBER AND LOCATION OF VERTICAL AND HORIZONTAL REINFORCING, INCLUDING TIES AND STIRRUPS. DESIGN SALL ALSO INCLUDE BASE CONNECTIONS, HAUNCH OR LEDGE REINFORCEMENT, AND SIZE, NUMBER, AND SPACING OF INSERTCOIL ROD (OR OTHER SHEAR TRANSFER) CONNECTIONS INTO POUR STRIPS FOR SHEAR TRANSFER OF LATERAL LOADS. SEE SPECIFICATION 03410 FOR PRECAST CONCRETE.
3. FOR LITEWALL SIZES, SEE DETAILS THIS SHEET.
4. FOR LITEWALL BASE CONNECTION, SEE 12/S-524.
5. FOR TOP OF LITEWALLS, SEE 1/S-210.
6. PROVIDE THICKENED SECTION AT TOP OF LITEWALL AS REQUIRED FOR LIGHT POLE SUPPORT. COORDINATE LOCATION AND REQUIREMENTS WITH ELECTRICAL DRAWINGS AND LIGHT POLE SUPPLIER.
7. FOR EMBEDED PLATES TO RECEIVE WELDS AS PART OF WELDED CONNECTIONS, SEE 7/S-524.
8. FOR LATERAL LOADS DUE TO SEISMIC, SEE 1/S-210.
9. PRECAST MANUFACTURER TO CONDUCT THIER OWN LATERAL ANAYLSIS FOR LITEWALL MEMBER AND CONNECTION DESIGN.

UNCW
UNIVERSITY of NORTH CAROLINA WILMINGTON
601 S COLLEGE ROAD
WILMINGTON, NORTH CAROLINA 28403

PARKING DECK II AND SURFACE PARKING (DESIGN-BUILD)
SOUTH CAMPUS - 4965 RIEGEL ROAD

SCO ID NUMBER: 18-19226-01A
CODE: 441828
ITEM: 301

CONTRACTOR
Balfour Beatty Construction

DESIGNER
CLARKNEXSEN
1523 ELIZABETH AVENUE, SUITE 300
CHARLOTTE, NORTH CAROLINA 28204
704.377.8800
CLARK NEXSEN LICENSE NUMBER: C-1028

WALKER CONSULTANTS
13860 Ballantyne Corporate Place
Suite 140
Charlotte, NC 28277
T: 704.247.6230
www.walkerconsultants.com
NC License No. F-0518

McKIM&CREED
CIVIL ENGINEER
243 NORTH FRONT STREET
WILMINGTON, NORTH CAROLINA
28401
910.343.1048

PROFESSIONAL SEAL

NORTH CAROLINA PROFESSIONAL SEAL 028007 ENGINEER JOEY D. ROWLAND
NOT FOR CONSTRUCTION

SUBMITTAL
03-29-2019
75% CONSTRUCTION DOCUMENTS

REVISIONS

KEY PLAN

SHEET
P/C LITEWALL DETAILS

S-522

DESIGN: Designer
DRAWN: Author
REVIEW: Checker

CN PROJECT NUMBER

4/1/2019 7:51:42 AM
C:\Revit Projects\UNC Wilmington Deck II_r17_roy.grantham.rvt

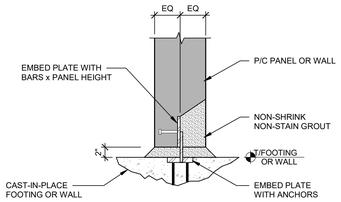

12 PRECAST WALL BASE DETAIL
NTS

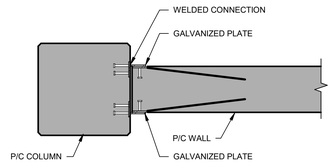

9 VERT COLUMN TO PANEL CONNECTION DETAIL
NTS

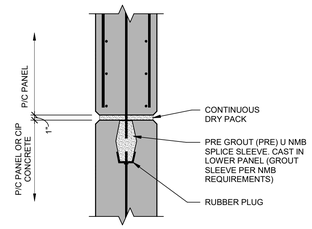

3 CONNECTION DETAIL
NTS

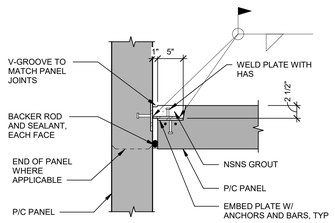

NOTES:
1. (2) CONNECTIONS MINIMUM PER PANEL
2. SEE PRECAST EMBEDMENT SCHEDULE FOR MATERIALS.

8 VERTICAL PANEL/PANEL CONNECTION
NTS

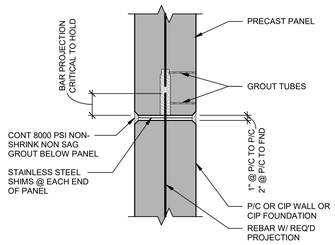

5 WALL TO WALL CONNECTION DETAIL
1" = 1'-0"

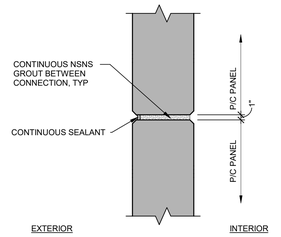

2 HORIZONTAL PANEL/PANEL DETAIL
NTS

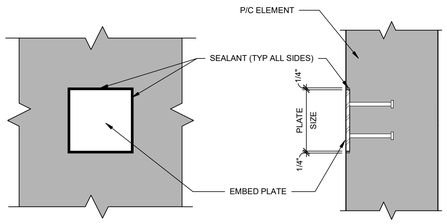

NOTE:
TAKE ALL FEASIBLE MEASURES TO CONTROL EXCESSIVE HEATING OF THE EMBEDDED PLATE(S) BY LIMITING WELD LENGTHS-SKIP WELDS WILL HELP. USE LAYERED SMALLER WELDS INSTEAD OF A SINGLE LARGE WELD.

7 EMBED PLATE DETAIL
NTS

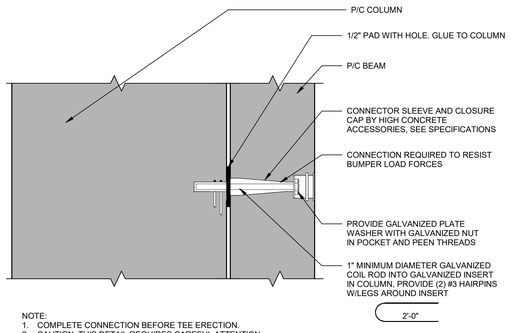

NOTE:
1. COMPLETE CONNECTION BEFORE TEE ERECTION.
2. CAUTION. THIS DETAIL REQUIRES CAREFUL ATTENTION TO ERECTION TOLERANCE. CONSIDER USING SLOTTED INSERT AS REQUIRED.

4 CONNECTION DETAIL
NTS

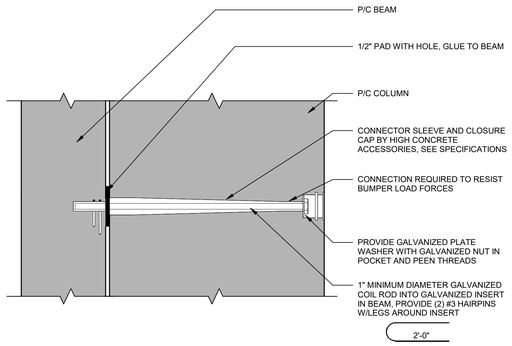

NOTE: COMPLETE CONNECTION BEFORE TEE ERECTION.

1 CONNECTION DETAIL
NTS

UNCW
UNIVERSITY of NORTH CAROLINA WILMINGTON
601 S COLLEGE ROAD
WILMINGTON, NORTH CAROLINA 28403

PARKING DECK II AND SURFACE PARKING (DESIGN-BUILD)
SOUTH CAMPUS - 4965 RIEGEL ROAD

SCO ID NUMBER: 18-19226-01A
CODE: 441828
ITEM: 301

CONTRACTOR
Balfour Beatty Construction

DESIGNER
CLARKNEXSEN
1523 ELIZABETH AVENUE, SUITE 300
CHARLOTTE, NORTH CAROLINA 28204
704.377.8800
CLARK NEXSEN LICENSE NUMBER: C-1028

WALKER CONSULTANTS
13860 Ballantyne Corporate Place
Suite 140
Charlotte, NC 28277
T: 704.247.6230
www.walkerconsultants.com
NC License No. F-0518

McKIM&CREED
CIVIL ENGINEER
243 NORTH FRONT STREET
WILMINGTON, NORTH CAROLINA
28401
910.343.1048

PROFESSIONAL SEAL
NORTH CAROLINA PROFESSIONAL SEAL 028007 ENGINEER JOEY D. ROWLAND
NOT FOR CONSTRUCTION

SUBMITTAL
03-29-2019
75% CONSTRUCTION DOCUMENTS

REVISIONS

KEY PLAN

SHEET
TYPICAL P/C CONNECTION DETAILS

S-524

DESIGN: Designer
DRAWN: Author
REVIEW: Checker

CN PROJECT NUMBER

4/1/2019 7:51:43 AM
C:\Revit Projects\UNC Wilmington Deck II_r17_roy grantham.rvt

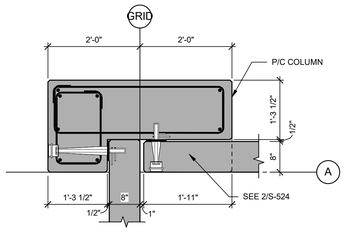

14 P/C CLOSURE SPANDREL PLAN DETAIL
3/4" = 1'-0"

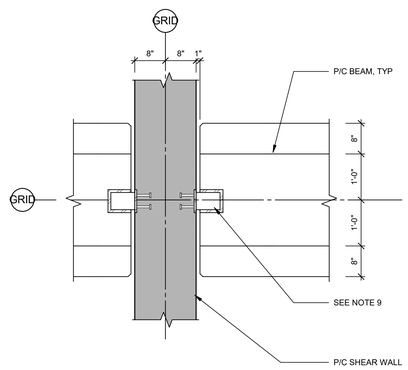

13 PRECAST WALL/BEAM PLAN DETAIL
3/4" = 1'-0"

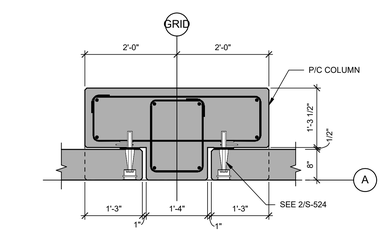

12 PLAN DETAIL
3/4" = 1'-0"

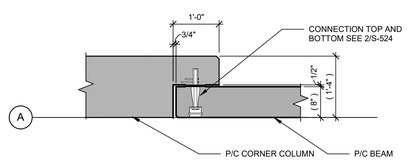

11 PRECAST COL/SPANDREL PLAN DETAIL
3/4" = 1'-0"

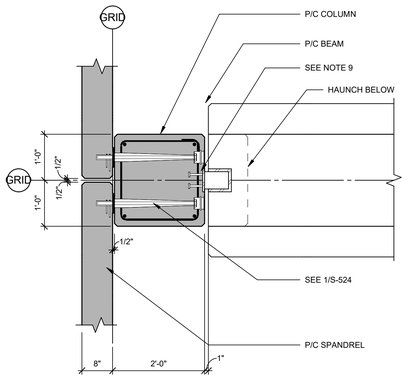

10 PRECAST COLUMN PLAN DETAIL
3/4" = 1'-0"

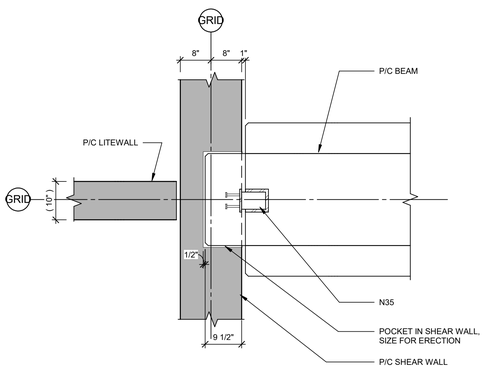

9 PRECAST WALL/BEAM PLAN DETAIL
3/4" = 1'-0"

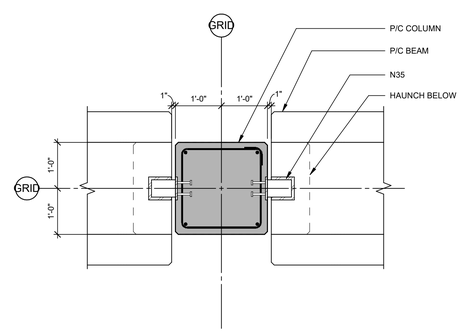

8 PRECAST COLUMN PLAN DETAIL
3/4" = 1'-0"

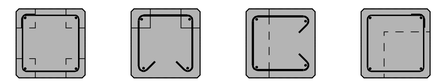

NOTE:
MAIN REINFORCING NOT SHOWN FOR CLARITY

7 DIAGRAM FOR ADDED TIES BETWEEN POCKETS
NTS

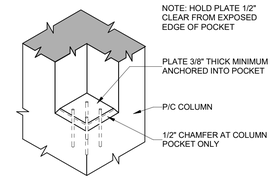

6 PRECAST COLUMN POCKET
NTS

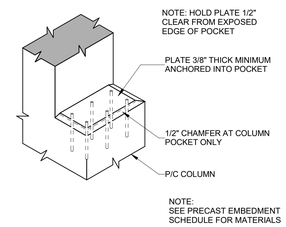

5 PRECAST COLUMN POCKET
NTS

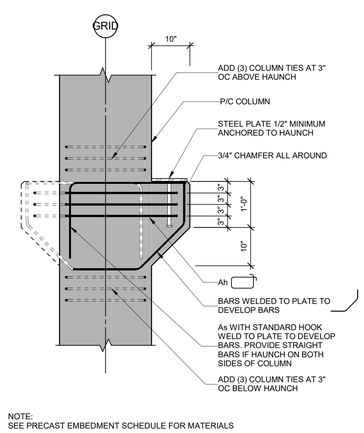

NOTE:
SEE PRECAST EMBEDMENT SCHEDULE FOR MATERIALS

4 PRECAST HAUNCH DETAIL
NTS

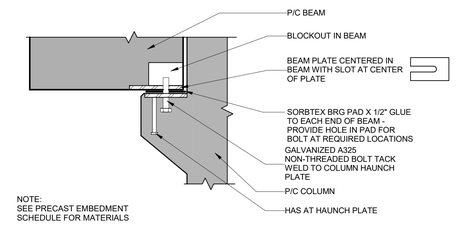

NOTE:
SEE PRECAST EMBEDMENT
SCHEDULE FOR MATERIALS

3 PRECAST CONNECTION DETAIL
NTS

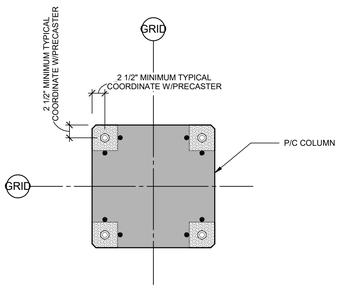

2 PRECAST COLUMN PLAN DETAIL
NTS

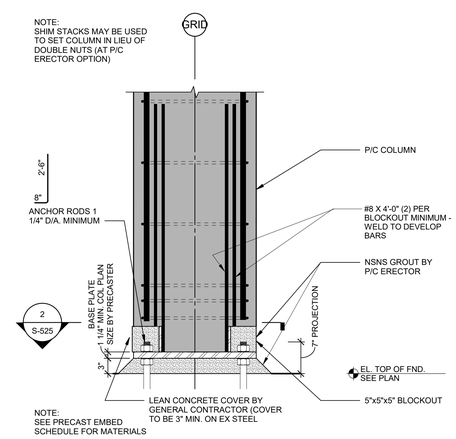

1 PRECAST COLUMN BASE DETAIL
NTS

SHEET NOTES

PRECAST COLUMN NOTES:

1. FOR GENERAL NOTES, SEE SHEET S-001.
2. COLUMN DESIGN IS PERFORMANCE DESIGN AND SHALL INCLUDE TYPE, NUMBER AND LOCATION OF VERTICAL REINFORCEMENT AND TIES. DESIGN SHALL ALSO INCLUDE BASE, POCKET, AND HAUNCH REINFORCEMENT. SEE SPECIFICATION SECTION 034100 FOR PRECAST CONCRETE.
3. PERFORMANCE DESIGN SHALL INCLUDE EFFECTS DUE TO VOLUME CHANGE OF THE STRUCTURE. COLUMNS SHALL BE DESIGNED ASSUMING PINNED BASE CONDITIONS.
4. FOR COLUMN SIZES, SEE PLANS AND DETAILS ON SHEET S-525.
5. FOR COLUMN BASE, POCKET, AND HAUNCH DETAILS, SEE DETAILS ON SHEET S-525.
6. PROVIDE #5 MIN VERTICAL AT EACH CORNER BETWEEN POCKETS TYP.
7. MINIMUM COLUMN TIES SHALL BE #4 GRADE 60 CLOSED TIES AS FOLLOWS:
   a. AT 16" OC (MAX SPACING) TYP AND FOR ADDED TIES AT REINFORCEMENT BELOW AND BETWEEN POCKETS.
   b. ADD (4) TIES @ 3" OC BELOW EACH POCKET
   c. ADD (2) TIES @ 3" OC ABOVE EACH POCKET
   d. ADD (4) TIES @ 3" OC @ TOP & BOTTOM OF COLUMN
   e. ADD (3) TIES @ 3" OC ABOVE & BELOW HAUNCHES
   f. ADD (1) TIE ABOVE & BELOW COIL ROD INSERTS.
8. FOR EMBED PLATES TO RECEIVE WELDS AS PART OF WELDED CONNECTIONS, SEE 7/S-524.
9. TORSION STABILITY CONNECTIONS TOP & BOTTOM EACH END OF BEAM BY PRECASTER. SEE DETAILS 8/S-520 & 3/S-525 FOR EXAMPLES.

UNCW
UNIVERSITY of NORTH CAROLINA WILMINGTON
601 S COLLEGE ROAD
WILMINGTON, NORTH CAROLINA 28403

PARKING DECK II AND SURFACE PARKING (DESIGN-BUILD)
SOUTH CAMPUS - 4965 RIEGEL ROAD

SCO ID NUMBER: 18-19226-01A
CODE: 441828
ITEM: 301

CONTRACTOR
Balfour Beatty Construction

DESIGNER
CLARKNEXSEN
1523 ELIZABETH AVENUE, SUITE 300
CHARLOTTE, NORTH CAROLINA 28204
704.377.8800
CLARK NEXSEN LICENSE NUMBER: C-1028

WALKER CONSULTANTS
13860 Ballantyne Corporate Place
Suite 140
Charlotte, NC 28277
T: 704.247.6230
www.walkerconsultants.com
NC License No. F-0518

McKIM&CREED
CIVIL ENGINEER
243 NORTH FRONT STREET
WILMINGTON, NORTH CAROLINA
28401
910.343.1048

PROFESSIONAL SEAL

NORTH CAROLINA PROFESSIONAL SEAL 028007 ENGINEER JOEY D. ROWLAND
NOT FOR CONSTRUCTION

SUBMITTAL
03-29-2019
75% CONSTRUCTION DOCUMENTS

REVISIONS

KEY PLAN

SHEET
P/C COLUMN DETAILS

S-525

DESIGN: Designer
DRAWN: Author
REVIEW: Checker

CN PROJECT NUMBER

4/1/2019 7:51:45 AM
C:\Revit Projects\UNC Wilmington Deck II_r17_ory grantham.rvt

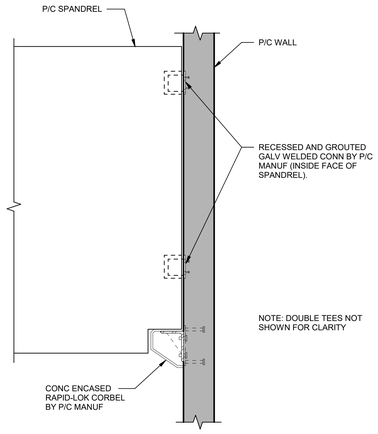

8 SPANDREL/WALL DETAIL
3/4" = 1'-0"

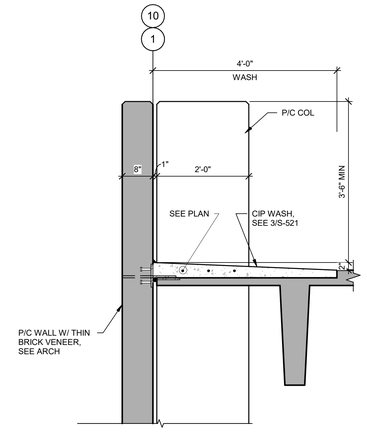

5 SECTION
3/4" = 1'-0"

KEY NOTES

N12. SLOPE BEARING PLATES IN BEAMS AND SUPPORT PLATES IN COLUMNS, AS REQ'D, TO PROVIDE UNIFORM BEARING ON PADS (TYPICAL).
N20. #5 (MIN) X 7'-0" @ EACH TEE STEM.
N21. #4 L-BAR W/ 2'-0" LEGS, SPACE TO MATCH COIL ROD SPACING.
N22. #4 X 3'-0" W/ 180° STD HOOK @ 4'-0" OC AND 1-#4 X CONTINUOUS.
N23. CHORD STEEL. SEE PLAN.
N27. 6" X 6" W2.9 X W2.9 ADDED WWF.
N28. #5 (MIN) X 4'-6" @ EACH TEE STEM.
N30. WELDED COLUMN BRACING CONNECTION BY PRECASTER.
N31. 3/4" DIA INSERT AND COIL ROD X 2'-6" (6" FROM EDGE OF EACH POCKET) W/ #4 HAIRPIN W/ 2'-0" LEGS AROUND INSERT AND 1-#4 CONTINUOUS.
N32. 3/4" DIA INSERT/COIL ROD (GALV) X 2'-6" @ 4' OC W/ 2-#4 CONTINUOUS ADJUST INSERT ELEV FOR TEE CAMBER.
N33. 3/4" DIA INSERT/COIL ROD (GALV) X 2'-6" @ EACH TEE STEM W/ 2-#4 CONTINUOUS.
N34. ERECTION CONNECTION BY PRECASTER.
N35. TORSIONSTABILITY CONNECTIONS TOP & BOT EA EACH END OF BEAM BY PRECASTER. SEE DETAILS ON SHEET S-525 FOR EXAMPLES.
N36. CONNECTION REQUIRED TO RESIST BUMPER LOAD FORCES.
N40. COVE SEALANT. SEE DETAIL 1/S-570.
N42. CONTINUOUS ETHAFOAM CONC DAM AS REQ'D.
N43. TOOLED JOINT W/ SEALANT.
N50. SORBTEX BRG PAD X 1/2", GLUE TO BEAM.
N51. RANDOM ORIENTED FIBER REINFORCED BRG. PAD X 3/8", GLUE TO TEE STEM.
N52. SORBTEX BRG PAD X 1/2", GLUE TO BEAM, AT EACH END OF BEAM. PROVIDE HOLE IN PAD FOR BOLT AT REQUIRED LOCATIONS.
N53. SORBTEX BRG PAD X 1/2", GLUE TO COLUMN POCKET.
N60. TOP OF COLUMN AT TOP TIER.
N63. USE FORM WHERE BOTTOM OF TEE FLANGE RISES ABOVE TOP OF BEAM.

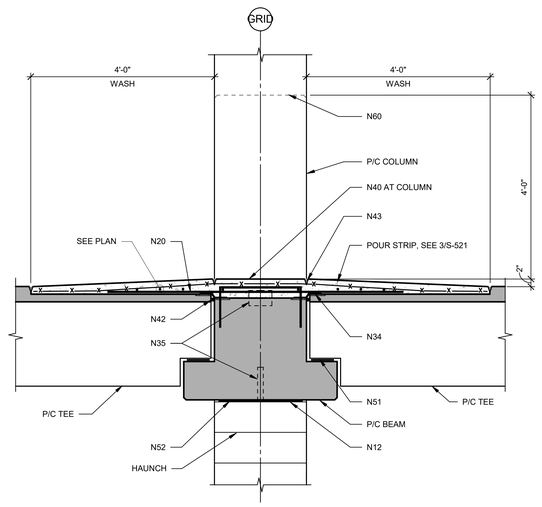

7 SECTION
3/4" = 1'-0"

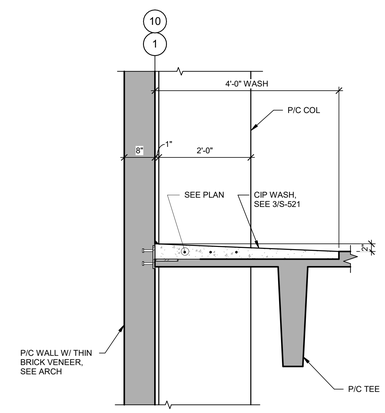

4 SECTION
3/4" = 1'-0"

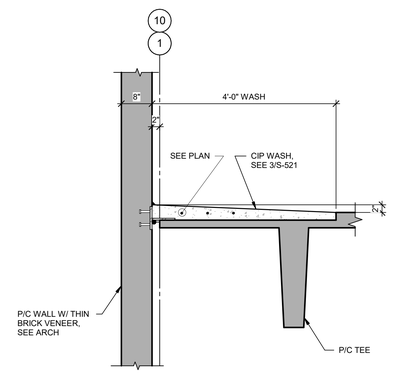

2 SECTION
3/4" = 1'-0"

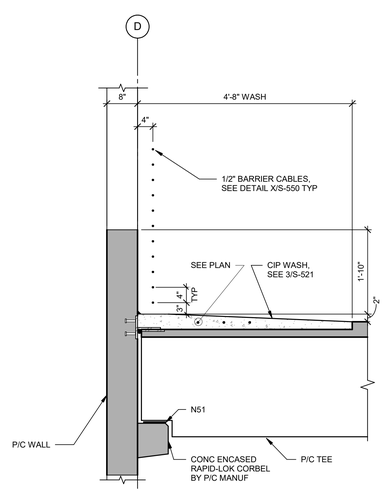

6 SECTION
3/4" = 1'-0"

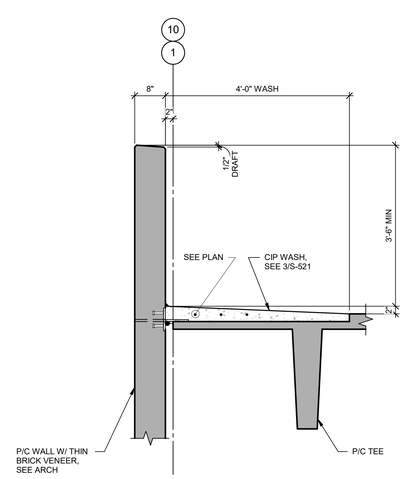

3 SECTION
3/4" = 1'-0"

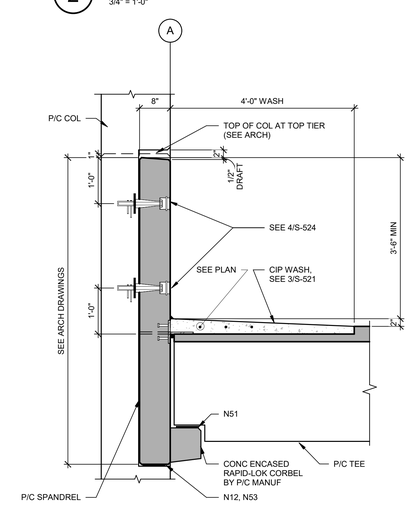

1 SECTION
3/4" = 1'-0"

UNCW
UNIVERSITY of NORTH CAROLINA WILMINGTON
601 S COLLEGE ROAD
WILMINGTON, NORTH CAROLINA 28403

PARKING DECK II AND SURFACE PARKING (DESIGN-BUILD)
SOUTH CAMPUS - 4965 RIEGEL ROAD

SCO ID NUMBER: 18-19226-01A
CODE: 441828
ITEM: 301

CONTRACTOR
Balfour Beatty Construction

DESIGNER
CLARKNEXSEN
1523 ELIZABETH AVENUE, SUITE 300
CHARLOTTE, NORTH CAROLINA 28204
704 377 8800

CLARK NEXSEN LICENSE NUMBER: C-1028

WALKER CONSULTANTS
13860 Ballantyne Corporate Place
Suite 140
Charlotte, NC 28277
T: 704.247.6230
www.walkerconsultants.com
NC License No. F-0518

McKIM&CREED
CIVIL ENGINEER
243 NORTH FRONT STREET
WILMINGTON, NORTH CAROLINA
28401
910.343.1048

PROFESSIONAL SEAL
NOT FOR CONSTRUCTION
NORTH CAROLINA PROFESSIONAL SEAL 028007 ENGINEER JOEY D. ROWLAND

SUBMITTAL
03-29-2019
75% CONSTRUCTION DOCUMENTS

REVISIONS

KEY PLAN

SHEET
STRUCTURAL DETAILS

S-540

DESIGN: Designer
DRAWN: Author
REVIEW: Checker

CN PROJECT NUMBER

4/1/2019 7:51:47 AM
C:\Revit Projects\UNC Wilmington Deck II_v17_roy.grantham.rvt

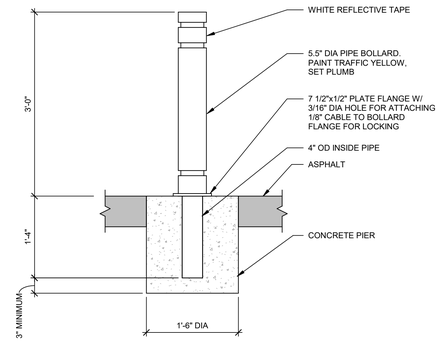

9 PIPE BOLLARD DETAIL
1" = 1'-0"

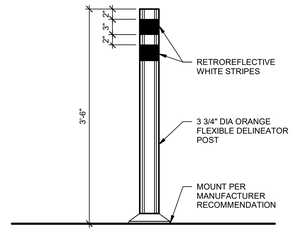

6 DELINEATOR POST
1" = 1'-0"

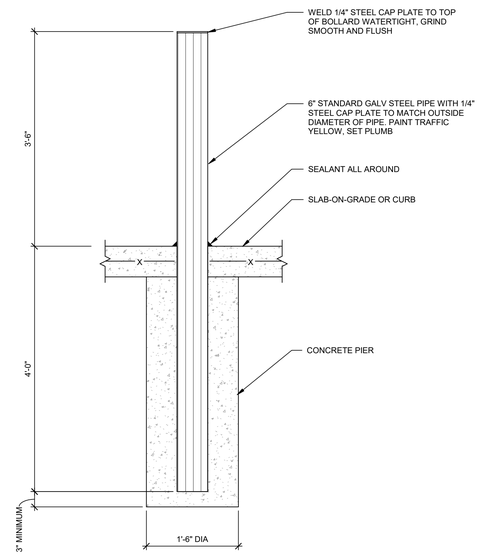

8 PIPE BOLLARD DETAIL
1" = 1'-0"

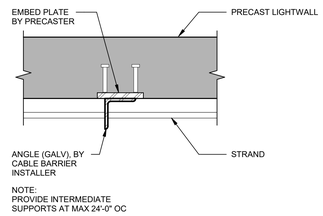

5 STRAND INTERMEDIATE SUPPORT DETAIL
1 1/2" = 1'-0"

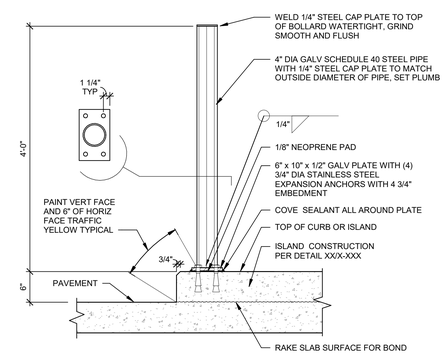

NOTE:
1. PAINT ENTIRE PIPE GUARD ASSEMBLY ABOVE FLOOR TRAFFIC YELLOW.
2. PARCS VENDOR AND GENERAL CONTRACTOR TO COORDINATE FINAL LOCATION OF PIPE BOLLARD WITH EQUIPMENT ACCESS REQUIREMENTS.
3. IF SLIP FORM CURB PROPOSED, CONTACT WALKER PROJECT MANAGER FOR ALTERNATE DETAIL.

7 PACS - PIPE BOLLARD
1" = 1'-0"

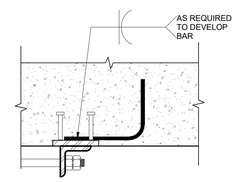

PLAN VIEW A-A

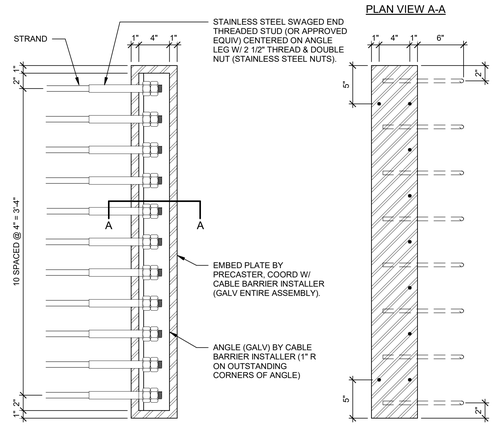

EMBED PLATE DETAIL

4 STRAND END ANCHOR
1 1/2" = 1'-0"

SHEET NOTES

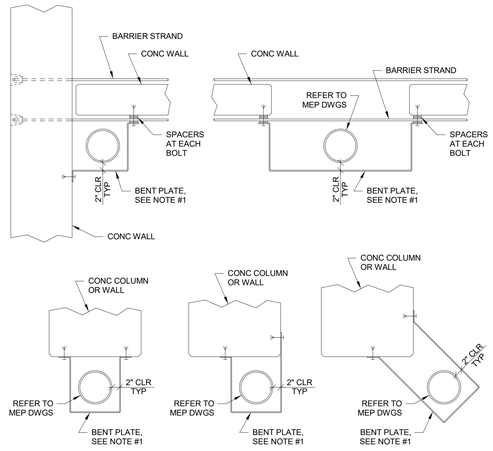

NOTE:
1. BENT PLATE 1/4" x 1'-0" HIGH w/ (4) 1/2" □ EXP. ANCHORS, MOUNT BOTTOM EDGE OF GUARD AT 1'-2" ABOVE FLOOR LEVEL OR 2" ABOVE CLEANOUT.

3 PIPE GUARD DETAILS
3/4" = 1'-0"

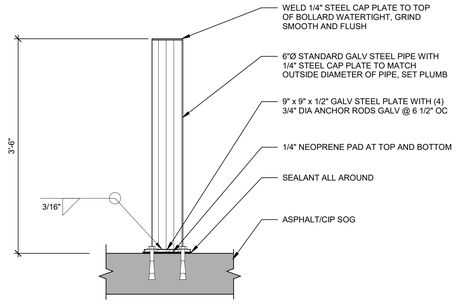

NOTE:
1. PAINT ENTIRE PIPE GUARD ASSEMBLY ABOVE FLOOR TRAFFIC YELLOW

2 PIPE BOLLARD DETAIL
1" = 1'-0"

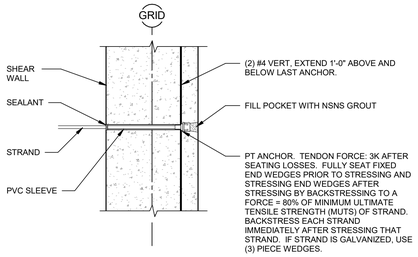

1 STRAND END ANCHOR DETAIL
3/4" = 1'-0"

UNCW
UNIVERSITY of NORTH CAROLINA WILMINGTON
601 S COLLEGE ROAD
WILMINGTON, NORTH CAROLINA 28403

PARKING DECK II AND SURFACE PARKING (DESIGN-BUILD)
SOUTH CAMPUS - 4965 RIEGEL ROAD

SCO ID NUMBER: 18-19226-01A
CODE: 441828
ITEM: 301

CONTRACTOR
Balfour Beatty Construction

DESIGNER
CLARKNEXSEN
1523 ELIZABETH AVENUE, SUITE 300
CHARLOTTE, NORTH CAROLINA 28204
704.377.8800
CLARK NEXSEN LICENSE NUMBER: C-1028

WALKER CONSULTANTS
13860 Ballantyne Corporate Place
Suite 140
Charlotte, NC 28277
T: 704.247.6230
www.walkerconsultants.com
NC License No. F-0518

McKIM&CREED
CIVIL ENGINEER
243 NORTH FRONT STREET
WILMINGTON, NORTH CAROLINA
28401
910.343.1048

PROFESSIONAL SEAL
NORTH CAROLINA PROFESSIONAL SEAL 028007 ENGINEER JOEY D. ROWLAND
NOT FOR CONSTRUCTION

SUBMITTAL
03-29-2019
75% CONSTRUCTION DOCUMENTS

REVISIONS

KEY PLAN

SHEET
MISC METALS DETAILS

S-550

DESIGN: Designer
DRAWN: Author
REVIEW: Checker

CN PROJECT NUMBER

4/1/2019 7:51:49 AM
C:\Revit Projects\UNC Wilmington Deck II_r17_rsy.grantham.rvt

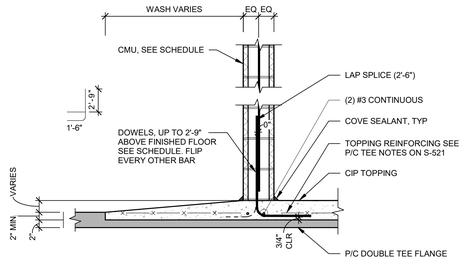

NOTES:
1. SEE SCHEDULE FOR WALL INFORMATION.

11 MASONRY DETAIL
3/4" = 1'-0"

CMU WALL SCHEDULE #					
WALL MARK	SIZE	VERT. REINF.	HORIZ. REINF.	DOWELS	NOTES
1	8"	#5 @ 4'-0"	9GA. TRUSS TYPE @ 16" O.C.	AT ALL VERTICAL REINFORCING	WHERE WALL SEGMENT IS 2'-6" OR LESS PROVIDE VERTICAL BAR AT EACH CORNER OR END AND ONE IN THE MIDDLE (3 BARS)
2	8"	#5 @ 8" TO 2'-8"A.F.F. #5 @ 4'-0" TO TOP (PROVIDE LAP SPLICE)	9GA. TRUSS TYPE @ 16" O.C.	AT ALL VERTICAL REINFORCING	WHERE WALL SEGMENT IS 4'-0" OR LESS PROVIDE VERTICAL BAR AT EACH CORNER OR END AND ONE IN THE MIDDLE (3 BARS)

10 MASONRY REBAR SCHEDULE
3/4" = 1'-0"

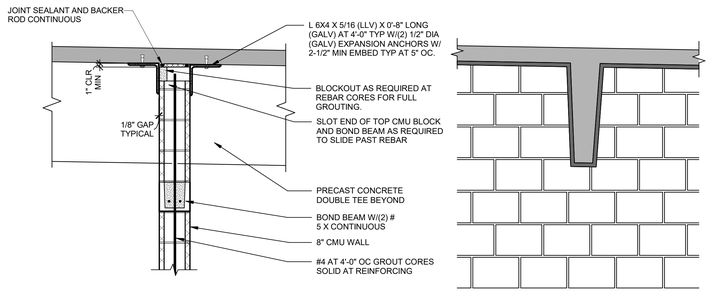

9 MASONRY WALL DETAIL
3/4" = 1'-0"

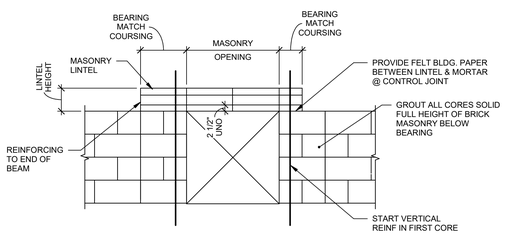

LINTEL SCHEDULE						
MARK	BLOCK WIDTH	MAX MASONRY OPENING	LINTEL BLOCK HEIGHT	REINFORCING	BEARING	REMARKS
L1	8"	4'-0"	8"	(2)-#5	8" MIN	SEE 3/S-560
L2	8"	12'-0"	2'-0"	(2)-#6 T&B	12" MIN	SEE 2/S-560

8 MASONRY LINTEL SCHEDULE
3/4" = 1'-0"

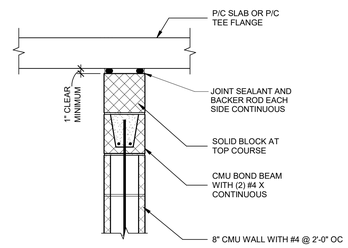

7 SLAB/WALL DETAIL
1" = 1'-0"

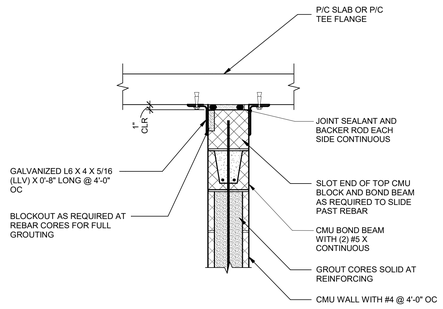

6 SLAB/WALL DETAIL
1" = 1'-0"

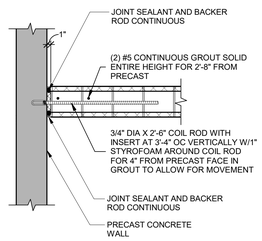

5 MASONRY DETAIL
3/4" = 1'-0"

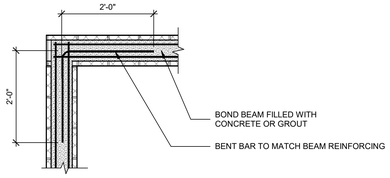

NOTES:
1. BOND BEAMS AT TOP OF WALL SHALL BE CONTINUOUS THROUGH MASONRY CONTROL JOINTS. INTERMEDIATE BOND BEAMS SHALL BE DISCONTINUOUS AT MASONRY CONTROL JOINTS.
2. MINIMUM BOND BEAM REINFORCING SHALL BE 2-#5 IN ALL BOND BEAMS.

4 CORNER REINFORCEMENT
3/4" = 1'-0"

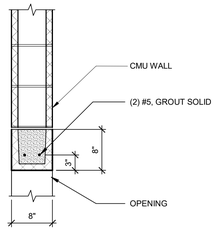

3 MASONRY LINTEL DETAIL
1" = 1'-0"

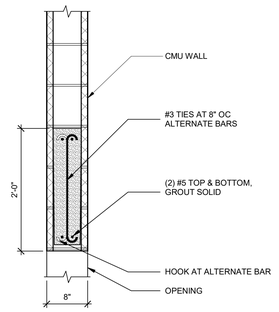

NOTE:
ENGINEER MUST VERIFY LOADS AND SPANS FOR THIS DETAIL

2 MASONRY LINTEL DETAIL
1" = 1'-0"

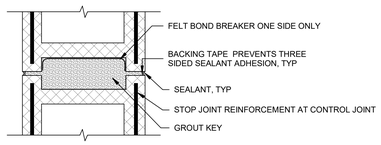

NOTES:
1. CONTROL JOINTS ARE REQUIRED IN MASONRY WALL AT 20'-0" MAX.
2. LOCATE NEAR CENTER OF WALL.

1 MASONRY CONTROL JOINT DETAIL
3" = 1'-0"

UNCW
UNIVERSITY of NORTH CAROLINA WILMINGTON
601 S COLLEGE ROAD
WILMINGTON, NORTH CAROLINA 28403

PARKING DECK II AND SURFACE PARKING (DESIGN-BUILD)
SOUTH CAMPUS - 4965 RIEGEL ROAD

SCO ID NUMBER: 18-19226-01A
CODE: 441828
ITEM: 301

CONTRACTOR
Balfour Beatty Construction

DESIGNER
CLARKNEXSEN
1523 ELIZABETH AVENUE, SUITE 300
CHARLOTTE, NORTH CAROLINA 28204
704.377.8800
CLARK NEXSEN LICENSE NUMBER: C-1028

WALKER CONSULTANTS
13860 Ballantyne Corporate Place
Suite 140
Charlotte, NC 28277
T: 704.247.6230
www.walkerconsultants.com
NC License No. F-0518

McKIM&CREED
CIVIL ENGINEER
243 NORTH FRONT STREET
WILMINGTON, NORTH CAROLINA
28401
910.343.1048

PROFESSIONAL SEAL
NOT FOR CONSTRUCTION
NORTH CAROLINA PROFESSIONAL SEAL 028007 ENGINEER JOEY D. ROWLAND

SUBMITTAL
03-29-2019
75% CONSTRUCTION DOCUMENTS

REVISIONS

KEY PLAN

SHEET
MASONRY DETAILS

S-560

DESIGN: Designer
DRAWN: Author
REVIEW: Checker

CN PROJECT NUMBER

4/1/2019 7:51:50 AM
C:\Revit Projects\UNC Wilmington Deck II_r17_crsy.grantham.rvt

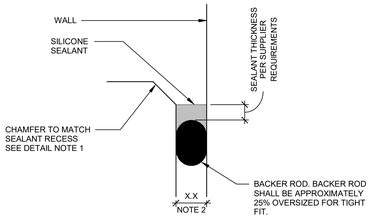

NOTE:
1. WHEN JOINT WIDTH IS 0"-1", RECESS SEALANT 1/4". JOINTS 1"-3". RECESS SEALANT 3/8"

9 FIELD APPLIED SILICONE SEALANT EXPANSION JOINT DETAIL

12" = 1'-0"

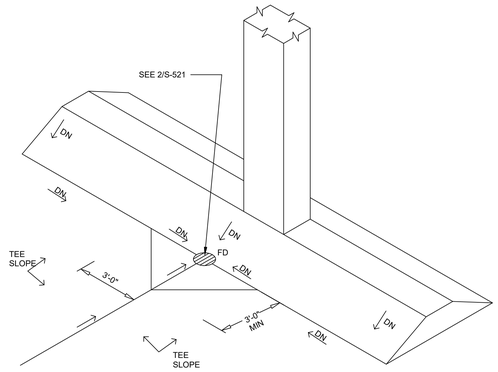

6 CIP WASH SLOPE DETAIL

1/4" = 1'-0"

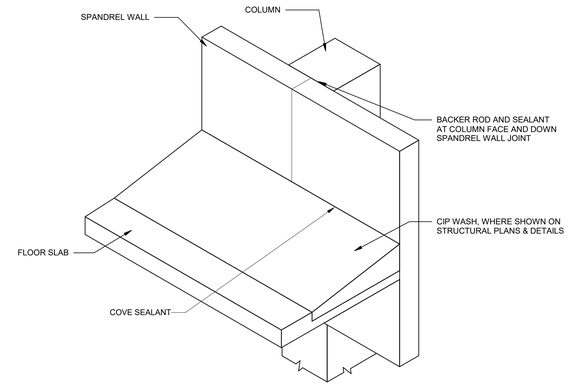

NOTES:
1. TOOLED JOINT AND SEALANT IN CIP WASH AT ALL P/C JOINTS BELOW TYP.
2. DETAIL SIMILAR AT SHEAR WALLS AND WALL PANELS.

3 INSIDE FACE OF WALL/CURB/COLUMN SEALANT TOP TIER ONLY

3/4" = 1'-0"

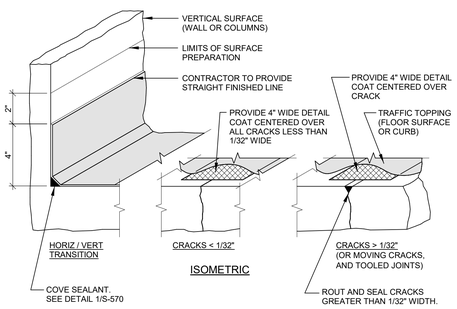

8 TRAFFIC TOPPING DETAIL

3" = 1'-0"

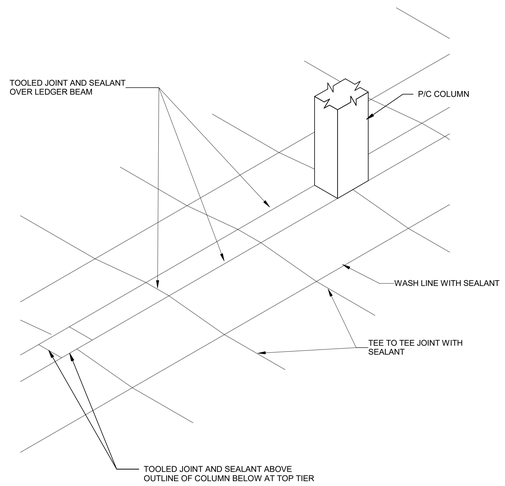

5 SEALANT ISOMETRIC

1/4" = 1'-0"

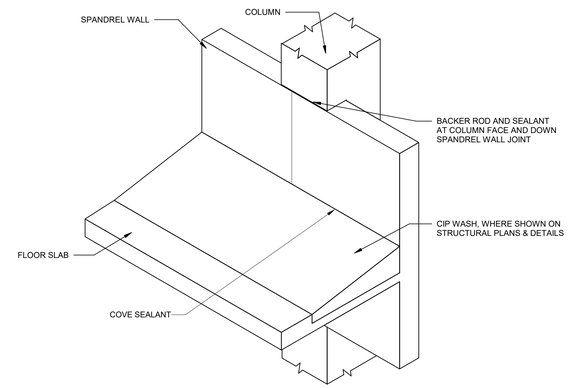

NOTES:
1. TOOLED JOINT AND SEALANT IN CIP WASH AT ALL P/C JOINTS BELOW TYP.
2. DETAIL SIMILAR AT SHEAR WALLS AND WALL PANELS.

2 INSIDE FACE OF WALL/CURB/COLUMN SEALANT

3/4" = 1'-0"

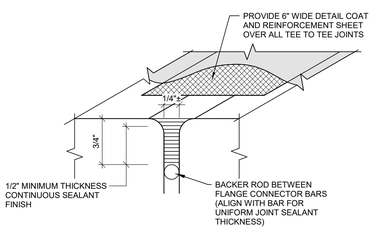

7 TRAFFIC TOPPING AT JOINT SEALANT DETAIL

12" = 1'-0"

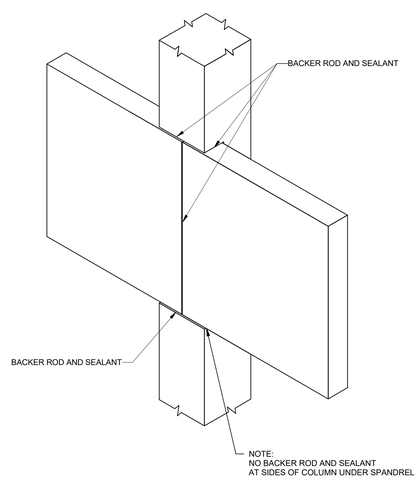

4 EXTERIOR FACADE SEALANT

3/4" = 1'-0"

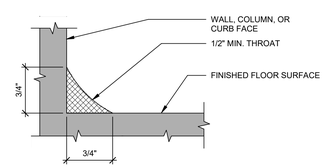

NOTES:
1. PREPARE & ALLOW FOR PRIMER TO CURE PROPERLY PRIOR TO INSTALLING SEALANT.
2. SEE SPECIFICATIONS FOR APPROVED MATERIALS.
3. DETAIL NOT TO SCALE.

1 COVE SEALANT

UNIVERSITY of NORTH CAROLINA WILMINGTON
601 S COLLEGE ROAD
WILMINGTON, NORTH CAROLINA 28403

PARKING DECK II AND SURFACE PARKING (DESIGN-BUILD)
SOUTH CAMPUS - 4965 RIEGEL ROAD

SCO ID NUMBER: 18-19226-01A
CODE: 441828
ITEM: 301

CONTRACTOR
Balfour Beatty Construction

DESIGNER
CLARKNEXSEN
1523 ELIZABETH AVENUE, SUITE 300
CHARLOTTE, NORTH CAROLINA 28204
704.377.8800

CLARK NEXSEN LICENSE NUMBER: C-1028

WALKER CONSULTANTS
13860 Ballantyne Corporate Place
Suite 140
Charlotte, NC 28277
T: 704.247.6230
www.walkerconsultants.com
NC License No. F-0518

McKIM&CREED
CIVIL ENGINEER
243 NORTH FRONT STREET
WILMINGTON, NORTH CAROLINA
28401
910.343.1048

PROFESSIONAL SEAL
NOT FOR CONSTRUCTION
NORTH CAROLINA PROFESSIONAL SEAL 028007 ENGINEER JOEY D. ROWLAND

SUBMITTAL
03-29-2019
75% CONSTRUCTION DOCUMENTS

REVISIONS

KEY PLAN

SHEET
WATERPROOFING & EXPANSION JOINT DETAILS

S-570

DESIGN: Designer
DRAWN: Author
REVIEW: Checker

CN PROJECT NUMBER

4/1/2019 7:51:51 AM
C:\Revit Projects\UNC Wilmington Deck II_r17_roy.grantham.rvt

SHEET NOTES

EXPANSION JOINT NOTES:

1. EXPANSION JOINTS ARE PERFORMANCE DESIGN. EXPANSION JOINT SYSTEM SHALL BE DETERMINED BY EXPANSION JOINT SUPPLIER AS REQUIRED TO MEET MOVEMENT AND OTHER CRITERIA DEFINED ON DRAWINGS AND IN SPECIFICATIONS.
2. FORM WIDTH SHOWN IN DETAILS IS A NOMINAL FORM WIDTH. INITIAL FORM WIDTH AT TIME OF CONCRETE PLACEMENT IS ADJUSTABLE AND IS PART OF PERFORMANCE DESIGN. INITIAL FORM WIDTH SHALL BE DETERMINED BY EXPANSION JOINT SUPPLIER AND COORDINATED WITH GENERAL CONTRACTOR. WIDTH DETERMINATION SHALL TAKE INTO CONSIDERATION TEMPERATURE PREVAILING AT TIME OF CONCRETE PLACEMENT, VOLUME CHANGE MOVEMENT THAT OCCURS BETWEEN TIME OF CONCRETE PLACEMENT AND TIME OF JOINT INSTALLATION, REQUIRED INSTALLATION WIDTH, FINAL MAXIMUM AND MINIMUM OPENING WIDTH, SEISMIC MOVEMENT, ETC. REFER TO EXPANSION JOINT MOVEMENT TABLE.
3. EXPANSION JOINT SYSTEM SHALL BE CAPABLE OF HANDLING DIFFERENTIAL VERTICAL MOVEMENT OF 1/2" INCH.
4. ONCE FORMED, JOINTS AND BLOCKOUTS SHALL BE PROTECTED FROM DAMAGE DUE TO CONSTRUCTION TRAFFIC.
5. IN SERVICE GAP WIDTH MUST ACCOMMODATE SEISMIC MOVEMENT WITHOUT ALLOWING CONCRETE EDGES OR ANY ELEMENTS OF EXPANSION JOINT ASSEMBLY TO "POUND" TOGETHER.
6. TOP PLATES MUST BE SIZED AND DESIGNED TO REMAIN IN SERVICE DURING AND AFTER DESIGN SEISMIC EVENT.

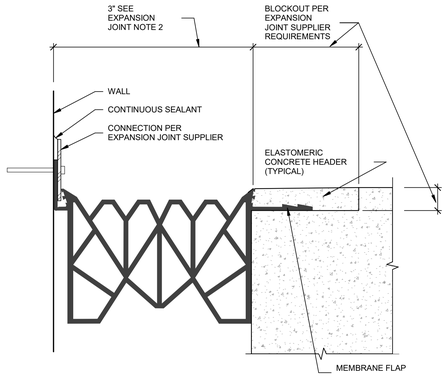

2 ELASTOMERIC CONC EDGED, EXTRUDED RUBBER EJ DETAIL
6" = 1'-0"

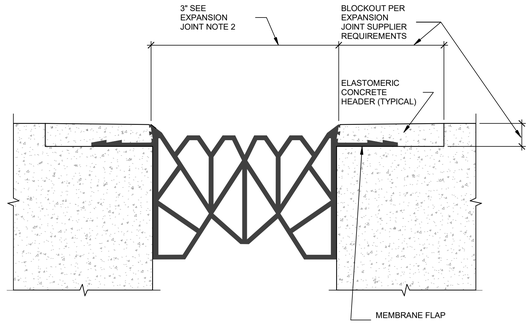

1 ELASTOMERIC CONC EDGED, EXTRUDED RUBBER EJ DETAIL
6" = 1'-0"

UNCW
UNIVERSITY of NORTH CAROLINA WILMINGTON
601 S COLLEGE ROAD
WILMINGTON, NORTH CAROLINA 28403

PARKING DECK II AND SURFACE PARKING (DESIGN-BUILD)
SOUTH CAMPUS - 4965 RIEGEL ROAD

SCO ID NUMBER: 18-19226-01A
CODE: 441828
ITEM: 301

CONTRACTOR
Balfour Beatty Construction

DESIGNER

CLARKNEXSEN
1523 ELIZABETH AVENUE, SUITE 300
CHARLOTTE, NORTH CAROLINA 28204
704.377.8800

CLARK NEXSEN LICENSE NUMBER: C-1028

WALKER CONSULTANTS
13860 Ballantyne Corporate Place
Suite 140
Charlotte, NC 28277
T: 704.247.6230
www.walkerconsultants.com
NC License No. F-0518

McKIM&CREED
CIVIL ENGINEER
243 NORTH FRONT STREET
WILMINGTON, NORTH CAROLINA
28401
910.343.1048

PROFESSIONAL SEAL
NOT FOR CONSTRUCTION
NORTH CAROLINA PROFESSIONAL SEAL 028007 ENGINEER JOEY D. ROWLAND

SUBMITTAL
03-29-2019
75% CONSTRUCTION DOCUMENTS

REVISIONS

KEY PLAN

SHEET
WATERPROOFING & EXPANSION JOINT DETAILS

S-571

DESIGN: Designer
DRAWN: Author
REVIEW: Checker

CN PROJECT NUMBER

4/1/2019 7:51:52 AM
C:\Revit Projects\UNC Wilmington Deck II_r17_ory.grantham.rvt

UNCOATED		TABLE 1 - TENSION DEVELOPMENT AND LAP SPLICE LENGTHS FOR UNCOATED BARS WITH CENTER TO CENTER SPACING NOT LESS THAN 5*d_b AND CLEAR COVER AT LEAST 2*d_b															
SEE GENERAL SHEET NOTES FOR FURTHER INFORMATION		LENGTHS (IN) PER CONCRETE STRENGTH														MIN CLEAR COVER (IN)	MIN CENTER TO CENTER SPACING (IN)
		f'_c = 4000 PSI		f'_c = 5000 PSI		f'_c = 6000 PSI		f'_c = 7000 PSI		f'_c = 8000 PSI		f'_c = 9000 PSI		f'_c = 10000 PSI OR GREATER			
BAR SIZE	LAP CLASS	12"CASTING POSITION	OTHER BARS	12"CASTING POSITION	OTHER BARS	12"CASTING POSITION	OTHER BARS	12"CASTING POSITION	OTHER BARS	12"CASTING POSITION	OTHER BARS	12"CASTING POSITION	OTHER BARS	12"CASTING POSITION	OTHER BARS		
#3	A	12	12	12	12	12	12	12	12	12	12	12	12	12	12	3/4	1 7/8
(#10)	B	16	16	16	16	16	16	16	16	16	16	16	16	16	16		
#4	A	15	12	14	12	12	12	12	12	12	12	12	12	12	12	1	2 1/2
(#13)	B	20	16	18	16	16	16	16	16	16	16	16	16	16	16		
#5	A	19	15	17	13	15	12	14	12	13	12	13	12	12	12	1 1/4	3 1/8
(#16)	B	24	19	22	17	20	16	18	16	17	16	16	16	16	16		
#6	A	22	17	20	16	18	14	17	13	16	12	15	12	14	12	1 1/2	3 3/4
(#19)	B	29	22	26	20	24	18	22	17	21	16	20	16	19	16		
#7	A	33	25	29	23	27	21	25	19	23	18	22	17	21	16	1 3/4	4 3/8
(#22)	B	43	33	38	29	35	27	32	25	30	23	28	22	27	21		
#8	A	37	29	33	26	30	24	28	22	26	20	25	19	24	18	2	5
(#25)	B	49	37	43	33	40	31	37	28	34	27	32	25	31	24		
#9	A	42	33	38	29	34	27	32	25	30	23	28	22	27	21	2 1/4	5 3/4
(#29)	B	55	42	49	38	45	34	41	32	39	30	36	28	35	27		
#10	A	47	37	42	33	39	30	36	28	34	26	32	24	30	23	2 5/8	6 3/8
(#32)	B	62	47	55	42	50	39	47	36	44	34	41	32	39	30		
#11	A	53	41	47	36	43	33	40	31	37	29	35	27	33	26	2 7/8	7 1/8
(#36)	B	68	53	61	47	56	43	52	40	48	37	46	35	43	33		
#14 (#43)	N/A	63	49	56	43	51	40	48	37	45	34	42	32	40	31	3 1/2	8 1/2
#18 (#57)	N/A	84	65	75	58	68	53	63	49	59	46	56	43	53	41	4 1/2	11 3/8

UNCOATED		TABLE 2 - TENSION DEVELOPMENT AND LAP SPLICED LENGTHS FOR UNCOATED BARS (SEE QUALIFYING CASES BELOW)																											
SEE GENERAL SHEET NOTES FOR FURTHER INFORMATION		LENGTHS (IN) PER CONCRETE STRENGTH																											
		f'_c = 4000 PSI				f'_c = 5000 PSI				f'_c = 6000 PSI				f'_c = 7000 PSI				f'_c = 8000 PSI				f'_c = 9000 PSI				f'_c = 10000 PSI OR GREATER			
		12" CASTING POSITION		OTHER BARS		12" CASTING POSITION		OTHER BARS		12" CASTING POSITION		OTHER BARS		12" CASTING POSITION		OTHER BARS		12" CASTING POSITION		OTHER BARS		12" CASTING POSITION		OTHER BARS		12" CASTING POSITION		OTHER BARS	
BAR SIZE	LAP CLASS	CASE 1	CASE 2	CASE 1	CASE 2	CASE 1	CASE 2	CASE 1	CASE 2	CASE 1	CASE 2	CASE 1	CASE 2	CASE 1	CASE 2	CASE 1	CASE 2	CASE 1	CASE 2	CASE 1	CASE 2	CASE 1	CASE 2	CASE 1	CASE 2	CASE 1	CASE 2	CASE 1	CASE 2
#3	A	19	28	15	22	17	25	13	19	15	23	12	18	14	21	12	16	13	20	12	15	13	19	12	15	12	18	12	14
(#10)	B	24	36	19	28	22	33	17	25	20	30	16	23	18	28	16	21	17	26	16	20	16	24	16	19	16	23	16	18
#4	A	25	37	19	29	22	33	17	26	20	31	16	24	19	28	15	22	18	26	14	20	17	25	13	19	16	24	12	18
(#13)	B	32	48	25	37	29	43	22	33	26	40	20	31	25	37	19	28	23	34	18	26	22	32	17	25	21	31	16	24
#5	A	31	47	24	36	28	42	22	32	25	38	20	29	24	35	18	27	22	33	17	25	21	31	16	24	20	30	15	23
(#16)	B	40	60	31	47	36	54	28	42	33	49	25	38	31	46	24	35	29	43	22	33	27	40	21	31	26	38	20	30
#6	A	37	56	29	43	33	50	26	38	31	46	24	35	28	42	22	33	26	40	20	30	25	37	19	29	24	36	18	27
(#19)	B	48	72	37	56	43	65	33	50	40	59	31	46	37	55	28	42	34	51	26	40	32	48	25	37	31	46	24	35
#7	A	54	81	42	63	49	73	37	56	44	66	34	51	41	62	32	47	38	58	30	44	36	54	28	42	35	52	27	40
(#22)	B	70	106	54	81	63	94	49	73	58	86	44	66	53	80	41	62	50	75	38	58	47	70	36	54	45	67	34	52
#8	A	62	93	48	71	55	83	43	64	51	76	39	58	47	70	36	54	44	66	34	51	41	62	32	48	39	59	30	45
(#25)	B	80	121	62	93	72	108	55	83	66	98	51	76	61	91	47	70	57	85	44	66	54	80	41	62	51	76	39	59
#9	A	70	105	54	81	63	94	48	72	57	86	44	66	53	79	41	61	49	74	38	57	47	70	36	54	44	66	34	51
(#29)	B	91	136	70	105	81	122	63	94	74	111	57	86	69	103	53	79	64	96	49	74	61	91	47	70	57	86	44	66
#10	A	79	118	61	91	70	105	54	81	64	96	49	74	59	89	46	69	56	83	43	64	53	79	41	61	50	75	39	58
(#32)	B	102	153	79	118	91	137	70	105	83	125	64	96	77	116	59	89	72	108	56	83	68	102	53	79	65	97	50	75
#11	A	87	131	67	101	78	117	60	90	71	107	55	82	66	99	51	76	62	93	48	71	58	87	45	67	55	83	43	64
(#36)	B	113	170	87	131	101	152	78	117	93	139	71	107	86	128	66	99	80	120	62	93	76	113	58	87	72	108	55	83
#14 (#43)	N/A	105	157	81	121	94	140	72	108	86	128	66	99	79	119	61	91	74	111	57	85	70	105	54	81	66	99	51	77
#18 (#57)	N/A	139	209	107	161	125	187	96	144	114	171	88	131	106	158	81	122	99	148	76	114	93	139	72	107	88	132	68	102

TABLE 2 QUALIFIERS				
	CASE 1	CENTER TO CENTER SPACING OF BARS BEING DEVELOPED OR LAP SPLICED NOT LESS THAN 2*d_b, CLEAR COVER AT LEAST d_b AND OCCURS WITHIN THE STIRRUPS OR TIES OF A BEAM OR COLUMN.	OR	CENTER TO CENTER SPACING OF BARS OF BEING DEVELOPED OR LAP SPLICED AT LEAST 3* d_b AND CLEAR COVER AT LEAST d_b
	CASE 2	CENTER TO CENTER SPACING OF BARS BEING DEVELOPED OR LAP SPLICED NOT LESS THAN 2*d_b, AND NO LESS THAN MINIMUM CLEAR SPACING SPECIFIED IN GENERAL SHEET NOTES.	AND	CLEAR COVER NOT LESS THAN 0.5*d_b AND NO LESS THAN CLEAR COVER SPECIFIED IN GENERAL STRUCTURAL NOTES.

f'_c = 4000 PSI		TABLE 3 (f'_c = 4000 PSI) - TENSION DEVELOPMENT AND LAP SPLICE LENGTHS FOR BARS IN WALLS AND SLABS (IN)																				
SEE GENERAL SHEET NOTES FOR FURTHER INFORMATION		MINIMUM CONCRETE COVER = 0.75"					MINIMUM CONCRETE COVER = 1.00"					MINIMUM CONCRETE COVER = 1.50"					MINIMUM CONCRETE COVER = 2.00"				
		12" CASTING POSITION	OTHER BARS	12" CASTING POSITION	OTHER BARS	MINIMUM CENTER TO CENTER SPACING	12" CASTING POSITION	OTHER BARS	12" CASTING POSITION	OTHER BARS	MINIMUM CENTER TO CENTER SPACING	12" CASTING POSITION	OTHER BARS	12" CASTING POSITION	OTHER BARS	MINIMUM CENTER TO CENTER SPACING	12" CASTING POSITION	OTHER BARS	12" CASTING POSITION	OTHER BARS	MINIMUM CENTER TO CENTER SPACING
		UNCOATED		EPOXY COATED			UNCOATED		EPOXY COATED			UNCOATED		EPOXY COATED			UNCOATED		EPOXY COATED		
#3	A	12	12	15	13	1 7/8	12	12	15	13	1 7/8	12	12	14	12	1 7/8 UNC	12	12	14	12	1 7/8 UNC
(#10)	B	16	16	19	17		16	16	19	17		16	16	18	16	2 5/8 EPOXY	16	16	18	16	2 5/8 EPOXY
#4	A	19	15	24	22	2	15	12	20	17	2 1/2	15	12	18	14	2 1/2 UNC	15	12	18	14	2 1/2 UNC
(#13)	B	24	19	32	28		20	16	25	22		20	16	23	18	3 1/2 EPOXY	20	16	23	18	3 1/2 EPOXY
#5	A	28	21	36	32	2 1/8	22	17	29	26	2 5/8	19	15	24	22	3 1/8	19	15	22	17	3 1/8 UNC
(#16)	B	36	28	47	41		29	22	38	33		24	19	32	28		24	19	29	22	4 3/8 EPOXY
#6	A	37	29	49	43	2 1/4	31	24	40	35	3 3/4	22	17	29	26	3 3/4	22	17	29	26	3 3/4
(#19)	B	48	37	63	56		40	31	52	46		29	22	38	34		29	22	38	34	
#7	A	60	46	78	69	2 3/8	50	38	65	57	2 7/8	37	28	48	43	3 7/8	33	25	43	38	4 3/8
(#22)	B	78	60	102	90		64	50	84	74		48	37	62	55		42	33	55	49	
#8	A	74	57	97	86	2 1/2	62	48	81	72	3	47	36	61	54	4	37	29	49	43	5
(#25)	B	96	74	126	111		80	62	105	93		60	47	79	70		48	37	63	56	
#9	A	90	69	117	104	2 5/8	76	58	99	87	3 1/8	57	44	75	66	4 1/8	46	36	60	53	5 1/8
(#29)	B	117	90	153	135		98	76	128	113		74	57	97	86		60	46	78	69	
#10	A	108	83	141	125	2 7/8	92	70	120	106	3 3/8	70	54	92	81	4 1/4	57	44	74	66	5 1/4
(#32)	B	140	108	183	162		119	92	155	137		91	70	119	105		74	57	97	85	
#11	A	127	98	166	146	3	108	83	141	125	3 1/2	84	65	110	97	4 1/2	67	53	89	79	5 1/2
(#36)	B	165	127	215	190		141	108	184	162		109	84	142	125		89	68	116	102	

f'_c = 5000 PSI		TABLE 3 (f'_c = 5000 PSI) - TENSION DEVELOPMENT AND LAP SPLICE LENGTHS FOR BARS IN WALLS AND SLABS (IN)																				
SEE GENERAL SHEET NOTES FOR FURTHER INFORMATION		MINIMUM CONCRETE COVER = 0.75"					MINIMUM CONCRETE COVER = 1.00"					MINIMUM CONCRETE COVER = 1.50"					MINIMUM CONCRETE COVER = 2.00"				
		12" CASTING POSITION	OTHER BARS	12" CASTING POSITION	OTHER BARS	MINIMUM CENTER TO CENTER SPACING	12" CASTING POSITION	OTHER BARS	12" CASTING POSITION	OTHER BARS	MINIMUM CENTER TO CENTER SPACING	12" CASTING POSITION	OTHER BARS	12" CASTING POSITION	OTHER BARS	MINIMUM CENTER TO CENTER SPACING	12" CASTING POSITION	OTHER BARS	12" CASTING POSITION	OTHER BARS	MINIMUM CENTER TO CENTER SPACING
		UNCOATED		EPOXY COATED			UNCOATED		EPOXY COATED			UNCOATED		EPOXY COATED			UNCOATED		EPOXY COATED		
#3	A	12	12	13	12	1 7/8	12	12	13	12	1 7/8	12	12	12	12	1 7/8 UNC	12	12	12	12	1 7/8 UNC
(#10)	B	16	16	17	16		16	16	17	16		16	16	16	16	2 5/8 EPOXY	16	16	16	16	2 5/8 EPOXY
#4	A	17	13	22	20	2	14	12	18	16	2.5	14	12	16	13	2 1/2 UNC	14	12	16	13	2 1/2 UNC
(#13)	B	22	17	29	25		18	16	23	20		18	16	21	16	3 1/2 EPOXY	18	16	21	16	3 1/2 EPOXY
#5	A	25	19	32	28	2 1/8	20	16	26	23	2 5/8	17	13	22	19	3 1/8	17	13	20	16	3 1/8 UNC
(#16)	B	32	25	42	37		26	20	34	30		22	17	29	25		22	17	26	20	4 3/8 EPOXY
#6	A	33	26	44	39	2 1/4	27	21	36	32	2 3/4	20	16	26	23	3 3/4	20	16	26	23	3 3/4
(#19)	B	43	33	57	50		36	27	46	41		26	20	34	30		26	20	34	30	
#7	A	54	41	70	62	2 3/8	44	34	58	51	2 7/8	33	26	43	38	3 7/8	29	23	38	34	4 3/8
(#22)	B	70	54	91	80		58	44	75	67		43	33	56	49		38	29	50	44	
#8	A	66	51	87	77	2 1/2	56	43	72	64	3	42	32	54	48	4	33	26	44	38	5
(#25)	B	86	67	113	100		72	56	94	83		54	42	71	62		43	33	57	50	
#9	A	80	62	105	93	2 5/8	68	52	88	78	3 1/8	51	40	67	59	4 1/8	41	32	54	48	5 1/8
(#29)	B	105	81	136	120		88	68	114	101		67	51	87	77		54	41	70	62	
#10	A	97	75	126	111	2 7/8	82	63	107	95	3 3/8	63	48	82	72	4 1/4	51	39	67	59	5 1/4
(#32)	B	126	97	164	145		106	82	139	123		82	63	107	94		66	51	86	76	
#11	A	113	87	148	131	3	97	75	126	112	3 1/2	75	58	98	86	4 1/2	61	47	80	71	5 1/2
(#36)	B	147	113	192	170		126	97	164	145		97	75	127	112		79	61	104	91	

TABLE 4 - TENSION DEVELOPMENT LENGTHS OF STANDARD HOOKS AND ASTM A970 TERMINATORS														
SEE GENERAL NOTES	LENGTHS (IN) PER CONCRETE STRENGTH													
	f'_c = 4000 PSI		f'_c = 5000 PSI		f'_c = 6000 PSI		f'_c = 7000 PSI		f'_c = 8000 PSI		f'_c = 9000 PSI		f'_c = 10000 PSI	
BAR SIZE	UNCOATED	EPOXY	UNCOATED	EPOXY	UNCOATED	EPOXY	UNCOATED	EPOXY	UNCOATED	EPOXY	UNCOATED	EPOXY	UNCOATED	EPOXY
#3 (#10)	7	9	7	8	6	7	6	7	6	6	6	6	6	6
#4 (#13)	10	12	9	11	8	10	7	9	7	8	7	8	6	7
#5 (#16)	12	15	11	13	10	12	9	11	9	10	8	10	8	9
#6 (#19)	15	17	13	16	12	14	11	13	10	12	10	12	9	11
#7 (#22)	17	20	15	18	14	17	13	15	12	14	11	14	11	13
#8 (#25)	19	23	17	21	16	19	15	18	14	16	13	15	12	15
#9 (#29)	22	26	19	23	18	21	16	20	15	18	15	17	14	17
#10 (#32)	24	29	22	26	20	24	19	22	17	21	16	20	16	19
#11 (#36)	27	32	24	29	22	27	21	25	19	23	18	22	17	21
#14 (#43)	32	39	29	35	27	32	25	30	23	28	22	26	21	25
#18 (#57)	43	52	39	46	35	42	33	39	31	37	29	35	27	33

TABLE 5 - COMPRESSION DEVELOPMENT AND LAP SPLICE LENGTHS FOR UNCOATED AND EXPOXY-COATED BARS								
SEE GENERAL NOTES	LENGTHS (IN) PER CONCRETE STRENGTH							
	f'_c = 4000 PSI	f'_c = 5000 PSI	f'_c = 6000 PSI	f'_c = 7000 PSI	f'_c = 8000 PSI	f'_c = 9000 PSI	f'_c = 10000 PSI	LAP SPLICE
#3 (#10)	8	8	8	8	8	8	8	12
#4 (#13)	10	9	9	9	9	9	9	15
#5 (#16)	12	12	12	12	12	12	12	19
#6 (#19)	15	14	14	14	14	14	14	23
#7 (#22)	17	16	16	16	16	16	16	27
#8 (#25)	19	18	18	18	18	18	18	30
#9 (#29)	22	21	21	21	21	21	21	34
#10 (#32)	24	23	23	23	23	23	23	38
#11 (#36)	27	26	26	26	26	26	26	43
#14 (#43)	32	31	31	31	31	31	31	N/A
#18 (#57)	43	41	41	41	41	41	41	N/A

TABLE 6 - TENSION DEVELOPMENT LENGTHS FOR PLAIN WELDED WIRE FABRIC									
WIRE	WIRE SPACING (in)	DEVELOPMENT LENGTH (in)				LAP SPLICE (in)			
		CROSS WIRE SPACING (in)				CROSS WIRE SPACING (in)			
		4	6	8	12	4	6	8	12
W0.5 TO W2	4	6	8	10	14	8	8	10	14
	6	6	8	10	14	6	8	10	14
	8	6	8	10	14	6	8	10	14
	12	6	8	10	14	6	8	10	14
W2.5 TO W3.5	4	9	9	10	14	14	14	14	14
	6	6	8	10	14	9	9	10	14
	8	6	8	10	14	7	8	10	14
	12	6	8	10	14	6	8	10	14
W4 TO W4.5	4	12	12	12	14	18	18	18	18
	6	8	8	10	14	12	12	12	14
	8	6	8	10	14	9	9	10	14
	12	6	8	10	14	6	8	10	14
W5 TO W5.5	4	15	15	15	15	22	22	22	22
	6	10	10	10	14	15	15	15	15
	8	8	8	10	14	11	11	11	14
	12	6	8	10	14	8	8	10	14
W6	4	16	16	16	16	24	24	24	24
	6	11	12	11	14	16	16	16	16
	8	8	8	10	14	12	12	12	14
	12	6	8	10	14	8	8	10	14

SHEET NOTES

1. REINFORCING BARS CONFORMING TO ASTM A615 OR A706 AND NORMAL WEIGHT CONCRETE.
2. TABULATED VALUES FOR BEAMS AND COLUMNS ARE BASED ON TRANSVERSE REINFORCEMENT MEETING MINIMUM CODE REQUIREMENTS.
3. CASES 1, 2, AND 3 ARE DEFINED AS FOLLOWS:
   A. CASE 1: COVER AT LEAST 2.0d/b AND C-C SPACING AT LEAST 5.0d/b
   B. CASE 2: COVER AT LEAST 1.0d/b AND C-C SPACING AT LEAST 3.0d/b
   C. CASE 3: COVER LESS THAN 1.0d/b AND/OR C-C SPACING LESS THAN 3.0d/b BUT 2.0d/b MIN
4. LAP SPLICE LENGTHS ARE MULTIPLES OF TENSION DEVELOPMENT LENGTHS; CLASS A = 1.0 l/d AND CLASS B = 1.3 l/d
5. LAP SPLICES OF #14 AND #18 BARS ARE NOT ALLOWED. TABULATED VALUES ARE TENSION DEVELOPMENT LENGTHS.
6. TOP BARS ARE HORIZONTAL BARS WITH MORE THAN 12" OF CONCRETE CAST BELOW.
7. FOR LIGHTWEIGHT AGGREGATE CONCRETE MULTIPLY TABULATED VALUES BY 1.3.
8. WHEN LAPPING A SMALLER BAR WITH A LARGER DIAMETER BAR USE THE LAP LENGTH FOR THE SMALLER DIAMETER BAR OR TENSION DEVELOPMENT LENGTH OF LARGER BAR, WHICHEVER IS GREATER.
9. ( ) INDICATES METRIC BAR SIZE (mm).
10. EPOXY COATING OF BARS LARGER THAN #6 IS NOT ALLOWED.
11. TABULATED VALUES APPLY ONLY TO INDIVIDUAL BARS IN COLUMNS AND NOT TO BUNDLED BARS. BUNDLED BARS ARE GROUPS OF PARALLEL REINFORCING BARS, NO MORE THAN FOUR, BUNDLED IN CONTACT TO ACT AS A UNIT. LAP SPLICES ARE NOT ALLOWED FOR BUNDLED BARS AND MECHANICAL SPLICES MUST BE USED. SEE COLUMN SCHEDULE SHEET FOR ADDITIONAL REQUIREMENTS.
12. TABULATED VALUES DO NOT APPLY FOR USE IN HIGH SEISMIC SPECIAL MOMENT FRAMES AND SHEAR WALLS. SEE SPECIAL MOMENT FRAME AND / OR SHEAR WALL DETAILS FOR DEVELOPMENT LENGTH AND SPLICE REQUIREMENTS.

UNCW
UNIVERSITY of NORTH CAROLINA WILMINGTON
601 S COLLEGE ROAD
WILMINGTON, NORTH CAROLINA 28403

PARKING DECK II AND SURFACE PARKING (DESIGN-BUILD)
SOUTH CAMPUS - 4965 RIEGEL ROAD

SCO ID NUMBER: 18-19226-01A
CODE: 441828
ITEM: 301

CONTRACTOR
Balfour Beatty Construction

DESIGNER
CLARKNEXSEN
1523 ELIZABETH AVENUE, SUITE 300
CHARLOTTE, NORTH CAROLINA 28204
704.377.8800
CLARK NEXSEN LICENSE NUMBER: C-1028

WALKER CONSULTANTS
13860 Ballantyne Corporate Place
Suite 140
Charlotte, NC 28277
T: 704.247.6230
www.walkerconsultants.com
NC License No. F-0518

McKIM&CREED
CIVIL ENGINEER
243 NORTH FRONT STREET
WILMINGTON, NORTH CAROLINA
28401
910.343.1048

PROFESSIONAL SEAL

NOT FOR CONSTRUCTION
NORTH CAROLINA PROFESSIONAL SEAL 028007 ENGINEER JOEY D. ROWLAND

SUBMITTAL
03-29-2019
75% CONSTRUCTION DOCUMENTS

REVISIONS

KEY PLAN

SHEET
LAP SPLICE SCHEDULES

S-650

DESIGN: Designer
DRAWN: Author
REVIEW: Checker

CN PROJECT NUMBER

4/1/2019 7:51:58 AM
C:\Revit Projects\UNC Wilmington Deck II_r17_ory.grantham.rvt