MONTEITH

PROJECT GRACE
THE NHC DOWNTOWN LIBRARY AND CAPE FEAR MUSEUM

Addendum No. 2

Date Issued: June 22, 2023

This addendum includes:

- RFI Responses for all remaining questions (6,14, 26-101)

- Revisions to Specs and Drawings - See Architect Addendum 2 (page 2 of this document)

- Bid date: Bids will be received until 3:00 PM Thursday June 29, 2923 by email to: Brian Stamp at bstamp@monteithco.com

- Flooring - The following alternate pricing is required:

  • Provide credit to delete all flooring finishes in the following rooms M115,M201, M206, M207, M307, M309, M310, M311.

For questions, please contact Brian Stamp, bstamp@monteithco.com

ADDENDUM NO. 2

Date of Addendum: June 22, 2023

Project Name: Project Grace

PROJECT INFORMATION

A. Owner: New Hanover County.

B. Architect: LS3P

C. Architect Project Number: 7701-177600

NOTICE TO BIDDERS

A. This Addendum is issued to all Bidders pursuant to the Instructions to Bidders and Conditions of the Contract. This Addendum serves to clarify, revise, and supersede information in the Project Manual, Drawings, and previously issued Addenda. Portions of the Addendum affecting the Contract Documents will be incorporated into the Contract by enumeration of the Addendum in the Owner/Contractor Agreement.

B. The Bidder shall acknowledge receipt of this Addendum in the appropriate space on the Bid Form.

ATTACHMENTS

A. This Addendum includes the following attached Documents and Specification Sections:

1. SECTION 099600 – HIGH PERFORMANCE COATINGS, dated 22 June 2023, (new).
2. SECTION 102239 – FOLDING PANEL PARTITIONS, dated 22 June 2023, (reissued).
3. SECTION 105626 – MOBILE STORAGE SHELVING, dated 22 June 2023, (reissued)
4. SECTION 221413 – FACILITY STORM DRAINAGE PIPING, dated 22 June 2023, (reissued).
5. SECTION 230713 – DUCT INSULATION, dated 22 June 2023, (reissued).
6. SECTION 230719 – HVAC PIPING INSULATION, dated 22 June 2023, (reissued).
7. SECTION 230923 – DIRECT DIGITAL CONTROL (DDC) SYSTEM FOR HVAC, dated 22 June 2023, (reissued).
8. SECTION 232123 – HYDRONIC PUMPS, dated 22 June 2023, (reissued).
9. SECTION 235216 – CONDENSING BOILERS, dated 22 June 2023, (reissued).
10. SECTION 238413.29 – SELF-CONTAINED STEAM HUMIDIFIERS, dated 22 June 2023, (reissued).
11. SECTION 263600 – TRANSFER SWITCHES, dated 22 June 2023, (reissued).
12. SECTION 271116 – COMMUNICATIONS RACKS, FRAMES, AND ENCLOSURES, dated 22 June 2023, (reissued).
13. SECTION 271323 – COMMUNICATIONS OPTICAL FIBER BACKBONE CABLING, dated 22 June 2023, (reissued).

14. SECTION 271513 – COMMUNICATIONS COPPER HORIZONTAL CABLING, dated 22 June 2023, (reissued).
15. SECTION 284621.11 – ADDRESSABLE FIRE-ALARM SYSTEMS, dated 22 June 2023, (reissued).

B. This Addendum includes the following attached Sheets:

1. Structural Sheet S-100 – COVER SHEET, dated June 22, 2023, (reissued).
2. Structural Sheet S-101 – GENERAL NOTES, dated June 22, 2023, (reissued).
3. Structural Sheet S-103 – TYPICAL DETAILS, dated June 22, 2023, (reissued).
4. Structural Sheet S-200A – FOUNDATION PLAN-AREA A, dated June 22, 2023, (reissued).
5. Structural Sheet S-200B – FOUNDATION PLAN-AREA B, dated June 22, 2023, (reissued).
6. Structural Sheet S-201A – SLAB ON GRADE PLAN – AREA A, dated June 22, 2023, (reissued).
7. Structural Sheet S-201B – SLAB ON GRADE PLAN – AREA B, dated June 22, 2023, (reissued).
8. Structural Sheet S-202 EOS – SECOND FLOOR EDGE OF SLAB PLAN, dated June 22, 2023, (reissued).
9. Structural Sheet S-202B – SECOND FLOOR FRAMING PLAN-AREA B, dated June 22, 2023, (reissued).
10. Structural Sheet S-203A – THIRD FLOOR FRAMING PLAN-AREA A, dated June 22, 2023, (reissued).
11. Structural Sheet S-203B – THIRD FLOOR FRAMING PLAN-AREA B, dated June 22, 2023, (reissued).
12. Structural Sheet S-205 – LOW ROOF FRAMING PLAN, dated June 22, 2023, (reissued).
13. Structural Sheet S-206 – HIGH ROOF FRAMING PLAN, dated June 22, 2023, (reissued).
14. Structural Sheet S-206 PT – ROOF PT SLAB PLAN, dated June 22, 2023, (reissued).
15. Structural Sheet S-207 – DESIGN LIVE LOAD PLANS AND EXHIBIT ANCHORAGE DETAILS, dated June 22, 2023, (reissued).
16. Structural Sheet S-208 – MONUMENTAL STAIR PLANS, SECTIONS & DETAILS, dated June 22, 2023, (reissued).
17. Structural Sheet S-211 – STAIR TOWER FRAMING PLANS, dated June 22, 2023, (reissued).
18. Structural Sheet S-301 – AUGER CAST PILE DETAILS, dated June 22, 2023, (reissued).
19. Structural Sheet S-302 – GRAVITY PILE CAP PLANS, dated June 22, 2023, (reissued).
20. Structural Sheet S-305 – FOUNDATION SECTIONS & DETAILS, dated June 22, 2023, (reissued).
21. Structural Sheet S-402 – FRAMING SECTIONS & DETAILS, dated June 22, 2023, (reissued).
22. Structural Sheet S-403 – FRAMING SECTIONS & DETAILS, dated June 22, 2023, (reissued).
23. Structural Sheet S-404 – FRAMING SECTIONS & DETAILS, dated June 22, 2023, (reissued).
24. Structural Sheet S-405 – FRAMING ELEVATIONS, dated June 8, 2023, (reissued).
25. Structural Sheet S-501 – CONCRETE SHEAR WALLS, dated June 22, 2023, (reissued).

26. Architectural Sheet A-511 – EXTERIOR WALL SECTION DETAILS, dated June 22, 2023, (reissued).
27. Architectural Sheet A-512 – EXTERIOR WALL SECTION DETAILS, dated June 22, 2023, (reissued).
28. Architectural Sheet A-513 – EXTERIOR WALL SECTION DETAILS, dated June 22, 2023, (reissued).
29. Architectural Sheet A-514 – EXTERIOR WALL SECTION DETAILS, dated June 22, 2023, (reissued).
30. Architectural Sheet A-601 – DOOR SCHEDULES, dated June 22, 2023, (reissued).
31. Electrical Sheet E-201A – ELECTRICAL LIGHTING LEVEL 1 – AREA A, dated June 22, 2023, (reissued).
32. Electrical Sheet E-201B – ELECTRICAL LIGHTING LEVEL 1 – AREA B, dated June 22, 2023, (reissued).
33. Electrical Sheet E-202A – ELECTRICAL LIGHTING LEVEL 2 – AREA A, dated June 22, 2023, (reissued).
34. Electrical Sheet E-203A – ELECTRICAL LIGHTING LEVEL 3 – AREA A, dated June 22, 2023, (reissued).
35. Electrical Sheet E-203B – ELECTRICAL LIGHTING LEVEL 3 – AREA B, dated June 22, 2023, (reissued).
36. Electrical Sheet E-401 – ELECTRICAL RISER DIAGRAM – LEGEND & SCHEDULES, dated June 22, 2023, (reissued).
37. Electrical Sheet E-402 – ELECTRICAL RISER DIAGRAM, dated June 22, 2023, (reissued).
38. Electrical Sheet E-501 – ELECTRICAL SCHEDULES – LUMINAIRE, dated June 22, 2023, (reissued).
39. Electrical Sheet E-511 – ELECTRICAL SCHEDULES – MECHANICAL EQUIPMENT, dated June 22, 2023, (reissued).
40. Electrical Sheet E-521 – ELECTRICAL SCHEDULES – PANELBOARD AND EQUIPMENT, dated June 22, 2023, (reissued).

REVISIONS TO DIVISION 01 GENERAL REQUIREMENTS

A. SECTION 011000 - SUMMARY, (not reissued). Make the following revisions:

1. Paragraph 1.2.B: Revise to read as follows:

"B. Owner: **New Hanover County, 230 Government Center Drive, Wilmington, NC 28403**.

1. Owner's Representative: Ms. Sara Warmuth."

REVISIONS TO DIVISIONS 02 - 49 SPECIFICATION SECTIONS

A. SECTION 074213.13 – FORMED METAL WALL PANELS, (not reissued). Make the following revisions:

1. Paragraph 2.4.B.3: Add the following under Paragraph 3.:

"**a. Perforations: 1/4-inch; 1/2-inch spacing; 23% opening**."

B. SECTION 084113 – ALUMINUM-FRAMED ENTRANCES AND STOREFRONTS, (not reissued). Make the following revisions:

1. Paragraph 2.3.B.2.: Revise to read as follows:

"2. Interior Vestibule Framing Construction: **Thermal**."

C. SECTION 084423 – STRUCTURAL-SEALANT-GLAZED CURTAIN WALLS, (not reissued). Make the following revisions:

1. Paragraph 2.3.B.1: Revise to read as follows.:

"3. Glazing System: "Retained with structural sealant on **two** sides."

D. Add SECTION 099600 – HIGH PERFORMANCE COATINGS, included in the Attachments.

E. Replace SECTION 102239 – FOLDING PANEL PARTITIONS with revised SECTION 102239, included in the Attachments.

F. Replace SECTION 105626 – MOBILE STORAGE SHELVING with revised SECTION 105626, included in the Attachments.

G. Replace SECTION 221413 – FACILITY STORM DRAINAGE PIPING with revised SECTION 221413, included in the Attachments.

H. Replace SECTION 230713 – DUCT INSULATION with revised SECTION 230713, included in the Attachments.

I. Replace SECTION 230719 – HVAC PIPING INSULATION with revise SECTION 230719, included in the Attachments.

J. Replace SECTION 230923 – DIRECT DIGITAL CONTROL (DDC) SYSTEM FOR HVAC with revised SECTION 230923, included in the Attachments.

K. Replace SECTION 232123 – HYDRONIC PUMPS with revised SECTION 232123, included in the Attachments.

L. Replace SECTION 235216 – CONDENSING BOILERS with revised SECTION 235216, included in the Attachments.

M. Replace SECTION 238413.29 – SELF-CONTAINED STEAM HUMIDIFIERS with revised SECTION 238413.29, included in the Attachments.

N. Replace SECTION 263600 – TRANSFER SWITCHES with revised SECTION 263600, included in the Attachments.

O. Replace SECTION 271116 – COMMUNICATIONS RACKS, FRAMES, AND ENCLOSURES with revised SECTION 271116, included in the Attachments.

P. Replace SECTION 271323 – COMMUNICATIONS OPTICAL FIBER BACKBONE CABLING with revised SECTION 271323, included in the Attachments.

Q. Replace SECTION 271513 – COMMUNICATIONS COPPER HORIZONTAL CABLING with revised SECTION 271513, included in the Attachments.

R. Replace SECTION 284621.11 – ADDRESSABLE FIRE-ALARM SYSTEMS with revised SECTION 284621.11, included in the Attachments.

ADDITIONAL ACCEPTABLE MANUFACTURERS

A. The following is a list of manufacturers that have been approved for this Project, providing they can comply with the Specifications and are of equal or greater quality, and function and perform like the specified products. Inclusion to the list of acceptable manufacturers does not eliminate the necessity to comply with specifications. Non-compliant manufacturers and products will be rejected regardless of manufacturer being listed.

SECTION 072100 – THERMAL INSULATION:

Mineral Wool Blanket Insulation: Johns Manville
Mineral Wool Board Insulation: Johns Manville

SECTION 074213.23 – METAL COMPOSITE MATERIAL WALL PANELS: Alfrex

SECTION 102239 – FOLDING PANEL PARTITIONS: Moderco.

REVISIONS TO DRAWING SHEETS

A. Replace SHEET S-100 – COVER SHEET with revised SHEET S-100, included in the Attachments.

B. Replace SHEET S-101 – GENERAL NOTES with revised SHEET S-101, included in the Attachments.

C. Replace SHEET S-103 – TYPICAL DETAILS with revised SHEET S-103, included in the Attachments.

D. Replace SHEET S-200A – FOUNDATION PLAN-AREA A with revised SHEET S-200A, included in the Attachments.

E. Replace SHEET S-200B – FOUNDATION PLAN-AREA B with revised SHEET S-200B, included in the Attachments.

F. Replace SHEET S-201A – SLAB ON GRADE PLAN-AREA A with revised SHEET S201A, included in the Attachments.

G. Replace SHEET S-201B – SLAB ON GRADE PLAN-AREA B with revised SHEET S-201B, included in the Attachments.

H. Replace SHEET S-202 EOS – SECOND FLOOR EDGE OF SLAB PLAN with revised SHEET S-202 EOS, included in the Attachments.

I. Replace SHEET S-202B – SECOND FLOOR FRAMING PLAN-AREA B with revised SHEET S-202B, included in the Attachments.

J. Replace SHEET S-203A – THIRD FLOOR FRAMING PLAN-AREA A with revised SHEET S-203A, included in the Attachments.

K. Replace SHEET S-203B- THIRD FLOOR FRAMING PLAN-AREA B with revised SHEET S-203B, included in the Attachments.

L. Replace SHEET S-205 – LOW ROOF FRAMING PLAN with revised SHEET S-205, included in the Attachments.

M. Replace SHEET S-206 – HIGH ROOF FRAMING PLAN with revised SHEET S-206, included in the Attachments.

N. Replace SHEET S-206PT – ROOF PT SLAB PLAN with revised SHEET S-206PT, included in the Attachments.

O. Replace SHEET S-207 – DESIGN LIVE LOAD PLANS AND EXHABIT ANCHORAGE DETAILS with revised SHEET S-207, included in the Attachments.

P. Replace SHEET S-208 – MONUMENTAL STAIR PLANS, SECTIONS & DETAILS with revised SHEET S-208, included in the Attachments.

Q. Replace SHEET S-211 – STAIR TOWER FRAMING PLANS with revised SHEET S-211, included in the Attachments.

R. Replace SHEET S-302 – GRAVITY PILE CAP PLANS with revised SHEET S-302, included in the Attachments.

S. Replace SHEET S-305 – FOUNDATION SECTIONS & DETAILS with revised SHEET S-305, included in the Attachments.

T. Replace SHEET S-402 – FRAMING SECTIONS & DETAILS with revised SHEET S-402, included in the Attachments.

U. Replace SHEET S-403 – FRAMING SECTIONS &DETAILS with revised SHEET S-403, included in the Attachments.

V. Replace SHEET S-404 – FRAMING SECTIONS & DETAILS with revised SHEET S-404, included in the Attachments.

W. Replace SHEET S-405 FRAMING ELEVATIONS with revised SHEET S-405, included in the Attachments.

X. Replace SHEET S-501 – CONCRETE SHEAR WALLS with revised SHEET S-501, included in the Attachments.

Y. Replace SHEET A-511 – EXTERIOR WALL SECTION DETAILS with revised SHEET A-511, included in the Attachments.

Z. Replace SHEET A-512 – EXTERIOR WALL SECTION DETAILS with revised SHEET A-512, included in the Attachments.

AA. Replace SHEET A-513 – EXTERIOR WALL SECTION DETAILS with revised SHEET A-513, included in the Attachments.

BB. Replace SHEET A-514 – EXTERIOR WALL SECTION DETAILS with revised SHEET A-514, included in the Attachments.

CC. Replace SHEET A-601 – DOOR SCHEDULES with revised SHEET A-601, included in the Attachments.

DD. Replace SHEET E-201A – ELECTRICAL LIGHTING LEVEL 1 – AREA A with revised SHEET E-201A, included in the Attachments.

EE. Electrical Sheet E-201B – ELECTRICAL LIGHTING LEVEL 1 – AREA B with revised SHEET.E-201B, included in the Attachments.

FF. Electrical Sheet E-202A – ELECTRICAL LIGHTING LEVEL 2 – AREA A with revised SHEET E-202A, included in the Attachments.

GG. Electrical Sheet E-203A – ELECTRICAL LIGHTING LEVEL 3 – AREA A with revised SHEET E-203A, included in the Attachments.

HH. Replace SHEET E-203B – ELECTRICAL LIGHTING LEVEL 3 – AREA B with revised SHEET E-203B, included in the Attachments.

II. Replace SHEET E-401 – ELECTRICAL RISER DIAGRAM – LEGEND & SCHEDULES with revised SHEET E-401, included in the Attachments.

JJ. Replace SHEET E-402 – ELECTRICAL RISER DIAGRAM with revised SHEET E-402, included in the Attachments.

KK. Replace SHEET E-501 – ELECTRICAL SCHEDULES – LUMINAIRE with revised SHEET E-501, included in the Attachments.

LL. Replace SHEET E-511 – ELECTRICAL SCHEDULES – MECHANICAL EQUIPMENT with revised SHEET E-511, included in the Attachments.

MM. Replace SHEET E-521 – ELECTRICAL SCHEDULES – PANELBOARD AND EQUIPMENT with revised SHEET E-521, included in the Attachments.

END OF ADDENDUM NO. 2

SECTION 099600 - HIGH-PERFORMANCE COATINGS

PART 1 - GENERAL

1.1 SUMMARY

A. Section includes surface preparation and the application of high-performance coating systems on the following substrates:

1. Exterior Substrates:

a. Concrete masonry units (CMUs).
b. Steel.
c. Galvanized metal.

1.2 ACTION SUBMITTALS

A. Product Data: For each type of product. Include preparation requirements and application instructions.

1. Include printout of current "MPI Approved Products List" for each product category specified, with the proposed product highlighted.
2. Indicate VOC content.

B. Samples for Verification: For each type of coating system and each color and gloss of topcoat indicated.

1. Submit Samples on rigid backing, 8 inches square.
2. Apply coats on Samples in steps to show each coat required for system.
3. Label each coat of each Sample.
4. Label each Sample for location and application area.

C. Product List: Cross-reference to coating system and locations of application areas. Use same designations indicated on Drawings and in schedules. Include color designations.

1.3 QUALITY ASSURANCE

A. Mockups: Apply mockups of each coating system indicated to verify preliminary selections made under Sample submittals and to demonstrate aesthetic effects and set quality standards for materials and execution.

1. Architect will select one surface to represent surfaces and conditions for application of each coating system.

a. Wall and Ceiling Surfaces: Provide samples of at least 100 sq. ft..
b. Other Items: Architect will designate items or areas required.

2. Final approval of color selections will be based on mockups.

a. If preliminary color selections are not approved, apply additional mockups of additional colors selected by Architect at no added cost to Owner.

3. Approval of mockups does not constitute approval of deviations from the Contract Documents contained in mockups unless Architect specifically approves such deviations in writing.

4. Subject to compliance with requirements, approved mockups may become part of the completed Work if undisturbed at time of Substantial Completion.

1.4 DELIVERY, STORAGE, AND HANDLING

A. Store materials not in use in tightly covered containers in well-ventilated areas with ambient temperatures continuously maintained at not less than 45 deg F.

1. Maintain containers in clean condition, free of foreign materials and residue.
2. Remove rags and waste from storage areas daily.

1.5 FIELD CONDITIONS

A. Apply coatings only when temperature of surfaces to be coated and ambient air temperatures are between 50 and 95 deg F.

B. Do not apply coatings when relative humidity exceeds 85 percent; at temperatures less than 5 deg F above the dew point; or to damp or wet surfaces.

C. Do not apply exterior coatings in snow, rain, fog, or mist.

PART 2 - PRODUCTS

2.1 MANUFACTURERS

A. Manufacturers: Subject to compliance with requirements, available manufacturers offering products that may be incorporated into the Work include, but not limited to, the following:

1. Benjamin Moore & Co.
2. PPG Architectural Finishes, Incorporated.
3. Sherwin-Williams.

B. Products: Subject to compliance with requirements, provide one of the products listed in the Exterior High-Performance Coating Schedule or Interior High-Performance Coating Schedule for the coating category indicated.

2.2 HIGH-PERFORMANCE COATINGS, GENERAL

A. MPI Standards: Products shall comply with MPI standards indicated and shall be listed in its "MPI Approved Products Lists."

B. Material Compatibility:

1. Materials for use within each paint system shall be compatible with one another and substrates indicated, under conditions of service and application as demonstrated by manufacturer, based on testing and field experience.
2. For each coat in a paint system, products shall be recommended in writing by topcoat manufacturers for use in paint system and on substrate indicated.
3. Products shall be of same manufacturer for each coat in a coating system.

C. Colors: As selected by Architect from manufacturer's full range.

2.3 SOURCE QUALITY CONTROL

A. Testing of Coating Materials: Owner reserves the right to invoke the following procedure:

1. Owner will engage the services of a qualified testing agency to sample coating materials. Contractor will be notified in advance and may be present when samples are taken. If coating materials have already been delivered to Project site, samples may be taken at Project site. Samples will be identified, sealed, and certified by testing agency.
2. Testing agency will perform tests for compliance with product requirements.
3. Owner may direct Contractor to stop applying coatings if test results show materials being used do not comply with product requirements. Contractor shall remove noncomplying coating materials from Project site, pay for testing, and recoat surfaces coated with rejected materials. Contractor will be required to remove rejected materials from previously coated surfaces if, on recoating with complying materials, the two coatings are incompatible.

PART 3 - EXECUTION

3.1 EXAMINATION

A. Examine substrates and conditions, with Applicator present, for compliance with requirements for maximum moisture content and other conditions affecting performance of the Work.

B. Maximum Moisture Content of Substrates: When measured with an electronic moisture meter as follows:

1. Masonry (Clay and CMUs): 12 percent.

C. Verify suitability of substrates, including surface conditions and compatibility, with existing finishes and primers.

D. Proceed with coating application only after unsatisfactory conditions have been corrected.

1. Application of coating indicates acceptance of surfaces and conditions.

3.2 PREPARATION

A. Comply with manufacturer's written instructions and recommendations in "MPI Architectural Painting Specification Manual" applicable to substrates and coating systems indicated.

B. Remove hardware, covers, plates, and similar items already in place that are removable and are not to be painted. If removal is impractical or impossible because of size or weight of item, provide surface-applied protection before surface preparation and painting.

1. After completing painting operations, use workers skilled in the trades involved to reinstall items that were removed. Remove surface-applied protection if any.

C. Clean substrates of substances that could impair bond of coatings, including dust, dirt, oil, grease, and incompatible paints and encapsulants.

1. Remove incompatible primers and reprime substrate with compatible primers or apply tie coat as required to produce coating systems indicated.

D. Masonry Substrates: Remove efflorescence and chalk. Do not coat surfaces if moisture content, alkalinity of surfaces, or alkalinity of mortar joints exceeds that permitted in manufacturer's written instructions.

E. Steel Substrates: Remove rust, loose mill scale, and shop primer if any. Clean using methods recommended in writing by paint manufacturer.

F. Shop-Primed Steel Substrates: Clean field welds, bolted connections, and areas where shop paint is abraded. Paint exposed areas with the same material as used for shop priming to comply with SSPC-PA 1 for touching up shop-primed surfaces.

G. Galvanized-Metal Substrates: Remove grease and oil residue from galvanized sheet metal by mechanical methods to produce clean, lightly etched surfaces that promote adhesion of subsequently applied coatings.

3.3 APPLICATION

A. Apply high-performance coatings according to manufacturer's written instructions and recommendations in "MPI Architectural Painting Specification Manual."

1. Use applicators and techniques suited for coating and substrate indicated.
2. Coat surfaces behind movable equipment and furniture same as similar exposed surfaces. Before final installation, coat surfaces behind permanently fixed equipment or furniture with prime coat only.
3. Coat backsides of access panels, removable or hinged covers, and similar hinged items to match exposed surfaces.
4. Do not apply coatings over labels of independent testing agencies or equipment name, identification, performance rating, or nomenclature plates.

B. Tint each undercoat a lighter shade to facilitate identification of each coat if multiple coats of the same material are to be applied. Tint undercoats to match color of finish coat, but provide sufficient difference in shade of undercoats to distinguish each separate coat.

C. If undercoats or other conditions show through final coat, apply additional coats until cured film has a uniform coating finish, color, and appearance.

D. Apply coatings to produce surface films without cloudiness, spotting, holidays, laps, brush marks, runs, sags, ropiness, or other surface imperfections. Produce sharp glass lines and color breaks.

3.4 FIELD QUALITY CONTROL

A. Dry Film Thickness Testing: Owner may engage the services of a qualified testing and inspecting agency to inspect and test coatings for dry film thickness.

1. Contractor shall touch up and restore coated surfaces damaged by testing.
2. If test results show that dry film thickness of applied coating does not comply with coating manufacturer's written recommendations, Contractor shall pay for testing and apply additional coats as needed to provide dry film thickness that complies with coating manufacturer's written recommendations.

3.5 CLEANING AND PROTECTION

A. At end of each workday, remove rubbish, empty cans, rags, and other discarded materials from Project site.

B. After completing coating application, clean spattered surfaces. Remove spattered coatings by washing, scraping, or other methods. Do not scratch or damage adjacent finished surfaces.

C. Protect work of other trades against damage from coating operation. Correct damage to work of other trades by cleaning, repairing, replacing, and recoating, as approved by Architect, and leave in an undamaged condition.

D. At completion of construction activities of other trades, touch up and restore damaged or defaced coated surfaces.

3.6 EXTERIOR HIGH-PERFORMANCE COATING SCHEDULE

A. CMU Substrates:

1. Pigmented Polyurethane over High-Build Epoxy System:

a. Block Filler: Block filler, epoxy.

1) Benjamin Moore; Corotech; Epoxy Mastic Coating, V160.
2) PPG Architectural; Amerlock 400 BF, AK400B-x.
3) Sherwin-Williams; Kem-Cati-Coat HS Epoxy Filler/Sealer, B42W00400.

b. Intermediate Coat: Epoxy, high build, low gloss.

1) Benjamin Moore; Corotech; Polyamide Epoxy Semi-Gloss, V400-91.
2) PPG Architectural; Aquapon High Build Epoxy, 97-131.
3) Sherwin-Williams; Macropoxy 646 Fast Cure Epoxy.

c. Topcoat: Polyurethane, two component, pigmented, gloss (MPI Gloss Level 6).

1) Benjamin Moore; Corotech, Aliphatic Acrylic Urethane Gloss, V500.
2) PPG Architectural; Pitthane Ultra Gloss 95-812 Series.
3) Sherwin-Williams; Acrolon 218 HS, B65W611.

B. Steel Substrates:

1. Pigmented Polyurethane over High-Build Epoxy System:

a. Prime Coat: Primer, epoxy, anti-corrosive, for metal.

1) Benjamin Moore; Corotech Surface Tolerant Epoxy Mastic Coating, V160.
2) PPG Architectural; Amerlock 600, AK600.
3) Sherwin-Williams; Duraplate 235 Multi-Purpose Epoxy, B67W235

b. Intermediate Coat: Epoxy, high build, low gloss.

1) Benjamin Moore; Corotech; Polyamide Epoxy Semi-Gloss, V400-91.
2) PPG Architectural; Aquapon High Build Epoxy, 97-131.
3) Sherwin-Williams; Macropoxy 646 Fast Cure Epoxy.

c. Topcoat: Polyurethane, two component, pigmented, gloss (MPI Gloss Level 6).

1) Benjamin Moore; Corotech, Aliphatic Acrylic Urethane Gloss, V500.
2) PPG Architectural; Pitthane Ultra Gloss 95-812 Series.
3) Sherwin-Williams; Acrolon 218 HS, B65W611.

C. Galvanized-Metal Substrates:

1. Pigmented Polyurethane over Epoxy Primer System:

a. Prime Coat: Primer, epoxy, anti-corrosive, for metal.

1) Benjamin Moore; Corotech Surface Tolerant Epoxy Mastic Coating, V160.
2) PPG Architectural; Amerlock 600, AK600.
3) Sherwin-Williams; Duraplate 235 Multi-Purpose Epoxy, B67W235

b. Intermediate Coat: Polyurethane, two component, pigmented, gloss matching topcoat.
c. Topcoat: Polyurethane, two component, pigmented, gloss (MPI Gloss Level 6).

1) Benjamin Moore; Corotech, Aliphatic Acrylic Urethane Gloss, V500.
2) PPG Architectural; Pitthane Ultra Gloss 95-812 Series.

3) Sherwin-Williams; Acrolon 218 HS, B65W611.

END OF SECTION 099600

SECTION 102239 - FOLDING PANEL PARTITIONS

PART 1 - GENERAL

1.1 SUMMARY

A. Section Includes:

1. Manually operated, acoustical panel partitions.

1.2 PREINSTALLATION MEETINGS

A. Preinstallation Conference: Conduct conference at Project site.

1.3 ACTION SUBMITTALS

A. Product Data: For each type of product.

B. Shop Drawings: For operable panel partitions.

1. Include plans, elevations, sections, attachment details, and numbered panel installation sequence.
2. Indicate stacking and operating clearances. Indicate location and installation requirements for hardware and track, blocking, and direction of travel.
3. Include diagrams for power, signal, and control wiring.

C. Samples for Verification: For each type of exposed material, finish, covering, or facing, prepared on Samples of size indicated below:

1. Panel Facing Material: Manufacturer's standard-size unit, not less than 3 inches square.
2. Panel Edge Material: Not less than 3 inches long.

D. Delegated-Design Submittal: For operable panel partitions.

1. Include design calculations for seismic restraints that brace tracks to structure above.

1.4 INFORMATIONAL SUBMITTALS

A. Coordination Drawings: Reflected ceiling plans, drawn to scale, on which the following items are shown and coordinated with each other, using input from installers of the items involved:

1. Partition track, track supports and bracing, switches, turning space, and storage layout.
2. Suspended ceiling components.
3. Structural members to which suspension systems will be attached.
4. Size and location of initial access modules for acoustical tile.
5. Items penetrating finished ceiling including the following:

a. Lighting fixtures.
b. HVAC ductwork, outlets, and inlets.
c. Speakers.
d. Sprinklers.
e. Smoke detectors.
f. Access panels.

6. Plenum acoustical barriers.

B. Setting Drawings: For embedded items and cutouts required in other work, including support-beam, mounting-hole template.

C. Qualification Data: For Installer.

D. Seismic Qualification Certificates: For operable panel partitions, tracks, accessories, and components, from manufacturer. Include seismic capacity of partition assemblies to remain in vertical position during a seismic event and the following:

1. Basis for Certification: Indicate whether certification is based on analysis, testing, or experience data, according to ASCE/SEI 7.
2. Detailed description of partition anchorage devices on which the certification is based and their installation requirements.

E. Product Certificates: For each type of operable panel partition.

F. Product Test Reports: For each operable panel partition, for tests performed by a qualified testing agency.

G. Sample Warranty: For manufacturer's special warranty.

1.5 CLOSEOUT SUBMITTALS

A. Operation and Maintenance Data: For operable panel partitions to include in maintenance manuals.

1. In addition to items specified in Section 017823 "Operation and Maintenance Data," include the following:

a. Panel finish facings and finishes for exposed trim and accessories. Include precautions for cleaning materials and methods that could be detrimental to finishes and performance.
b. Seals, hardware, track, track switches, carriers, and other operating components.

1.6 QUALITY ASSURANCE

A. Installer Qualifications: An entity that employs installers and supervisors who are trained and approved by manufacturer.

1.7 DELIVERY, STORAGE, AND HANDLING

A. Protectively package and sequence panels in order for installation. Clearly mark packages and panels with numbering system used on Shop Drawings. Do not use permanent markings on panels.

1.8 WARRANTY

A. Special Warranty: Manufacturer agrees to repair or replace components of operable panel partitions that fail in materials or workmanship within specified warranty period.

1. Failures include, but are not limited to, the following:

a. Faulty operation of operable panel partitions.
b. Deterioration of metals, metal finishes, and other materials beyond normal use.

2. Warranty Period: Three years from date of Substantial Completion.

PART 2 - PRODUCTS

2.1 PERFORMANCE REQUIREMENTS

A. Delegated Design: Engage a qualified professional engineer, as defined in Section 014000 "Quality Requirements," to design seismic bracing of tracks to structure above.

B. Seismic Performance: Operable panel partitions shall withstand the effects of earthquake motions determined according to ASCE/SEI 7.

1. The term "withstand" means "the partition panels will remain in place without separation of any parts when subjected to the seismic forces specified."

C. Acoustical Performance: Provide operable panel partitions tested by a qualified testing agency for the following acoustical properties according to test methods indicated:

1. Sound-Transmission Requirements: Operable panel partition assembly tested for laboratory sound-transmission loss performance according to ASTM E90, determined by ASTM E413, and rated for not less than the STC indicated.

2. Noise-Reduction Requirements: Operable panel partition assembly, identical to partition tested for STC, tested for sound-absorption performance according to ASTM C423, and rated for not less than the NRC indicated.

D. Fire-Test-Response Characteristics: Provide panels with finishes complying with one of the following as determined by testing identical products by a testing and inspecting agency acceptable to authorities having jurisdiction:

1. Surface-Burning Characteristics: Comply with ASTM E84; testing by a qualified testing agency. Identify products with appropriate markings of applicable testing agency.

a. Flame-Spread Index: 25 or less.
b. Smoke-Developed Index: 450 or less.

2. Fire Growth Contribution: Complying with acceptance criteria of local code and authorities having jurisdiction when tested according to NFPA 286.

2.2 OPERABLE ACOUSTICAL PANELS

A. Operable Acoustical Panels: Partition system, including panels, seals, finish facing, suspension system, operators, and accessories.

1. Basis of Design: Subject to compliance with requirements, provide basis of design indicated or comparable products by one of the following:

a. Modernfold, Inc.; Encore Acousti-Seal Model 931 Single Panel Partitions (Basis of Design)
b. Advanced Equipment Corporation.
c. Kwik-Wall Company.
d. Moderco.

B. Panel Operation: Manually operated, individual panels.

C. Panel Construction: As required to support panel from suspension components and with reinforcement for hardware attachment. Fabricate panels with tight hairline joints and concealed fasteners. Fabricate panels so finished in-place partition is rigid; level; plumb; aligned, with tight joints and uniform appearance; and free of bow, warp, twist, deformation, and surface and finish irregularities.

D. Dimensions: Fabricate operable acoustical panel partitions to form an assembled system of dimensions indicated and verified by field measurements.

1. Panel Width: Equal widths.

E. STC: Not less than 54.

F. Panel Weight: 8 lb/sq. ft. maximum.

G. Panel Thickness: Nominal dimension of 3 inches.

H. Panel Materials:

1. Steel Frame: Steel sheet, manufacturer's standard nominal minimum thickness for uncoated steel.
2. Medium-Density Fiberboard: ANSI A208.2.

I. Panel Closure: Manufacturer's standard unless otherwise indicated.

1. Final Closure: Constant-force, lever-operated mechanical closure expanding from panel edge to create a constant-pressure acoustical seal.

J. Hardware: Manufacturer's standard as required to operate operable panel partition and accessories; with decorative, protective finish.

1. Hinges: Manufacturer's standard.

K. Finish Facing: ~~Wood veneer~~ **Fabric wall covering.**

2.3 SEALS

A. Description: Seals that produce operable panel partitions complying with performance requirements and the following:

1. Manufacturer's standard seals unless otherwise indicated.
2. Seals made from materials and in profiles that minimize sound leakage.
3. Seals fitting tight at contact surfaces and sealing continuously between adjacent panels and between operable panel partition perimeter and adjacent surfaces, when operable panel partition is extended and closed.

B. Vertical Seals: Deep-nesting, interlocking steel astragals mounted on each edge of panel, with continuous, resilient acoustical seal.

C. Horizontal Top Seals: Continuous-contact, resilient seal exerting uniform constant pressure on track or resilient, mechanical, retractable, constant-force-contact seal exerting uniform constant pressure on track when extended.

D. Horizontal Bottom Seals: Resilient, mechanical, retractable, constant-force-contact seal exerting uniform constant pressure on floor when extended, ensuring horizontal and vertical sealing and resisting panel movement.

1. Automatically Operated for Acoustical Panels: Extension and retraction of bottom seal automatically operated by movement of partition, with operating range not less than 2 inches between retracted seal and floor finish.

a. Basis-of-Design: Modernfold; SureSet.

2.4 PANEL FINISH FACINGS

A. Description: Finish facings for panels that comply with indicated fire-test-response characteristics and that are factory applied to operable panel partitions with appropriate backing, using mildew-resistant nonstaining adhesive as recommended by facing manufacturer's written instructions.

1. Apply facings free of air bubbles, wrinkles, blisters, and other defects, with invisible seams complying with Shop Drawings for location, and with no gaps or overlaps. Horizontal butted edges or seams are not permitted. Tightly secure and conceal raw and selvage edges of facing for finished appearance.

2. Where facings with directional or repeating patterns or directional weave are indicated, mark facing top and attach facing in same direction.

3. Match facing pattern 72 inches above finished floor.

B. **Fabric Wall Covering: Manufacturer's standard fabric, from same dye lot, treated to resist stains.**

1. **Color/Pattern: Basis-of-Design Product:**

a. **Maharam; Tek-Wall Ridge 300048 04 Wombat.**

~~C. Wood Veneer: Laminated to noncombustible core with moisture-resistant adhesive.~~

~~1. Species and Cut: Select White Maple, plain sliced.~~
~~2. Matching of Adjacent Veneer Leaves: Slip match.~~
~~3. Veneer Matching within Panel Face: Balance match.~~
~~4. Panel-Matching Method: No matching between panels is required. Select and arrange panels for similarity of grain pattern and color between adjacent panels.~~

~~5. Wood-Veneer Finish: As selected by Architect from manufacturer's full range, as follows:~~

~~a. Type: Transparent finish over stain over wood variety indicated.~~

D. Cap-Trimmed Edges: Protective perimeter-edge trim with tight hairline joints concealing edges of panel and finish facing, finished as follows:

1. Aluminum: Finished with manufacturer's standard color anodic finish.

a. Color: Dark bronze.

2.5 SUSPENSION SYSTEMS

A. Tracks: Steel with adjustable steel hanger rods for overhead support, designed for operation, size, and weight of operable panel partition indicated. Size track to support partition operation and storage without damage to suspension system, operable panel partitions, or adjacent construction. Limit track deflection to no more than 0.10 inch between bracket supports. Provide a continuous system of track sections and accessories to accommodate configuration and layout indicated for partition operation and storage. Aluminum tracks are not acceptable.

1. Exposed Track Soffit: Steel, integral to track, and pre-painted off-white.

2. Head Closure Trim: As required for acoustical performance; with factory-applied, decorative, protective finish.

B. Carriers: Two all-steel trolleys with steel-tired ball bearing wheels. Non-steel tires are not acceptable. Suspension system shall provide automatic indexing of panels into stack area using preprogrammed switches and trolleys without electrical, pneumatic, or mechanical activation.

C. Steel Finish: Manufacturer's standard, factory-applied, corrosion-resistant, protective coating unless otherwise indicated.

2.6 ACCESSORIES

A. Pass Doors: Swinging door built into and matching panel materials, construction, acoustical qualities, finish and thickness, complete with frames and operating hardware. Hinges finished to match other exposed hardware.

1. Accessibility Standard: Fabricate doors to comply with applicable provisions in the ABA standards of the Federal agency having jurisdiction and ICC A117.1.
2. Pass-Door Hardware: Equip pass door with the following:

a. Friction latch and flush pulls for panic operation.
b. Exit Sign: Recessed, self-illuminated.

B. Storage Pocket Door: Full height at end of partition runs to conceal stacked partition; of same materials, finish, construction, thickness, and acoustical qualities as panels; complete with operating hardware and acoustical seals at soffit, floor, and jambs. Hinges in finish to match other exposed hardware.

1. Manufacturer's standard method to secure storage pocket door in closed position.

PART 3 - EXECUTION

3.1 EXAMINATION

A. Examine flooring, floor levelness, structural support, and opening, with Installer present, for compliance with requirements for installation tolerances and other conditions affecting performance of operable panel partitions.

B. Proceed with installation only after unsatisfactory conditions have been corrected.

3.2 INSTALLATION

A. Install operable panel partitions and accessories after other finishing operations, including painting, have been completed in area of partition installation.

B. Install panels in numbered sequence indicated on Shop Drawings.

C. Broken, cracked, chipped, deformed, or unmatched panels are not acceptable.

D. Broken, cracked, deformed, or unmatched gasketing or gasketing with gaps at butted ends is not acceptable.

3.3 ADJUSTING

A. Adjust operable panel partitions, hardware, and other moving parts to function smoothly, and lubricate as recommended by manufacturer.

B. Adjust storage pocket doors to operate smoothly and easily, without binding or warping.

C. Verify that safety devices are properly functioning.

END OF SECTION 102239

SECTION 105626 - MOBILE STORAGE SHELVING

PART 1 - GENERAL

1.1 SUMMARY

A. Section Includes:

1. Mechanically assisted systems.

B. Products Furnished But Not Installed Under This Section:

1. Inserts in cast-in-place concrete.

1.2 COORDINATION

A. Recessed Tracks: Coordinate size and location of recesses and inserts in concrete with installation of recessed tracks.

1.3 PREINSTALLATION MEETINGS

A. Preinstallation Conference: Conduct conference at Project site.

1.4 ACTION SUBMITTALS

A. Product Data: For each type of product.

1. Include mobile operation, construction details, material descriptions, dimensions of individual components and profiles, and finishes for mobile storage shelving systems and accessories.

B. Shop Drawings:

1. Include plans, elevations, sections, and details.
2. Show shelving layout.
3. Show location and extent of rail system including depth required if recessed.
4. Show clear-aisle widths from face of carriages.

C. Samples for Verification: For the following products, one of each, in manufacturer's standard size:

1. Flat shelving.
2. Each type of specialized shelving.
3. Front panels.

D. Delegated-Design Submittal: For mobile storage shelving, including analysis data signed and sealed by the qualified professional engineer responsible for their preparation.

1.5 INFORMATIONAL SUBMITTALS

A. Qualification Data: For Installer and manufacturer.

B. Sample Warranty: For manufacturer's special warranty.

1.6 CLOSEOUT SUBMITTALS

A. Maintenance Data: For mobile shelving systems and operating manuals to include in maintenance manuals.

1.7 QUALITY ASSURANCE

A. Manufacturer Qualifications: A manufacturer capable of fabricating mobile storage shelving that meets or exceeds performance requirements indicated and of documenting this performance by test reports, and calculations.

B. Installer Qualifications: An entity that employs installers and supervisors who are trained and approved by manufacturer.

1.8 PROJECT CONDITIONS

A. Field Measurements: Verify actual locations of support rail anchors, depressed slab, embedded conduit, and other construction contiguous with mobile storage shelving by field measurements before fabrication.

1.9 WARRANTY

A. Special Warranty: Manufacturer agrees to repair or replace components of mobile shelving systems that fail in materials or workmanship within specified warranty period.

1. Failures include, but are not limited to, the following:

a. Deterioration of metals, metal finishes, and other materials beyond normal wear.

2. Warranty Period: Five years from date of Substantial Completion.

PART 2 - PRODUCTS

2.1 MANUFACTURERS

A. Source Limitations: Obtain mobile storage systems including shelving from single manufacturer.

2.2 PERFORMANCE REQUIREMENTS

A. Delegated-Design Submittal: For mobile storage shelving, including analysis data signed and sealed by the qualified professional engineer responsible for their preparation.

2.3 SYSTEMS AND COMPONENTS

A. General: Provide manufacturer's standard mobile storage shelving systems and components. Where components are not otherwise indicated, provide manufacturer's standard components as required for a complete system.

B. Inserts: Furnish required concrete inserts and similar anchorage devices for installing track system, and furnish other components of work where installation of devices is specified in another Section.

C. Tracks: Steel rails with tops machined to mate with guide wheels and with ends designed to provide smooth, secure continuity between sections without field welding. Provide mounting brackets, anchorage

devices, adjustable leveling devices, and stops at terminations of rails to prevent carriages from running off track ends.

1. Mounting: Recessed.

D. Carriages: Rigid frames consisting of C-shaped cold-formed steel beams and cross beams, designed to allow secure anchorage of shelving units.

1. Carriage Width: Manufacturer's standard.
2. Carriage Length: Manufacturer's standard.
3. Wheels: Manufacturer's standard number of bearing-mounted, steel wheels, precision ground to mate with tracks.
4. Bumpers: Provide two rubber bumpers with minimum depth of 1/2 inch each side.

E. Anti-Tip Brackets: Mount on carriage for engagement with track system to secure units against tipping.

F. Carriage End Panels: Full depth and height of shelving units. Provide at both ends of each range.

1. Material: Cold-rolled steel sheet, 0.048 inch thick.

2.4 MECHANICALLY ASSISTED SYSTEMS

A. Basis-of-Design: Subject to compliance with requirements, provide mobile storage shelving system provided by the following:

1. Patterson Pope **(Basis-of-Design).**
2. **Bradford Systems.**
3. **Datum Mobile Storage Systems.**
4. **Nelson Industrial.**
5. **Spacesaver.**

B. Drive Systems: Geared transmission and chain systems with tensioning device to provide mechanical assistance and uniform movement along entire length of each carriage. Permanently shielded and lubricated.

C. Drive Shaft: Continuous tubular or solid steel shaft, capable of transmitting torque from drive system without distortion.

D. Locking Pins: Located on range end panels to allow locking of individual range carriage when depressed.

2.5 STEEL-CASE SHELVING

A. Steel-Case Shelving: Shelving consisting of full end, top, and back panels, with end panels made to receive adjustable shelves in slots or to receive clips to support adjustable shelves. Configure units for mounting on mobile carriages.

B. Shelving Units:

1. Type: Self-supporting unit.
2. Configuration: Double-faced units.
3. Width: As indicated on Drawings.
4. Height: As indicated on Drawings.
5. Shelf Depth: 12 inches nominal.

C. Shelving Unit End Panels: Double wall; 0.048-inch- thick cold-rolled steel sheet, with slots to accept shelves at 3/4-inch intervals.

D. Base: Manufacturer's standard for attachment to mobile carriages.

E. Adjustable Shelves: 0.036-inch- thick cold-rolled steel sheet.

1. Provide manufacturer's standard attachment clips.

F. Shelving Back Panels: 0.024-inch- thick cold-rolled steel sheet, sized to completely fill space between uprights.

G. Canopy Tops: Formed into box shape; 0.036-inch- thick cold-rolled steel sheet.

2.6 STEEL FOUR-POST SHELVING

A. Steel Four-Post Shelving: Shelving consisting of four angle-iron uprights per section, with adjustable shelves resting on shelf supports hung on uprights. Configure units for mounting on mobile carriages.

B. Shelving Units:

1. Type: Self-supporting unit.
2. Configuration: Open with center dividers.
3. Width: As indicated on Drawings.
4. Height: As indicated on Drawings.
5. Shelf Depth: 24 inches nominal.

C. Uprights: Double-wall steel posts, 2 inches wide, 0.048 inch thick, in manufacturer's standard T-shape for common-post use or L-shape at range ends, with keyhole perforations on the inner wall at 1-1/2 inches o.c.

D. Steel Spacers: Provide 0.048-inch- thick steel spacers, 3 inches high, welded to posts at bottom, center, and top of open units to prevent deflection.

E. Center Divider: 0.024-inch- thick cold-rolled steel sheets.

F. Base: Manufacturer's standard for attachment to mobile carriages.

G. Adjustable Steel Shelves: 0.030-inch- thick cold-rolled steel sheet.

1. Shelf Supports: Full-shelf-width supports; 0.075-inch- thick steel, minimum 3/4 inches high, with flange to support shelf reinforcements and with ear at each end containing two shoulder rivets with 7/16-inch heads spaced to set into keyhole slots on uprights.
2. Shelf Reinforcements: Channel shapes equal in length to depth of the supported shelf; 0.060-inch- thick steel channels, with notched ends to fit over inside lip of shelf support.

2.7 STEEL FINISHES

A. Appearance of Finished Work: Noticeable variations in same piece are not acceptable. Variations in appearance of adjoining components are acceptable if they are within the range of approved Samples and are assembled or installed to minimize contrast.

B. Baked-Enamel or Powder-Coat Finish: Manufacturer's standard two-coat, baked-on finish consisting of prime coat and thermosetting topcoat to achieve a minimum dry film thickness of 2 mils.

1. Color and Gloss: As selected by Architect from manufacturer's full range.

PART 3 - EXECUTION

3.1 EXAMINATION

A. Examine areas, with Installer present, for compliance with requirements for installation tolerances, location of framing and reinforcements, minimum recess depth, and other conditions affecting performance of mobile shelving systems.

B. Proceed with installation only after unsatisfactory conditions have been corrected.

3.2 INSTALLATION

A. Level and plumb tracks to a tolerance of 0.09 inch in 120 inches with no more than 0.06-inch variation between adjacent rails. Use permanent shims or non-shrink grout as indicated by manufacturer.

B. Recessed Track Systems: Solidly fill gaps between slab and rail according to manufacturer's written instructions to secure tracks and prevent movement.

3.3 SHELVING INSTALLATION

A. Attach shelving units to carriages according to manufacturer's written instructions and as required to prevent vibration during movement.

1. Level and plumb shelving units to a tolerance of 1/8 inch in 96 inches.

B. Starter/Adder Units: Connect groups together with standard fasteners according to manufacturer's written instructions, using concealed fasteners where possible.

C. Install shelves in shelving units at locations indicated on Drawings and according to manufacturer's written instructions.

D. Shelving Enclosure Panels: Install end panels and canopy tops with concealed fasteners.

3.4 CLEANING AND PROTECTING

A. Repair or remove and replace defective work as directed on completion of installation.

B. Clean finished surfaces, touch up as required, and remove or refinish damaged or soiled areas to match original factory finish, as approved by Architect.

C. Protect installed products from damage during remainder of the construction period.

3.5 DEMONSTRATION

A. Engage a factory-authorized service representative to train Owner's maintenance personnel to adjust, operate, and maintain mobile storage shelving.

END OF SECTION 105626

SECTION 221413 - FACILITY STORM DRAINAGE PIPING

PART 1 - GENERAL

1.1 RELATED DOCUMENTS

A. Drawings and general provisions of the Contract, including General and Supplementary Conditions and Division 01 Specification Sections, apply to this Section.

1.2 SUMMARY

A. Section Includes:

1. Hub-and-spigot, cast-iron soil pipe and fittings.
2. Hubless, cast-iron soil pipe and fittings.
3. **PVC pipes and fittings (underground only)**

B. Related Requirements:

1. Section 221429 "Sump Pumps" for storm drainage pumps.
2. Section 334400 "Stormwater Utility Equipment" for storm drainage piping outside the building.

1.3 ACTION SUBMITTALS

A. Product Data: For each type of product.

B. Shop Drawings: For roof drainage system.

1.4 INFORMATIONAL SUBMITTALS

A. Coordination Drawings: Detail storm drainage piping. Show support locations, type of support, weight on each support, required clearances, and other details, drawn to scale, on which the following items are shown and coordinated with each other, using input from installers of the items involved:

1. Structural members to which drainage piping will be attached or suspended from.

B. Field quality-control reports.

1.5 QUALITY ASSURANCE

A. Piping materials shall bear label, stamp, or other markings of specified testing agency.

PART 2 - PRODUCTS

2.1 PERFORMANCE REQUIREMENTS

A. Components and installation shall be capable of withstanding the following minimum working pressure unless otherwise indicated:

1. Storm Drainage Piping: 10-foot head of water.
2. Storm Drainage, Force-Main Piping: 50 psig.

2.2 HUB-AND-SPIGOT, CAST-IRON SOIL PIPE AND FITTINGS

A. Pipe and Fittings:

1. Marked with CISPI collective trademark and NSF certification mark.
2. Class: ASTM A 74, Service class(es).

B. Gaskets: ASTM C 564, rubber.

2.3 HUBLESS, CAST-IRON SOIL PIPE AND FITTINGS

A. Pipe and Fittings:

1. Marked with CISPI collective trademark and NSF certification mark.
2. Standard: ASTM A 888 or CISPI 301.

B. Heavy-Duty, Hubless-Piping Couplings:

1. Standard: ASTM C 1540.
2. Description: Stainless-steel shield with stainless-steel bands and tightening devices; and ASTM C 564, rubber sleeve with integral, center pipe stop.

2.4 PVC PIPE AND FITTINGS (UNDERGROUND ONLY)

A. Comply with NSF 14, "Plastics Piping Systems Components and Related Materials," for plastic piping components. Include marking with "NSF-dwv" for plastic drain, waste, and vent piping and "NSF-sewer" for plastic sewer piping.

B. Solid-Wall PVC Pipe: ASTM D 2665, drain, waste, and vent.

C. PVC Socket Fittings: ASTM D 2665, made to ASTM D 3311, drain, waste, and vent patterns and to fit Schedule 40 pipe.

D. Adhesive Primer: ASTM F 656.

E. Solvent Cement: ASTM D 2564.

F. Solvent Cement: ASTM D 2564.

2.5 SPECIALTY PIPE FITTINGS

A. Transition Couplings:

1. General Requirements: Fitting or device for joining piping with small differences in ODs or of different materials. Include end connections same size as and compatible with pipes to be joined.
2. Fitting-Type Transition Couplings: Manufactured piping coupling or specified-piping-system fitting.
3. Unshielded, Nonpressure Transition Couplings:

    a. Standard: ASTM C 1173.
    b. Description: Elastomeric sleeve, reducing or transition pattern. Include shear ring and corrosion-resistant-metal tension band and tightening mechanism on each end.
    c. Sleeve Materials:

        1) For Cast-Iron Soil Pipes: ASTM C 564, rubber.
        2) For Plastic Pipes: ASTM F 477, elastomeric seal or ASTM D 5926, PVC.
        3) For Dissimilar Pipes: ASTM D 5926, PVC or other material compatible with pipe materials being joined.

4. Shielded, Nonpressure Transition Couplings:

    a. Standard: ASTM C 1460.
    b. Description: Elastomeric or rubber sleeve with full-length, corrosion-resistant outer shield and corrosion-resistant-metal tension band and tightening mechanism on each end.
    c. End Connections: Same size as and compatible with pipes to be joined.

5. Pressure Transition Couplings:

    a. Standard: AWWA C219.
    b. Description: Metal, sleeve-type couplings same size as pipes to be joined, and with pressure rating at least equal to and ends compatible with pipes to be joined.
    c. Center-Sleeve Material: ~~[**Manufacturer's standard**] [**Carbon steel**] [**Stainless steel**] [**Ductile iron**]~~ [**Malleable iron**~~]~~.
    d. Gasket Material: Natural or synthetic rubber.
    e. Metal Component Finish: Corrosion-resistant coating or material.

B. Dielectric Fittings:

1. General Requirements: Assembly of copper alloy and ferrous materials with separating nonconductive insulating material. Include end connections compatible with pipes to be joined.
2. Dielectric Nipples:
    a. Description: Electroplated steel nipple.
    b. Standard: IAPMO PS 66.
    c. Pressure Rating: 300 psig at 225 deg F.
    d. End Connections: Male threaded or grooved.
    e. Lining: Inert and noncorrosive, propylene.

PART 3 - EXECUTION

3.1 EARTH MOVING

A. Comply with requirements for excavating, trenching, and backfilling specified in Section 312000 "Earth Moving."

3.2 PIPING INSTALLATION

A. Drawing plans, schematics, and diagrams indicate general location and arrangement of piping systems.

1. Indicated locations and arrangements were used to size pipe and calculate friction loss, expansion, pump sizing, and other design considerations.
2. Install piping as indicated unless deviations from layout are approved on coordination drawings.

B. Install piping in concealed locations unless otherwise indicated and except in equipment rooms and service areas.

C. Install piping indicated to be exposed and piping in equipment rooms and service areas at right angles or parallel to building walls. Diagonal runs are prohibited unless specifically indicated otherwise.

D. Install piping above accessible ceilings to allow sufficient space for ceiling panel removal.

E. Install piping to permit valve servicing.

F. Install piping at indicated slopes.

G. Install piping free of sags and bends.

H. Install fittings for changes in direction and branch connections.

I. Install piping to allow application of insulation.

J. Make changes in direction for piping using appropriate branches, bends, and long-sweep bends.

1. Do not change direction of flow more than 90 degrees.
2. Use proper size of standard increasers and reducers if pipes of different sizes are connected.

a. Reducing size of drainage piping in direction of flow is prohibited.

K. Lay buried building piping beginning at low point of each system.

1. Install true to grades and alignment indicated, with unbroken continuity of invert. Place hub ends of piping upstream.
2. Install required gaskets according to manufacturer's written instructions for use of lubricants, cements, and other installation requirements.
3. Maintain swab in piping and pull past each joint as completed.

L. Install piping at the following minimum slopes unless otherwise indicated:

1. Building Storm Drain: 2 percent downward in direction of flow for piping NPS 3 and smaller; 2 percent downward in direction of flow for piping NPS 4 and larger.
2. Horizontal Storm Drainage Piping: 2 percent downward in direction of flow.

M. Install cast-iron soil piping according to CISPI's "Cast Iron Soil Pipe and Fittings Handbook," Chapter IV, "Installation of Cast Iron Soil Pipe and Fittings."

1. Install encasement on underground piping according to ASTM A 674 or AWWA C105/A 21.5.

N. Install aboveground copper tubing according to CDA's "Copper Tube Handbook."

O. Install underground, copper, force-main tubing according to CDA's "Copper Tube Handbook."

1. Install encasement on piping according to ASTM A 674 or AWWA C105/A 21.5.

P. Install force mains at elevations indicated.

Q. Plumbing Specialties:

1. Install backwater valves in storm drainage gravity-flow piping.

a. Comply with requirements for backwater valves specified in Section 221423 "Storm Drainage Piping Specialties."

2. Install cleanouts at grade and extend to where building storm drains connect to building storm sewers in storm drainage gravity-flow piping.

a. Install cleanout fitting with closure plug inside the building in storm drainage force-main piping.
b. Comply with requirements for cleanouts specified in Section 221423 "Storm Drainage Piping Specialties."

3. Install drains in storm drainage gravity-flow piping.

a. Comply with requirements for drains specified in Section 221423 "Storm Drainage Piping Specialties."

R. Do not enclose, cover, or put piping into operation until it is inspected and approved by authorities having jurisdiction.

S. Install sleeves for piping penetrations of walls, ceilings, and floors.

1. Comply with requirements for sleeves specified in Section 220517 "Sleeves and Sleeve Seals for Plumbing Piping."

T. Install sleeve seals for piping penetrations of concrete walls and slabs.

1. Comply with requirements for sleeve seals specified in Section 220517 "Sleeves and Sleeve Seals for Plumbing Piping."

U. Install escutcheons for piping penetrations of walls, ceilings, and floors.

1. Comply with requirements for escutcheons specified in Section 220518 "Escutcheons for Plumbing Piping."

3.3 JOINT CONSTRUCTION

A. Hub-and-Spigot, Cast-Iron Soil Piping Gasketed Joints: Join according to CISPI's "Cast Iron Soil Pipe and Fittings Handbook" for compression joints.

B. Hub-and-Spigot, Cast-Iron Soil Piping Caulked Joints: Join according to CISPI's "Cast Iron Soil Pipe and Fittings Handbook" for lead-and-oakum caulked joints.

C. Hubless, Cast-Iron Soil Piping Coupled Joints:

1. Join according to CISPI 310 and CISPI's "Cast Iron Soil Pipe and Fittings Handbook" for hubless-piping coupling joints.

D. Join copper tube and fittings with soldered joints according to ASTM B 828 procedure. Use ASTM B 813, water-flushable, lead-free flux and ASTM B 32, lead-free-alloy solder.

E. Joint Restraints and Sway Bracing:

1. Provide joint restraints and sway bracing for storm drainage piping joints to comply with the following conditions:

a. Provide axial restraint for pipe and fittings 5 inches and larger, upstream and downstream of all changes in direction, branches, and changes in diameter greater than two pipe sizes.
b. Provide rigid sway bracing for pipe and fittings 4 inches and larger, upstream and downstream of all changes in direction 45 degrees and greater.
c. Provide rigid sway bracing for pipe and fittings 5 inches and larger, upstream and downstream of all changes in direction and branch openings.

3.4 SPECIALTY PIPE FITTING INSTALLATION

A. Dielectric Fittings:

1. Install dielectric fittings in piping at connections of dissimilar metal piping and tubing.
2. Dielectric Fittings for NPS 2 and Smaller: Use dielectric nipples.

3.5 VALVE INSTALLATION

A. General valve installation requirements for general-duty valve installations are specified in the following Sections:

1. Section 220523.12 "Ball Valves for Plumbing Piping."
2. Section 220523.13 "Butterfly Valves for Plumbing Piping."
3. Section 220523.14 "Check Valves for Plumbing Piping."
4. Section 220523.15 "Gate Valves for Plumbing Piping."

B. Shutoff Valves:

1. Install shutoff valve on each sump pump discharge.
2. Install full port ball valve for piping NS 2 and smaller.
3. Install gate valve for piping NPS 2-1/2 and larger.

C. Check Valves: Install swing-check valve, between pump and shutoff valve, on each sump pump discharge.

D. Backwater Valves: Install backwater valves in piping subject to backflow.

1. Horizontal Piping: Horizontal backwater valves. Use normally closed type unless otherwise indicated.
2. Install backwater valves in accessible locations.
3. Comply with requirements for backwater valves specified in Section 221423 "Storm Drainage Piping Specialties."

3.6 INSTALLATION OF HANGERS AND SUPPORTS

A. Comply with requirements for seismic-restraint devices specified in Section 220548 "Vibration and Seismic Controls for Plumbing Piping and Equipment."

B. Comply with requirements for hangers, supports, and anchor devices specified in Section 220529 "Hangers and Supports for Plumbing Piping and Equipment."

1. Install carbon-steel pipe hangers for horizontal piping in noncorrosive environments.
2. Install stainless-steel pipe hangers for horizontal piping in corrosive environments.
3. Install carbon-steel pipe support clamps for vertical piping in noncorrosive environments.
4. Install stainless-steel pipe support clamps for vertical piping in corrosive environments.
5. Vertical Piping: MSS Type 8 or Type 42, clamps.
6. Install individual, straight, horizontal piping runs:

    a. 100 Feet and Less: MSS Type 1, adjustable, steel clevis hangers.
    b. Longer Than 100 Feet: MSS Type 43, adjustable roller hangers.
    c. Longer Than 100 Feet if Indicated: MSS Type 49, spring cushion rolls.

7. Multiple, Straight, Horizontal Piping Runs 100 Feet or Longer: MSS Type 44, pipe rolls. Support pipe rolls on trapeze.
8. Base of Vertical Piping: MSS Type 52, spring hangers.

C. Install hangers for cast-iron and copper soil piping, with maximum horizontal spacing and minimum rod diameters, to comply with MSS-58, locally enforced codes, and authorities having jurisdiction requirements, whichever are most stringent.

D. Support horizontal piping and tubing within 12 inches of each fitting and coupling.

E. Support vertical cast-iron and copper piping to comply with MSS-58, locally enforced codes, and authorities having jurisdiction requirements, whichever are most stringent, but as a minimum at base and at each floor.

3.7 CONNECTIONS

A. Drawings indicate general arrangement of piping, fittings, and specialties.

B. Connect interior storm drainage piping to exterior storm drainage piping. Use transition fitting to join dissimilar piping materials.

C. Connect storm drainage piping to roof drains and storm drainage specialties.

1. Install test tees (wall cleanouts) in conductors near floor, and floor cleanouts with cover flush with floor.
2. Install horizontal backwater valves with cleanout cover flush with floor
3. Comply with requirements for backwater valves cleanouts and drains specified in Section 221423 "Storm Drainage Piping Specialties."

D. Connect force-main piping to the following:

1. Storm Sewer: To exterior force main.
2. Sump Pumps: To sump pump discharge.

E. Where installing piping adjacent to equipment, allow space for service and maintenance.

F. Make connections according to the following unless otherwise indicated:

1. Install unions, in piping NPS 2 and smaller, adjacent to each valve and at final connection to each piece of equipment.
2. Install flanges, in piping NPS 2-1/2 and larger, adjacent to flanged valves and at final connection to each piece of equipment.

3.8 IDENTIFICATION

A. Identify exposed storm drainage piping.

B. Comply with requirements for identification specified in Section 220553 "Identification for Plumbing Piping and Equipment."

3.9 FIELD QUALITY CONTROL

A. During installation, notify authorities having jurisdiction at least 24 hours before inspection must be made. Perform tests specified below in presence of authorities having jurisdiction.

1. Roughing-in Inspection: Arrange for inspection of piping before concealing or closing-in after roughing-in.
2. Final Inspection: Arrange for final inspection by authorities having jurisdiction to observe tests specified below and to ensure compliance with requirements.

B. Test storm drainage piping according to procedures of authorities having jurisdiction or, in absence of published procedures, as follows:

1. Test for leaks and defects in new piping and parts of existing piping that have been altered, extended, or repaired.

    a. If testing is performed in segments, submit separate report for each test, complete with diagram of portion of piping tested.

2. Leave uncovered and unconcealed new, altered, extended, or replaced storm drainage piping until it has been tested and approved.

    a. Expose work that was covered or concealed before it was tested.

3. Test Procedure:

    a. Test storm drainage piping, except outside leaders, on completion of roughing-in.
    b. Close openings in piping system and fill with water to point of overflow, but not less than 10-foot head of water. From 15 minutes before inspection starts until completion of inspection, water level must not drop. Inspect joints for leaks.

4. Repair leaks and defects with new materials and retest piping, or portion thereof, until satisfactory results are obtained.
5. Prepare reports for tests and required corrective action.

C. Test force-main piping according to procedures of authorities having jurisdiction or, in absence of published procedures, as follows:

1. Leave uncovered and unconcealed new, altered, extended, or replaced force-main piping until it has been tested and approved.

    a. Expose work that was covered or concealed before it was tested.

2. Cap and subject piping to static-water pressure of 50 psig above operating pressure, without exceeding pressure rating of piping system materials.

    a. Isolate test source and allow to stand for four hours. Leaks and loss in test pressure constitute defects that must be repaired.

3. Repair leaks and defects with new materials and retest piping, or portion thereof, until satisfactory results are obtained.
4. Prepare reports for tests and required corrective action.

D. Piping will be considered defective if it does not pass tests and inspections.

E. Prepare test and inspection reports.

3.10 CLEANING AND PROTECTION

A. Clean interior of piping. Remove dirt and debris as work progresses.

B. Protect drains during remainder of construction period to avoid clogging with dirt and debris and to prevent damage from traffic and construction work.

C. Place plugs in ends of uncompleted piping at end of day and when work stops.

3.11 PIPING SCHEDULE

A. Flanges and unions may be used on aboveground pressure piping unless otherwise indicated.

B. Aboveground storm drainage piping shall be the following:

1. Hubless, cast-iron soil pipe and fittings; CISPI, heavy duty hubless-piping couplings; and coupled joints.

C. Underground storm drainage piping shall be the following:

1. Service class, cast-iron soil pipe and fittings; gaskets; and gasketed joints.

END OF SECTION 221413

SECTION 230713 - DUCT INSULATION

PART 1 - GENERAL

1.1 SUMMARY

A. Section includes insulating the following duct services:

1. Indoor, concealed supply and outdoor air.
2. Indoor, exposed supply and outdoor air.

B. Related Requirements:

1. Section 230716 "HVAC Equipment Insulation."
2. Section 230719 "HVAC Piping Insulation."
3. Section 233113 "Metal Ducts" for duct liners.

1.2 ACTION SUBMITTALS

A. Product Data: For each type of product indicated. Include thermal conductivity, water-vapor permeance thickness, and jackets (both factory- and field-applied if any).

1.3 QUALITY ASSURANCE

A. Installer Qualifications: Skilled mechanics who have successfully completed an apprenticeship program or craft training program, certified by the Department of Labor, Bureau of Apprenticeship and Training.

1.4 DELIVERY, STORAGE, AND HANDLING

A. Packaging: Insulation material containers are to be marked with the manufacturer's name, appropriate ASTM standard designation, type and grade, and maximum use temperature.

1.5 COORDINATION

A. Coordinate sizes and locations of supports, hangers, and insulation shields specified in Section 230529 "Hangers and Supports for HVAC Piping and Equipment."

B. Coordinate clearance requirements with duct Installer for duct insulation application. Before preparing ductwork Shop Drawings, establish and maintain clearance requirements for installation of insulation and field-applied jackets and finishes and for space required for maintenance.

C. Coordinate installation and testing of heat tracing.

1.6 SCHEDULING

A. Schedule insulation application after pressure testing systems and, where required, after installing and testing heat tracing. Insulation application may begin on segments that have satisfactory test results.

PART 2 - PRODUCTS

2.1 INSULATION MATERIALS

A. Comply with requirements in "Duct Insulation Schedule, General," "Indoor Duct and Plenum Insulation Schedule," and "Aboveground, Outdoor Duct and Plenum Insulation Schedule" articles for where insulating materials are to be applied.

B. Products do not contain asbestos, lead, mercury, or mercury compounds.

C. Products that come in contact with stainless steel have a leachable chloride content of less than 50 ppm when tested in accordance with ASTM C871.

D. Insulation materials for use on austenitic stainless steel are qualified as acceptable in accordance with ASTM C795.

E. Foam insulation materials do not use CFC or HCFC blowing agents in the manufacturing process.

F. Flexible Elastomeric: Closed-cell or expanded-rubber materials; suitable for maximum use temperature between minus 70 deg F and 220 deg F. Comply with ASTM C534, Type II for sheet materials.

1. Manufacturers: Subject to compliance with requirements, provide products by one of the following:

a. Aeroflex USA.
b. Armacell LLC.
c. K-Flex USA.

G. Glass-Fiber Blanket: Glass fibers bonded with a thermosetting resin; suitable for maximum use temperature up to 450 deg F in accordance with ASTM C411. Comply with ASTM C553, Type II, and ASTM C1290, Type III with factory-applied FSK jacket. Factory-applied jacket requirements are specified in "Factory-Applied Jackets" Article.

1. Manufacturers: Subject to compliance with requirements, provide products by one of the following:

a. Certainteed; SAINT-GOBAIN.
b. Johns Manville; a Berkshire Hathaway company.
c. Knauf Insulation.
d. Manson Insulation Inc.
e. Owens Corning.

H. Glass-Fiber Board Insulation: Glass fibers bonded with a thermosetting resin; suitable for maximum use temperature between 35 deg F and 250 deg F for jacketed and between 35 deg F and 450 deg F for unfaced in accordance with ASTM C411. Comply with ASTM C612, Type IA or Type IB. For duct and plenum applications, provide insulation with factory-applied FSK jacket. Factory-applied jacket requirements are specified in "Factory-Applied Jackets" Article.

1. Manufacturers: Subject to compliance with requirements, provide products by one of the following:

a. Certainteed; SAINT-GOBAIN.
b. Johns Manville; a Berkshire Hathaway company.
c. Knauf Insulation.
d. Manson Insulation Inc.
e. Owens Corning.

I. Glass-Fiber, Pipe and Tank: Glass fibers bonded with a thermosetting resin; suitable for maximum use temperature between 35 deg F and 850 deg F, in accordance with ASTM C411. Comply with ASTM C1393.

1. Manufacturers: Subject to compliance with requirements, provide products by one of the following:

a. Certainteed; SAINT-GOBAIN.
b. Johns Manville; a Berkshire Hathaway company.
c. Knauf Insulation.
d. Manson Insulation Inc.
e. Owens Corning.

2. Semirigid board material with factory-applied ASJ jacket.
3. Factory-applied jacket requirements are specified in "Factory-Applied Jackets" Article.

2.2 ADHESIVES

A. Materials are compatible with insulation materials, jackets, and substrates and for bonding insulation to itself and to surfaces to be insulated unless otherwise indicated.

B. Glass-Fiber and Mineral Wool Adhesive: Comply with MIL-A-3316C, Class 2, Grade A.

1. Manufacturers: Subject to compliance with requirements, provide products by one of the following:

a. Childers Brand; H. B. Fuller Construction Products.
b. Foster Brand; H. B. Fuller Construction Products.

C. FSK Jacket Adhesive: Comply with MIL-A-3316C, Class 2, Grade A for bonding insulation jacket lap seams and joints.

2.3 MASTICS AND COATINGS

A. Materials are compatible with insulation materials, jackets, and substrates.

B. Vapor-Retarder Mastic, Water Based, Interior Use: Suitable for indoor use on below ambient services.

1. Manufacturers: Subject to compliance with requirements, provide products by one of the following:

a. Childers Brand; H. B. Fuller Construction Products.
b. Foster Brand; H. B. Fuller Construction Products.
c. Knauf Insulation.
d. Vimasco Corporation.

2. Water-Vapor Permeance: Comply with ASTM C755, Section 7.2.2, Table 2, for insulation type and service conditions.
3. Service Temperature Range: Minus 20 to plus 180 deg F.
4. Comply with MIL-PRF-19565C, Type II, for permeance requirements.
5. Color: White.

2.4 LAGGING ADHESIVES

A. Description: Comply with MIL-A-3316C, Class I, Grade A and are compatible with insulation materials, jackets, and substrates.

1. Fire-resistant, water-based lagging adhesive and coating for use indoors to adhere fire-resistant lagging cloths over duct insulation.
2. Service Temperature Range: 0 to plus 180 deg F.
3. Color: White.

2.5 SEALANTS

A. FSK and Metal Jacket Flashing Sealants:

1. Materials are compatible with insulation materials, jackets, and substrates.
2. Fire- and water-resistant, flexible, elastomeric sealant.
3. Service Temperature Range: Minus 40 to plus 250 deg F.
4. Color: Aluminum.

2.6 FACTORY-APPLIED JACKETS

A. Insulation system schedules indicate factory-applied jackets on various applications. When factory-applied jackets are indicated, comply with the following:

1. FSK Jacket: Aluminum-foil, fiberglass-reinforced scrim with kraft-paper backing; complying with ASTM C1136, Type II.

2.7 FIELD-APPLIED FABRIC-REINFORCING MESH

A. Woven Glass-Fiber Mesh: Approximately 6 oz./sq. yd. with a thread count of 5 strands by 5 strands/sq. in. for covering ducts.

1. Manufacturers: Subject to compliance with requirements, provide products by one of the following:

a. Childers Brand; H. B. Fuller Construction Products.
b. Foster Brand; H. B. Fuller Construction Products.

2.8 TAPES

A. FSK Tape: Foil-face, vapor-retarder tape matching factory-applied jacket with acrylic adhesive; complying with ASTM C1136.

1. Manufacturers: Subject to compliance with requirements, provide products by one of the following:

a. 3M Industrial Adhesives and Tapes Division.
b. Avery Dennison Corporation, Specialty Tapes Division.
c. Knauf Insulation.

2. Width: 3 inches.
3. Thickness: 6.5 mils.
4. Adhesion: 90 ounces force/inch in width.

5. Elongation: 2 percent.
6. Tensile Strength: 40 lbf/inch in width.
7. FSK Tape Disks and Squares: Precut disks or squares of FSK tape.

2.9 SECUREMENTS

A. Insulation Pins and Hangers:

1. Capacitor-Discharge-Weld Pins: Copper- or zinc-coated steel pin, fully annealed for capacitor-discharge welding, 0.106-inch- diameter shank, length to suit depth of insulation indicated.
2. Cupped-Head, Capacitor-Discharge-Weld Pins: Copper- or zinc-coated steel pin, fully annealed for capacitor-discharge welding, 0.106-inch- diameter shank, length to suit depth of insulation indicated with integral 1-1/2-inch galvanized carbon-steel washer.
3. Metal, Adhesively Attached, Perforated-Base Insulation Hangers: Baseplate welded to projecting spindle that is capable of holding insulation, of thickness indicated, securely in position indicated when self-locking washer is in place. Comply with the following requirements:

    a. Baseplate: Perforated, galvanized carbon-steel sheet, 0.030 inch thick by 2 inches square.
    b. Spindle: Copper- or zinc-coated, low-carbon steel , fully annealed, 0.106-inch- diameter shank, length to suit depth of insulation indicated.
    c. Adhesive: Recommended by hanger manufacturer. Product with demonstrated capability to bond insulation hanger securely to substrates indicated without damaging insulation, hangers, and substrates.

4. Nonmetal, Adhesively Attached, Perforated-Base Insulation Hangers: Baseplate fastened to projecting spindle that is capable of holding insulation, of thickness indicated, securely in position indicated when self-locking washer is in place. Comply with the following requirements:

    a. Baseplate: Perforated, nylon sheet, 0.030 inch thick by 1-1/2 inches in diameter.
    b. Spindle: Nylon, 0.106-inch- diameter shank, length to suit depth of insulation indicated, up to 2-1/2 inches.
    c. Adhesive: Recommended by hanger manufacturer. Product with demonstrated capability to bond insulation hanger securely to substrates indicated without damaging insulation, hangers, and substrates.

5. Self-Sticking-Base Insulation Hangers: Baseplate welded to projecting spindle that is capable of holding insulation, of thickness indicated, securely in position indicated when self-locking washer is in place. Comply with the following requirements:

    a. Baseplate: Galvanized carbon-steel sheet, 0.030 inch thick by 2 inches square.
    b. Spindle: Copper- or zinc-coated, low-carbon steel , fully annealed, 0.106-inch- diameter shank, length to suit depth of insulation indicated.
    c. Adhesive-backed base with a peel-off protective cover.

6. Insulation-Retaining Washers: Self-locking washers formed from 0.016-inch- thick, galvanized-steel sheet, with beveled edge sized as required to hold insulation securely in place but not less than 1-1/2 inches in diameter.

    a. Protect ends with capped self-locking washers incorporating a spring steel insert to ensure permanent retention of cap in exposed locations.

7. Nonmetal Insulation-Retaining Washers: Self-locking washers formed from 0.016-inch- thick nylon sheet, with beveled edge sized as required to hold insulation securely in place but not less than 1-1/2 inches in diameter.

B. Wire: 0.062-inch soft-annealed, galvanized steel.

PART 3 - EXECUTION

3.1 EXAMINATION

A. Examine substrates and conditions for compliance with requirements for installation tolerances and other conditions affecting performance of insulation application.

1. Verify that systems to be insulated have been tested and are free of defects.
2. Verify that surfaces to be insulated are clean and dry.

B. Proceed with installation only after unsatisfactory conditions have been corrected.

3.2 PREPARATION

A. Surface Preparation: Clean and dry surfaces to receive insulation. Remove materials that will adversely affect insulation application.

3.3 GENERAL INSTALLATION REQUIREMENTS

A. Install insulation materials, accessories, and finishes with smooth, straight, and even surfaces; free of voids throughout the length of ducts and fittings.

B. Install insulation materials, vapor barriers or retarders, jackets, and thicknesses required for each item of duct system as specified in insulation system schedules.

C. Install accessories compatible with insulation materials and suitable for the service. Install accessories that do not corrode, compress, or otherwise damage insulation or jacket.

D. Install insulation with longitudinal seams at top and bottom of horizontal runs.

E. Install multiple layers of insulation with longitudinal and end seams staggered.

F. Keep insulation materials dry during application and finishing. Replace insulation materials that get wet during storage or in the installation process before being properly covered and sealed in accordance with Contract Documents.

G. Install insulation with tight longitudinal seams and end joints. Bond seams and joints with adhesive recommended by insulation material manufacturer.

H. Install insulation with least number of joints practical.

I. Where vapor barrier is indicated, seal joints, seams, and penetrations in insulation at hangers, supports, anchors, and other projections with vapor-barrier mastic.

1. Install insulation continuously through hangers and around anchor attachments.
2. For insulation application where vapor barriers are indicated, extend insulation on anchor legs from point of attachment to supported item to point of attachment to structure. Taper and seal ends at attachment to structure with vapor-barrier mastic.

3. Install insert materials and install insulation to tightly join the insert. Seal insulation to insulation inserts with adhesive or sealing compound recommended by insulation material manufacturer.

J. Apply adhesives, mastics, and sealants at manufacturer's recommended coverage rate and wet and dry film thicknesses.

K. Install insulation with factory-applied jackets as follows:

1. Draw jacket tight and smooth, but not to the extent of creating wrinkles or areas of compression in the insulation.
2. Cover circumferential joints with 3-inch-wide strips, of same material as insulation jacket. Secure strips with adhesive and outward clinching staples along both edges of strip, spaced 4 inches o.c.
3. Overlap jacket longitudinal seams at least 1-1/2 inches. Clean and dry surface to receive self-sealing lap. Staple laps with outward clinching staples along edge at 4 inches o.c.

    a. For below ambient services, apply vapor-barrier mastic over staples.

4. Cover joints and seams with tape, according to insulation material manufacturer's written instructions, to maintain vapor seal.
5. Where vapor barriers are indicated, apply vapor-barrier mastic on seams and joints and at ends adjacent to duct flanges and fittings.

L. Cut insulation in a manner to avoid compressing insulation.

M. Finish installation with systems at operating conditions. Repair joint separations and cracking due to thermal movement.

N. Repair damaged insulation facings by applying same facing material over damaged areas. Extend patches at least 4 inches beyond damaged areas. Adhere, staple, and seal patches similar to butt joints.

3.4 INSTALLATION OF FLEXIBLE ELASTOMERIC AND POLYOLEFIN INSULATION

A. Comply with manufacturer's written installation instructions and ASTM C1710.

B. Seal longitudinal seams and end joints with manufacturer's recommended adhesive to eliminate openings in insulation that allow passage of air to surface being insulated.

C. Square and Rectangular Ducts and Plenums:

1. Provide 1/4 inch more per side for a tight, compression fit.
2. Cut sheet insulation with the following dimensions:

    a. Width of duct plus 1/4 inch, one piece.
    b. Height of duct plus 1/4 inch, plus thickness of insulation, two pieces.
    c. Width of duct plus 1/4 inch, plus two times the thickness of insulation, one piece.

3. Insulate the bottom of the duct with the sheet from (a) above, then the sides with the two sheets from (b) above, and finally the top of the duct with the sheet from (c) above.
4. Insulation without self-adhering backing:

    a. Apply 100 percent coverage of manufacturer adhesive on the metal surface, then the insulation, except for the last 1/4 inch where sheets will butt together.
    b. Roll sheet down into position.

c. Press two sheets together under compression and apply adhesive at the butt joint to seal the two sheets together.

5. Insulation with self-adhering backing:

a. Peel back release paper in 6- to 8-inch increments and line up sheet.
b. Press firmly to activate adhesive.
c. Align material and continue to line up correctly, pressing firmly while slowly removing release paper.
d. Allow 1/4-inch overlap for compression at butt joints.
e. Apply adhesive at the butt joint to seal the two sheets together.

6. Insulate duct brackets following manufacturer's written installation instructions.

D. Circular Ducts:

1. Determine the circumference of the duct, using a strip of insulation the same thickness as to be used.
2. Cut the sheet to the required size.
3. Apply 100 percent coverage of manufacturer adhesive on the metal surface then the insulation.
4. Apply manufacturer adhesive to the cut surfaces along 100 percent of the longitudinal seam. Press together the seam at the ends and then the middle. Close the entire seam starting from the middle.

3.5 INSTALLATION OF GLASS-FIBER AND MINERAL-WOOL INSULATION

A. Blanket Insulation Installation on Ducts and Plenums: Secure with adhesive and insulation pins.

B. Comply with manufacturer's written installation instructions.

1. Apply adhesives according to manufacturer's recommended coverage rates per unit area, for 50 percent coverage of duct and plenum surfaces.
2. Apply adhesive to entire circumference of ducts and to all surfaces of fittings and transitions.
3. Install either capacitor-discharge-weld pins and speed washers or cupped-head, capacitor-discharge-weld pins on sides and bottom of horizontal ducts and sides of vertical ducts as follows:

a. On duct sides with dimensions 18 inches and smaller, place pins along longitudinal centerline of duct. Space 3 inches maximum from insulation end joints, and 16 inches o.c.
b. On duct sides with dimensions larger than 18 inches, place pins 12 inches o.c. each way, and 3 inches maximum from insulation joints. Install additional pins to hold insulation tightly against surface at cross bracing.
c. Pins may be omitted from top surface of horizontal, rectangular ducts and plenums.
d. Do not overcompress insulation during installation.
e. Impale insulation over pins and attach speed washers.
f. Cut excess portion of pins extending beyond speed washers or bend parallel with insulation surface. Cover exposed pins and washers with tape matching insulation facing.

4. For ducts and plenums with surface temperatures below ambient, install a continuous unbroken vapor barrier. Create a facing lap for longitudinal seams and end joints with insulation by removing 2 inches from one edge and one end of insulation segment. Secure laps to adjacent insulation section with 1/2-inch outward-clinching staples, 1 inch o.c. Install vapor barrier consisting of factory- or field-applied jacket, adhesive, vapor-barrier mastic, and sealant at joints, seams, and protrusions.

a. Repair punctures, tears, and penetrations with tape or mastic to maintain vapor-barrier seal.
b. Install vapor stops for ductwork and plenums operating below 50 deg F at 18-foot intervals. Vapor stops consist of vapor-barrier mastic applied in a Z-shaped pattern over insulation

face, along butt end of insulation, and over the surface. Cover insulation face and surface to be insulated a width equal to two times the insulation thickness, but not less than 3 inches.

5. Overlap unfaced blankets a minimum of 2 inches on longitudinal seams and end joints. At end joints, secure with steel bands spaced a maximum of 18 inches o.c.
6. Install insulation on rectangular duct elbows and transitions with a full insulation section for each surface. Install insulation on round and flat-oval duct elbows with individually mitered gores cut to fit the elbow.
7. Insulate duct stiffeners, hangers, and flanges that protrude beyond insulation surface with 6-inch-wide strips of same material used to insulate duct. Secure on alternating sides of stiffener, hanger, and flange with pins spaced 6 inches o.c.

C. Board Insulation Installation on Ducts and Plenums: Secure with adhesive and insulation pins.

1. Apply adhesives according to manufacturer's recommended coverage rates per unit area, for 50 percent coverage of duct and plenum surfaces.
2. Apply adhesive to entire circumference of ducts and to all surfaces of fittings and transitions.
3. Install either capacitor-discharge-weld pins and speed washers or cupped-head, capacitor-discharge-weld pins on sides and bottom of horizontal ducts and sides of vertical ducts as follows:

    a. On duct sides with dimensions 18 inches and smaller, place pins along longitudinal centerline of duct. Space 3 inches maximum from insulation end joints, and 16 inches o.c.
    b. On duct sides with dimensions larger than 18 inches, space pins 16 inches o.c. each way, and 3 inches maximum from insulation joints. Install additional pins to hold insulation tightly against surface at cross bracing.
    c. Pins may be omitted from top surface of horizontal, rectangular ducts and plenums.
    d. Do not overcompress insulation during installation.
    e. Cut excess portion of pins extending beyond speed washers or bend parallel with insulation surface. Cover exposed pins and washers with tape matching insulation facing.

4. For ducts and plenums with surface temperatures below ambient, install a continuous unbroken vapor barrier. Create a facing lap for longitudinal seams and end joints with insulation by removing 2 inches from one edge and one end of insulation segment. Secure laps to adjacent insulation section with 1/2-inch outward-clinching staples, 1 inch o.c. Install vapor barrier consisting of factory- or field-applied jacket, adhesive, vapor-barrier mastic, and sealant at joints, seams, and protrusions.

    a. Repair punctures, tears, and penetrations with tape or mastic to maintain vapor-barrier seal.
    b. Install vapor stops for ductwork and plenums operating below 50 deg F at 18-foot intervals. Vapor stops consist of vapor-barrier mastic applied in a Z-shaped pattern over insulation face, along butt end of insulation, and over the surface. Cover insulation face and surface to be insulated a width equal to two times the insulation thickness, but not less than 3 inches.

5. Install insulation on rectangular duct elbows and transitions with a full insulation section for each surface. Groove and score insulation to fit as closely as possible to outside and inside radius of elbows. Install insulation on round and flat-oval duct elbows with individually mitered gores cut to fit the elbow.
6. Insulate duct stiffeners, hangers, and flanges that protrude beyond insulation surface with 6-inch-wide strips of same material used to insulate duct. Secure on alternating sides of stiffener, hanger, and flange with pins spaced 6 inches o.c.

3.6 FIELD-APPLIED JACKET INSTALLATION

A. Where glass-cloth jackets are indicated, install directly over bare insulation or insulation with factory-applied jackets.

1. Draw jacket smooth and tight to surface with 2-inch overlap at seams and joints.
2. Embed glass cloth between two 0.062-inch- thick coats of lagging adhesive.
3. Completely encapsulate insulation with coating, leaving no exposed insulation.

B. Where FSK jackets are indicated, install as follows:

1. Draw jacket material smooth and tight.
2. Install lap or joint strips with same material as jacket.
3. Secure jacket to insulation with manufacturer's recommended adhesive.
4. Install jacket with 1-1/2-inch laps at longitudinal seams and 3-inch- wide joint strips at end joints.
5. Seal openings, punctures, and breaks in vapor-retarder jackets and exposed insulation with vapor-barrier mastic.

C. Where PVC jackets are indicated, install with 1-inch overlap at longitudinal seams and end joints; for horizontal applications, install with longitudinal seams along top and bottom of tanks and vessels. Seal with manufacturer's recommended adhesive.

1. Apply two continuous beads of adhesive to seams and joints, one bead under lap and the finish bead along seam and joint edge.

D. Where metal jackets are indicated, install with 2-inch overlap at longitudinal seams and end joints. Overlap longitudinal seams arranged to shed water. Seal end joints with weatherproof sealant recommended by insulation manufacturer. Secure jacket with stainless steel bands 12 inches o.c. and at end joints.

3.7 FINISHES

A. Insulation with ASJ, Glass-Cloth, or Other Paintable Jacket Material: Paint jacket with paint system identified below and as specified in Section 099113 "Exterior Painting" and Section 099123 "Interior Painting."

1. Flat Acrylic Finish: Two finish coats over a primer that is compatible with jacket material and finish coat paint. Add fungicidal agent to render fabric mildew proof.

a. Finish Coat Material: Interior, flat, latex-emulsion size.

B. Flexible Elastomeric Thermal Insulation: After adhesive has fully cured, apply two coats of insulation manufacturer's recommended protective coating.

C. Color: Final color as selected by Architect. Vary first and second coats to allow visual inspection of the completed Work.

D. Do not field paint aluminum or stainless steel jackets.

3.8 DUCT INSULATION SCHEDULE, GENERAL

A. Plenums and Ducts Requiring Insulation:

1. Indoor, concealed supply and outdoor air.

2. Indoor, exposed supply and outdoor air.

B. Items Not Insulated:

1. Metal ducts with duct liner of sufficient thickness to comply with energy code and ASHRAE/IESNA 90.1.
2. Factory-insulated flexible ducts.
3. Factory-insulated plenums and casings.
4. Flexible connectors.
5. Factory-insulated access panels and doors.

3.9 INDOOR DUCT AND PLENUM INSULATION SCHEDULE

A. Concealed, round and flat-oval, supply-air duct insulation is the following:

1. Glass-Fiber Blanket: 2 inches thick and ~~3~~ **1.0** lb/cu. ft. nominal density.

B. Concealed, rectangular, supply-air duct insulation is the following:

1. Glass-Fiber Blanket: 2 inches thick and ~~3~~ **1.0** lb/cu. ft. nominal density.

C. Exposed, round and flat-oval, supply-air duct insulation is one of the following:

1. Glass-Fiber Pipe and Tank: 2 inches thick.

D. Exposed, rectangular, supply-air duct insulation is one of the following:

1. Glass-Fiber Board: 2 inches thick and 3 lb/cu. ft. nominal density.

3.10 ABOVEGROUND, OUTDOOR DUCT AND PLENUM INSULATION SCHEDULE

A. Insulation materials and thicknesses are identified below. If more than one material is listed for a duct system, selection from materials listed is Contractor's option.

END OF SECTION 230713

SECTION 230719 - HVAC PIPING INSULATION

PART 1 - GENERAL

1.1 SUMMARY

A. Section includes insulation for HVAC piping systems.

B. Related Requirements:

1. Section 230713 "Duct Insulation" for duct insulation.
2. Section 230716 "HVAC Equipment Insulation" for equipment insulation.
3. Section 232113.13 "Underground Hydronic Piping" loose-fill pipe insulation in underground piping outside the building.
4. Section 232213.13 "Underground Steam and Condensate Heating Piping" for steam and condensate piping for steam-type tank heaters.

1.2 ACTION SUBMITTALS

A. Product Data: For each type of product. Include thermal conductivity, water-vapor permeance thickness, and jackets (both factory and field applied, if any).

1.3 DELIVERY, STORAGE, AND HANDLING

A. Packaging: Insulation system materials are to be delivered to the Project site in unopened containers. The packaging is to include name of manufacturer, fabricator, type, description, and size , as well as ASTM standard designation, and maximum use temperature.

1.4 COORDINATION

A. Coordinate sizes and locations of supports, hangers, and insulation shields specified in Section 230529 "Hangers and Supports for HVAC Piping and Equipment."

B. Coordinate clearance requirements with piping Installer for piping insulation application. Before preparing piping Shop Drawings, establish and maintain clearance requirements for installation of insulation and field-applied jackets and finishes and for space required for maintenance.

C. Coordinate installation and testing of heat tracing.

1.5 SCHEDULING

A. Schedule insulation application after pressure testing systems and, where required, after installing and testing heat tracing. Insulation application may begin on segments that have satisfactory test results.

PART 2 - PRODUCTS

2.1 PERFORMANCE REQUIREMENTS

A. Surface-Burning Characteristics: For insulation and related materials, as determined by testing identical products in accordance with ASTM E84 by a testing agency acceptable to authorities having jurisdiction. Factory label insulation, jacket materials, adhesive, mastic, tapes, and cement material containers with appropriate markings of applicable testing agency.

1. All Insulation Installed Indoors and Outdoors: Flame-spread index of 25 or less, and smoke-developed index of 50 or less.

2.2 INSULATION MATERIALS

A. Comply with requirements in "Piping Insulation Schedule, General," "Indoor Piping Insulation Schedule," "Outdoor, Aboveground Piping Insulation Schedule," and "Outdoor, Underground Piping Insulation Schedule" articles for where insulating materials are applied.

B. Products do not contain asbestos, lead, mercury, or mercury compounds.

C. Products that come into contact with stainless steel have a leachable chloride content of less than 50 ppm when tested in accordance with ASTM C871.

D. Insulation materials for use on austenitic stainless steel are qualified as acceptable in accordance with ASTM C795.

E. Foam insulation materials do not use CFC or HCFC blowing agents in the manufacturing process.

F. Cellular Glass: Inorganic, incombustible, foamed or cellulated glass with annealed, rigid, hermetically sealed cells. Comply with ASTM C552.

1. Manufacturers: Subject to compliance with requirements, provide products by the following:

a. Owens Corning.

2. Preformed Pipe Insulation with Jacket: Type II, Class 2, with factory-applied ASJ-SSL jacket.
3. Fabricated shapes in accordance with ASTM C450, ASTM C585, and ASTM C1639.
4. Factory-applied jacket requirements are specified in "Factory-Applied Jackets" Article.

G. Flexible Elastomeric: Closed-cell or expanded-rubber materials; suitable for maximum use temperature between minus 70 deg F and 220 deg F. Comply with ASTM C534/C534M, Type I for tubular materials, Type II for sheet materials.

1. Manufacturers: Subject to compliance with requirements, provide products by one of the following:

a. Aeroflex USA.
b. Armacell LLC.
c. K-Flex USA.

H. Glass-Fiber, Preformed Pipe: Glass fibers bonded with a thermosetting resin; suitable for maximum use temperature up to 850 deg F in accordance with ASTM C411. Comply with ASTM C547.

1. Manufacturers: Subject to compliance with requirements, provide products by one of the following:

a. Johns Manville; a Berkshire Hathaway company.
b. Knauf Insulation.
c. Manson Insulation Inc.
d. Owens Corning.

2. Preformed Pipe Insulation: Type I, Grade A with factory-applied ASJ-SSL.
3. Fabricated shapes in accordance with ASTM C450 and ASTM C585.
4. Factory-applied jacket requirements are specified in "Factory-Applied Jackets" Article.

I. Glass-Fiber, Pipe and Tank: Glass fibers bonded with a thermosetting resin; suitable for maximum use temperature between 35 deg F and 850 deg F, in accordance with ASTM C411. Comply with ASTM C1393.

1. Manufacturers: Subject to compliance with requirements, provide products by one of the following:

a. Certainteed; SAINT-GOBAIN.
b. Johns Manville; a Berkshire Hathaway company.
c. Knauf Insulation.
d. Manson Insulation Inc.
e. Owens Corning.

2. Semirigid board material with factory-applied FSK jacket.
3. Factory-applied jacket requirements are specified in "Factory-Applied Jackets" Article.

2.3 INSULATING CEMENTS

A. Glass-Fiber and Mineral Wool Insulating Cement: Comply with ASTM C195.

1. Manufacturers: Subject to compliance with requirements, provide products by the following:

a. Ramco Insulation, Inc.

B. Glass-Fiber and Mineral Wool Hydraulic-Setting Insulating and Finishing Cement: Comply with ASTM C449.

1. Manufacturers: Subject to compliance with requirements, provide products by the following:

a. Ramco Insulation, Inc.

2.4 ADHESIVES

A. Materials are compatible with insulation materials, jackets, and substrates and for bonding insulation to itself and to surfaces to be insulated unless otherwise indicated.

B. Cellular-Glass Adhesive: Two-component, thermosetting urethane adhesive containing no flammable solvents, with a service temperature range of minus 100 to plus 200 deg F.

1. Manufacturers: Subject to compliance with requirements, provide products by the following:

a. Foster Brand; H. B. Fuller Construction Products.

C. Phenolic and Polyisocyanurate Adhesive: Solvent-based resin adhesive, with a service temperature range of minus 75 to plus 300 deg F.

1. Manufacturers: Subject to compliance with requirements, provide products by one of the following:

a. Childers Brand; H. B. Fuller Construction Products.
b. Foster Brand; H. B. Fuller Construction Products.

D. Flexible Elastomeric and Polyolefin Adhesive: Solvent-based adhesive.

1. Manufacturers: Subject to compliance with requirements, provide products by one of the following:

a. Aeroflex USA.
b. Armacell LLC.
c. K-Flex USA.

2. Flame-spread index is 25 or less and smoke-developed index is 50 or less as tested in accordance with ASTM E84.
3. Wet Flash Point: Below 0 deg F.
4. Service Temperature Range: 40 to 200 deg F.
5. Color: Black.

E. Glass-Fiber and Mineral Wool Adhesive: Comply with MIL-A-3316C, Class 2, Grade A.

1. Manufacturers: Subject to compliance with requirements, provide products by one of the following:

a. Childers Brand; H. B. Fuller Construction Products.
b. Foster Brand; H. B. Fuller Construction Products.

F. ASJ Adhesive and FSK and PVDC Jacket Adhesive: Comply with MIL-A-3316C, Class 2, Grade A, for bonding insulation jacket lap seams and joints.

1. Manufacturers: Subject to compliance with requirements, provide products by one of the following:

a. Childers Brand; H. B. Fuller Construction Products.
b. Foster Brand; H. B. Fuller Construction Products.

G. PVC Jacket Adhesive: Compatible with PVC jacket.

1. Manufacturers: Subject to compliance with requirements, provide products by one of the following:

a. Johns Manville; a Berkshire Hathaway company.
b. Proto Corporation.
c. Speedline Corporation.
d. The Dow Chemical Company.

2.5 MASTICS AND COATINGS

A. Materials are compatible with insulation materials, jackets, and substrates.

B. Vapor-Retarder Mastic, Water Based: Suitable for indoor use on below-ambient services.

1. Manufacturers: Subject to compliance with requirements, provide products by one of the following:

a. Childers Brand; H. B. Fuller Construction Products.
b. Foster Brand; H. B. Fuller Construction Products.
c. Knauf Insulation.
d. Vimasco Corporation.

2. Water-Vapor Permeance: Comply with ASTM E96/E96M or ASTM F1249.
3. Service Temperature Range: Minus 20 to plus 180 deg F.
4. Comply with MIL-PRF-19565C, Type II, for permeance requirements.
5. Color: White.

C. Vapor-Retarder Mastic, Solvent Based, Outdoor Use: Suitable for outdoor use on below-ambient services.

1. Manufacturers: Subject to compliance with requirements, provide products by one of the following:

a. Childers Brand; H. B. Fuller Construction Products.
b. Foster Brand; H. B. Fuller Construction Products.

2. Water-Vapor Permeance: Comply with ASTM E96/E96M or ASTM F1249.
3. Service Temperature Range: Minus 50 to plus 220 deg F.
4. Color: White.

D. Breather Mastic: Water based; suitable for indoor and outdoor use on above-ambient services.

1. Manufacturers: Subject to compliance with requirements, provide products by one of the following:

a. Childers Brand; H. B. Fuller Construction Products.
b. Foster Brand; H. B. Fuller Construction Products.
c. Knauf Insulation.
d. Vimasco Corporation.

2. Water-Vapor Permeance: ASTM E96/E96M, greater than 1.0 perm at manufacturer's recommended dry film thickness.
3. Service Temperature Range: Minus 20 to plus 180 deg F.
4. Color: White.

2.6 LAGGING ADHESIVES

A. Adhesives comply with MIL-A-3316C, Class I, Grade A, and are compatible with insulation materials, jackets, and substrates.

1. Manufacturers: Subject to compliance with requirements, provide products by one of the following:

a. Childers Brand; H. B. Fuller Construction Products.
b. Foster Brand; H. B. Fuller Construction Products.
c. Vimasco Corporation.

2. Fire-resistant, water-based lagging adhesive and coating for use indoors to adhere fire-resistant lagging cloths over pipe insulation.
3. Service Temperature Range: 0 to plus 180 deg F.
4. Color: White.

2.7 SEALANTS

A. Materials are as recommended by the insulation manufacturer and are compatible with insulation materials, jackets, and substrates.

B. Joint Sealants:

1. Manufacturers: Subject to compliance with requirements, provide products by one of the following:

a. Childers Brand; H. B. Fuller Construction Products.
b. Foster Brand; H. B. Fuller Construction Products.
c. Owens Corning.

2. Permanently flexible, elastomeric sealant.

a. Service Temperature Range: Minus 100 to plus 300 deg F.
b. Color: White or gray.

C. ASJ Flashing Sealants and PVDC and PVC Jacket Flashing Sealants:

1. Manufacturers: Subject to compliance with requirements, provide products by one of the following:

a. Childers Brand; H. B. Fuller Construction Products.
b. Foster Brand; H. B. Fuller Construction Products.

2. Fire- and water-resistant, flexible, elastomeric sealant.
3. Service Temperature Range: Minus 40 to plus 250 deg F.
4. Color: White.

2.8 FACTORY-APPLIED JACKETS

A. Insulation system schedules indicate factory-applied jackets on various applications. When factory-applied jackets are indicated, comply with the following:

1. ASJ-SSL: ASJ with self-sealing, pressure-sensitive, acrylic-based adhesive covered by a removable protective strip; complying with ASTM C1136, Type I.

2.9 FIELD-APPLIED JACKETS

A. Field-applied jackets comply with ASTM C1136, Type I, unless otherwise indicated.

B. PVC Jacket: High-impact-resistant, UV-resistant PVC complying with ASTM D1784, Class 16354-C; thickness as scheduled; roll stock ready for shop or field cutting and forming. Thickness is indicated in field-applied jacket schedules.

1. Manufacturers: Subject to compliance with requirements, provide products by one of the following:

a. Airex Manufacturing Inc.
b. Johns Manville; a Berkshire Hathaway company.
c. Proto Corporation.
d. Speedline Corporation.

2. Adhesive: As recommended by jacket material manufacturer.
3. Color: White.
4. Factory-fabricated fitting covers to match jacket if available; otherwise, field fabricate.

a. Shapes: 45- and 90-degree, short- and long-radius elbows, tees, valves, flanges, unions, reducers, end caps, soil-pipe hubs, traps, mechanical joints, and P-trap and supply covers for lavatories.

C. Metal Jacket:

1. Manufacturers: Subject to compliance with requirements, provide products by the following:

a. Johns Manville; a Berkshire Hathaway company.

PART 3 - EXECUTION

3.1 EXAMINATION

A. Examine substrates and conditions for compliance with requirements for installation tolerances and other conditions affecting performance of insulation application.

1. Verify that systems to be insulated have been tested and are free of defects.
2. Verify that surfaces to be insulated are clean and dry.

B. Proceed with installation only after unsatisfactory conditions have been corrected.

3.2 PREPARATION

A. Clean and dry surfaces to receive insulation. Remove materials that will adversely affect insulation application.

B. Clean and prepare surfaces to be insulated. Before insulating, apply a corrosion coating to insulated surfaces as follows:

1. Stainless Steel: Coat 300 series stainless steel with an epoxy primer 5 mils thick and an epoxy finish 5 mils thick if operating in a temperature range between 140 and 300 deg F. Consult coating manufacturer for appropriate coating materials and application methods for operating temperature range.
2. Carbon Steel: Coat carbon steel operating at a service temperature of between 32 and 300 deg F with an epoxy coating. Consult coating manufacturer for appropriate coating materials and application methods for operating temperature range.

C. Coordinate insulation installation with the tradesman installing heat tracing. Comply with requirements for heat tracing that apply to insulation.

D. Mix insulating cements with clean potable water; if insulating cements are to be in contact with stainless steel surfaces, use demineralized water.

3.3 GENERAL INSTALLATION REQUIREMENTS

A. Install insulation materials, accessories, and finishes with smooth, straight, and even surfaces; free of voids throughout the length of piping, including fittings, valves, and specialties.

B. Install insulation materials, forms, vapor barriers or retarders, jackets, and of thicknesses required for each item of pipe system, as specified in insulation system schedules.

C. Install accessories compatible with insulation materials and suitable for the service. Install accessories that do not corrode, compress, or otherwise damage insulation or jacket.

D. Install insulation with longitudinal seams at top and bottom (12 o'clock and 6 o'clock positions) of horizontal runs.

E. Install multiple layers of insulation with longitudinal and end seams staggered.

F. Do not weld brackets, clips, or other attachment devices to piping, fittings, and specialties.

G. Keep insulation materials dry during storage, application, and finishing. Replace insulation materials that get wet during storage or in the installation process before being properly covered and sealed in accordance with the Contract Documents.

H. Install insulation with tight longitudinal seams and end joints. Bond seams and joints with adhesive recommended by insulation material manufacturer.

I. Install insulation with least number of joints practical.

J. Where vapor barrier is indicated, seal joints, seams, and penetrations in insulation at hangers, supports, anchors, and other projections with vapor-barrier mastic.

1. Install insulation continuously through hangers and around anchor attachments.
2. For insulation application where vapor barriers are indicated, extend insulation on anchor legs from point of attachment to supported item to point of attachment to structure. Taper and seal ends attached to structure with vapor-barrier mastic.
3. Install insert materials and insulation to tightly join the insert. Seal insulation to insulation inserts with adhesive or sealing compound recommended by insulation material manufacturer.
4. Cover inserts with jacket material matching adjacent pipe insulation. Install shields over jacket, arranged to protect jacket from tear or puncture by hanger, support, and shield.

K. Apply adhesives, mastics, and sealants at manufacturer's recommended coverage rate and wet and dry film thicknesses.

L. Install insulation with factory-applied jackets as follows:

1. Draw jacket tight and smooth, but not to the extent of creating wrinkles or areas of compression in the insulation.
2. Cover circumferential joints with 3-inch- wide strips, of same material as insulation jacket. Secure strips with adhesive and outward-clinching staples along both edges of strip, spaced 4 inches o.c.

3. Overlap jacket longitudinal seams at least 1-1/2 inches. Install insulation with longitudinal seams at bottom of pipe. Clean and dry surface to receive self-sealing lap. Staple laps with outward-clinching staples along edge at 4 inches o.c.
4. For below-ambient services, apply vapor-barrier mastic over staples.
5. Cover joints and seams with tape, in accordance with insulation material manufacturer's written instructions, to maintain vapor seal.
6. Where vapor barriers are indicated, apply vapor-barrier mastic on seams and joints and at ends adjacent to pipe flanges and fittings.

M. Cut insulation in a manner to avoid compressing insulation.

N. Finish installation with systems at operating conditions. Repair joint separations and cracking due to thermal movement.

O. Repair damaged insulation facings by applying same facing material over damaged areas. Extend patches at least 4 inches beyond damaged areas. Adhere, staple, and seal patches in similar fashion to butt joints.

P. For above-ambient services, do not install insulation to the following:

1. Vibration-control devices.
2. Testing agency labels and stamps.
3. Nameplates and data plates.

3.4 PENETRATIONS

A. Insulation Installation at Roof Penetrations: Install insulation continuously through roof penetrations.

1. Seal penetrations with flashing sealant.
2. For applications requiring only indoor insulation, terminate insulation above roof surface and seal with joint sealant. For applications requiring indoor and outdoor insulation, install insulation for outdoor applications tightly joined to indoor insulation ends. Seal joint with joint sealant.
3. Extend jacket of outdoor insulation outside roof flashing at least 2 inches below top of roof flashing.
4. Seal jacket to roof flashing with flashing sealant.

B. Insulation Installation at Aboveground Exterior Wall Penetrations: Install insulation continuously through wall penetrations.

1. Seal penetrations with flashing sealant.
2. For applications requiring only indoor insulation, terminate insulation inside wall surface and seal with joint sealant. For applications requiring indoor and outdoor insulation, install insulation for outdoor applications tightly joined to indoor insulation ends. Seal joint with joint sealant.
3. Extend jacket of outdoor insulation outside wall flashing and overlap wall flashing at least 2 inches.
4. Seal jacket to wall flashing with flashing sealant.

C. Insulation Installation at Interior Wall and Partition Penetrations (That Are Not Fire Rated): Install insulation continuously through walls and partitions.

D. Insulation Installation at Fire-Rated Wall and Partition Penetrations: Install insulation continuously through penetrations of fire-rated walls and partitions.

1. Comply with requirements in Section 078413 "Penetration Firestopping" for firestopping and fire-resistive joint sealers.

E. Insulation Installation at Floor Penetrations:

1. Pipe: Install insulation continuously through floor penetrations.
2. Seal penetrations through fire-rated assemblies. Comply with requirements in Section 078413 "Penetration Firestopping."

3.5 GENERAL PIPE INSULATION INSTALLATION

A. Requirements in this article generally apply to all insulation materials, except where more specific requirements are specified in various pipe insulation material installation articles below.

B. Insulation Installation on Fittings, Valves, Strainers, Flanges, Mechanical Couplings, and Unions:

1. Install insulation over fittings, valves, strainers, flanges, mechanical couplings, unions, and other specialties with continuous thermal and vapor-retarder integrity unless otherwise indicated.
2. Insulate pipe elbows using prefabricated fitting insulation made from same material and density as that of adjacent pipe insulation. Each piece is butted tightly against adjoining piece and bonded with adhesive. Fill joints, seams, voids, and irregular surfaces with insulating cement finished to a smooth, hard, and uniform contour that is uniform with adjoining pipe insulation.
3. Insulate tee fittings with prefabricated fitting insulation of same material and thickness as that used for adjacent pipe. Cut sectional pipe insulation to fit. Butt each section closely to the next and hold in place with tie wire. Bond pieces with adhesive.
4. Insulate valves using prefabricated fitting insulation of same material, density, and thickness as that used for adjacent pipe. Overlap adjoining pipe insulation by not less than 2 times the thickness of pipe insulation, or one pipe diameter, whichever is thicker. For valves, insulate up to and including the bonnets, valve stuffing-box studs, bolts, and nuts. Fill joints, seams, and irregular surfaces with insulating cement.
5. Insulate strainers using prefabricated fitting insulation of same material, density, and thickness as that used for adjacent pipe. Overlap adjoining pipe insulation by not less than 2 times the thickness of pipe insulation, or one pipe diameter, whichever is thicker. Fill joints, seams, and irregular surfaces with insulating cement. Insulate strainers, so strainer basket flange or plug can be easily removed and replaced without damaging the insulation and jacket. Provide a removable reusable insulation cover. For below-ambient services, provide a design that maintains vapor barrier.
6. Insulate flanges, mechanical couplings, and unions using a section of oversized preformed pipe insulation to fit. Overlap adjoining pipe insulation by not less than 2 times the thickness of pipe insulation, or one pipe diameter, whichever is thicker. Stencil or label the outside insulation jacket of each union with the word "union" matching size and color of pipe labels.
7. Cover segmented insulated surfaces with a layer of finishing cement and coat with a mastic. Install vapor-barrier mastic for below-ambient services and a breather mastic for above-ambient services. Reinforce the mastic with reinforcing mesh. Trowel the mastic to a smooth and well-shaped contour.
8. For services not specified to receive a field-applied jacket, except for flexible elastomeric and polyolefin, install fitted PVC cover over elbows, tees, strainers, valves, flanges, and unions. Terminate ends with PVC end caps. Tape PVC covers to adjoining insulation facing, using PVC tape.

C. Insulate instrument connections for thermometers, pressure gages, pressure temperature taps, test connections, flow meters, sensors, switches, and transmitters on insulated pipes. Shape insulation at these connections by tapering it to and around the connection with insulating cement and finish with finishing cement, mastic, and flashing sealant.

D. Install removable insulation covers at locations indicated. Installation conforms to the following:

1. Make removable flange and union insulation from sectional pipe insulation of same thickness as that on adjoining pipe. Install same insulation jacket as that of adjoining pipe insulation.

2. When flange and union covers are made from sectional pipe insulation, extend insulation from flanges or union at least 2 times the insulation thickness over adjacent pipe insulation on each side of flange or union. Secure flange cover in place with stainless steel or aluminum bands. Select band material compatible with insulation and jacket.
3. Construct removable valve insulation covers in same manner as for flanges, except divide the two-part section on the vertical center line of valve body.
4. When covers are made from block insulation, make two halves, each consisting of mitered blocks wired to stainless steel fabric. Secure this wire frame, with its attached insulation, to flanges with tie wire. Extend insulation at least 2 inches over adjacent pipe insulation on each side of valve. Fill space between flange or union cover and pipe insulation with insulating cement. Finish cover assembly with insulating cement applied in two coats. After first coat is dry, apply and trowel second coat to a smooth finish.
5. Unless a PVC jacket is indicated in field-applied jacket schedules, finish exposed surfaces with a metal jacket.

3.6 INSTALLATION OF CELLULAR-GLASS INSULATION

A. Insulation Installation on Straight Pipes and Tubes:

1. Secure each layer of insulation to pipe with wire or bands, and tighten bands without deforming insulation materials.
2. Where vapor barriers are indicated, seal longitudinal seams, end joints, and protrusions with vapor-barrier mastic and joint sealant.
3. For insulation with jackets on above-ambient services, secure laps with outward-clinched staples at 6 inches o.c.
4. For insulation with jackets on below-ambient services, do not staple longitudinal tabs. Instead, secure tabs with additional adhesive, as recommended by insulation material manufacturer, and seal with vapor-barrier mastic and flashing sealant.

B. Insulation Installation on Pipe Flanges:

1. Install prefabricated pipe insulation to outer diameter of pipe flange.
2. Make width of insulation section same as overall width of flange and bolts, plus twice the thickness of pipe insulation.
3. Fill voids between inner circumference of flange insulation and outer circumference of adjacent straight pipe segments with cut sections of cellular-glass block insulation of same thickness as that of pipe insulation. Where voids are difficult to fill with block insulation, fill the voids with a fibrous insulation material suitable for the specific operating temperature.
4. Install jacket material with manufacturer's recommended adhesive, overlap seams at least 1 inch, and seal joints with flashing sealant.

C. Insulation Installation on Pipe Fittings and Elbows:

1. Install prefabricated sections of same material as that of straight segments of pipe insulation when available. Secure according to manufacturer's written instructions.
2. When preformed sections of insulation are not available, install mitered or routed sections of cellular-glass insulation. Secure insulation materials with wire or bands.

D. Insulation Installation on Valves and Pipe Specialties:

1. Install prefabricated sections of cellular-glass insulation to valve body.
2. Arrange insulation to permit access to packing and to allow valve operation without disturbing insulation.
3. Install insulation to flanges as specified for flange insulation application.

3.7 INSTALLATION OF FLEXIBLE ELASTOMERIC INSULATION

A. Seal longitudinal seams and end joints with manufacturer's recommended adhesive to eliminate openings in insulation that allow passage of air to surface being insulated.

B. Insulation Installation on Pipe Flanges:

1. Install pipe insulation to outer diameter of pipe flange.
2. Make width of insulation section same as overall width of flange and bolts, plus twice the thickness of pipe insulation.
3. Fill voids between inner circumference of flange insulation and outer circumference of adjacent straight pipe segments with cut sections of sheet insulation of same thickness as that of pipe insulation.
4. Secure insulation to flanges and seal seams with manufacturer's recommended adhesive to eliminate openings in insulation that allow passage of air to surface being insulated.

C. Insulation Installation on Pipe Fittings and Elbows:

1. Install sections of pipe insulation and miter if required in accordance with manufacturer's written instructions.
2. Secure insulation materials and seal seams with manufacturer's recommended adhesive to eliminate openings in insulation that allow passage of air to surface being insulated.

D. Insulation Installation on Valves and Pipe Specialties:

1. Install prefabricated valve covers manufactured of same material as that of pipe insulation when available.
2. When prefabricated valve covers are not available, install cut sections of pipe and sheet insulation to valve body. Arrange insulation to permit access to packing and to allow valve operation without disturbing insulation.
3. Install insulation to flanges as specified for flange insulation application.
4. Secure insulation to valves and specialties, and seal seams with manufacturer's recommended adhesive to eliminate openings in insulation that allow passage of air to surface being insulated.

3.8 INSTALLATION OF GLASS-FIBER AND MINERAL WOOL INSULATION

A. Insulation Installation on Straight Pipes and Tubes:

1. Secure each layer of preformed pipe insulation to pipe with wire or bands, and tighten bands without deforming insulation materials.
2. Where vapor barriers are indicated, seal longitudinal seams, end joints, and protrusions with vapor-barrier mastic and joint sealant.
3. For insulation with jackets on above-ambient surfaces, secure laps with outward-clinched staples at 6 inches o.c.
4. For insulation with jackets on below-ambient surfaces, do not staple longitudinal tabs. Instead, secure tabs with additional adhesive, as recommended by insulation material manufacturer, and seal with vapor-barrier mastic and flashing sealant.

B. Insulation Installation on Pipe Flanges:

1. Install prefabricated pipe insulation to outer diameter of pipe flange.
2. Make width of insulation section same as overall width of flange and bolts, plus twice the thickness of pipe insulation.

3. Fill voids between inner circumference of flange insulation and outer circumference of adjacent straight pipe segments with glass-fiber or mineral-wool blanket insulation.
4. Install jacket material with manufacturer's recommended adhesive, overlap seams at least 1 inch, and seal joints with flashing sealant.

C. Insulation Installation on Pipe Fittings and Elbows:

1. Install prefabricated sections of same material as that of straight segments of pipe insulation when available.
2. When preformed insulation elbows and fittings are not available, install mitered sections of pipe insulation, to a thickness equal to adjoining pipe insulation. Secure insulation materials with wire or bands.

D. Insulation Installation on Valves and Pipe Specialties:

1. Install prefabricated sections of same material as that of straight segments of pipe insulation when available.
2. When prefabricated sections are not available, install fabricated sections of pipe insulation to valve body.
3. Arrange insulation to permit access to packing and to allow valve operation without disturbing insulation.
4. Install insulation to flanges as specified for flange insulation application.

3.9 INSTALLATION OF FIELD-APPLIED JACKETS

A. Where glass-cloth jackets are indicated, install directly over bare insulation or insulation with factory-applied jackets.

1. Draw jacket smooth and tight to surface with 2-inch overlap at seams and joints.
2. Embed glass cloth between two 0.062-inch- thick coats of lagging adhesive.
3. Completely encapsulate insulation with coating, leaving no exposed insulation.

B. Where PVC jackets are indicated and for horizontal applications, install with 1-inch overlap at longitudinal seams and end joints. Seal with manufacturer's recommended adhesive.

1. Apply two continuous beads of adhesive to seams and joints, one bead under lap and the finish bead along seam and joint edge.

C. Where metal jackets are indicated, install with 2-inch overlap at longitudinal seams and end joints. Overlap longitudinal seams arranged to shed water. Seal end joints with weatherproof sealant recommended by insulation manufacturer. Secure jacket with stainless steel bands 12 inches o.c. and at end joints.

D. Where PVDC jackets are indicated, install as follows:

1. Apply three separate wraps of filament tape per insulation section to secure pipe insulation to pipe prior to installation of PVDC jacket.
2. Wrap presized jackets around individual pipe insulation sections, with one end overlapping the previously installed sheet. Install presized jacket with an approximate overlap at butt joint of 2 inches over the previous section. Adhere lap seal using adhesive or SSL, and then apply 1-1/4 circumferences of appropriate PVDC tape around overlapped butt joint.
3. Continuous jacket can be spiral-wrapped around a length of pipe insulation. Apply adhesive or PVDC tape at overlapped spiral edge. When electing to use adhesives, refer to manufacturer's written instructions for application of adhesives along this spiral edge to maintain a permanent bond.

4. Jacket can be wrapped in cigarette fashion along length of roll for insulation systems with an outer circumference of 33-1/2 inches or less. The 33-1/2-inch- circumference limit allows for 2-inch-overlap seal. Using the length of roll allows for longer sections of jacket to be installed at one time. Use adhesive on the lap seal. Visually inspect lap seal for "fishmouthing," and use PVDC tape along lap seal to secure joint.
5. Repair holes or tears in PVDC jacket by placing PVDC tape over the hole or tear and wrapping a minimum of 1-1/4 circumferences to avoid damage to tape edges.

3.10 FINISHES

A. Insulation with ASJ, Glass-Cloth, or Other Paintable Jacket Material: Paint jacket with paint system identified below and as specified in Section 099113 "Exterior Painting" and Section 099123 "Interior Painting."

1. Flat Acrylic Finish: Two finish coats over a primer that is compatible with jacket material and finish coat paint. Add fungicidal agent to render fabric mildew proof.

a. Finish Coat Material: Interior, flat, latex-emulsion size.

B. Flexible Elastomeric Thermal Insulation: After adhesive has fully cured, apply two coats of insulation manufacturer's recommended protective coating.

C. Color: Final color as selected by Architect. Vary first and second coats to allow visual inspection of the completed Work.

D. Do not field paint aluminum or stainless steel jackets.

3.11 PIPING INSULATION SCHEDULE, GENERAL

A. Insulation conductivity and thickness per pipe size comply with schedules in this Section or with requirements of authorities having jurisdiction, whichever is more stringent.

B. Acceptable preformed pipe and tubular insulation materials and thicknesses are identified for each piping system and pipe size range. If more than one material is listed for a piping system, selection from materials listed is Contractor's option.

C. Items Not Insulated: Unless otherwise indicated, do not install insulation on the following:

1. Underground piping.
2. Chrome-plated pipes and fittings unless there is a potential for personnel injury.

3.12 INDOOR PIPING INSULATION SCHEDULE

A. Condensate and Equipment Drain Water below 60 Deg F:

1. All Pipe Sizes: Insulation is the following:

a. Flexible Elastomeric: ~~1~~ 1/2 inch thick.

B. Chilled Water and Brine, Above 40 Deg F:

1. NPS 12 and Smaller: Insulation is one of the following:

a. Cellular Glass: 1-1/2 inches thick.

C. Refrigerant Suction and Hot-Gas Piping:

1. All Pipe Sizes: Insulation is the following:

a. Flexible Elastomeric: 1 1/2 inch thick.

D. Heating-Hot-Water Supply and Return, 200 Deg F and Below:

1. All Pipe Sizes: Insulation is one of the following:

a. Glass-Fiber, Preformed Pipe Insulation, Type I: 2 inches thick.

3.13 OUTDOOR, ABOVEGROUND PIPING INSULATION SCHEDULE

A. Chilled Water and Brine:

1. All Pipe Sizes: Insulation is one of the following:

a. Cellular Glass: 2 inches thick.

B. Heating-Hot-Water Supply and Return, 200 Deg F and Below:

1. All Pipe Sizes: Insulation is one of the following:

a. Glass-Fiber, Preformed Pipe Insulation, Type I: 2 inches thick.

C. Refrigerant Suction and Hot-Gas Piping:

1. All Pipe Sizes: Insulation is the following:

a. Flexible Elastomeric: 1 1/2 inch thick.

3.14 OUTDOOR, FIELD-APPLIED JACKET SCHEDULE

A. Install jacket over insulation material. For insulation with factory-applied jacket, install the field-applied jacket over the factory-applied jacket.

B. If more than one material is listed, selection from materials listed is Contractor's option.

C. Piping, Exposed:

1. Aluminum, Smooth : 0.020 inch thick.

END OF SECTION 230719

SECTION 230923 - DIRECT DIGITAL CONTROL (DDC) SYSTEM FOR HVAC

PART 1 - GENERAL

1.1 RELATED DOCUMENTS

A. Drawings and general provisions of the Contract, including General and Supplementary Conditions and Division 01 Specification Sections, apply to this Section.

1.2 SUMMARY

A. Section Includes:

1. DDC system for monitoring and controlling of HVAC systems.
2. Delivery of selected control devices to equipment and systems manufacturers for factory installation and to HVAC systems installers for field installation.

B. Related Requirements:

C. Section 230923.13 "Energy Meters" for thermal and electric power energy meters that connect to DDC systems.

1. Section 230923.17 "Level Instruments" for liquid-level switches, sensors, and transmitters that connect to DDC systems.
2. Section 230923.22 "Position Instruments" for limit switches that connect to DDC systems.
3. Section 230923.33 "Vibration Instruments" for vibration instruments that connect to DDC systems.
4. Section 230923.43 "Weather Stations" for weather stations that connect to DDC systems.
5. Section 230993.11 "Sequence of Operations for HVAC DDC" for control sequences in DDC systems.
6. Communications Cabling:

    a. Section 260523 "Control-Voltage Electrical Power Cables" for balanced twisted pair communications cable.
    b. Section 271513 "Communications Copper Horizontal Cabling" for balanced twisted pair communications cable.
    c. Section 271523 "Communications Optical Fiber Horizontal Cabling" for optical fiber communications cable.

7. Raceways:

    a. Section 260533 "Raceways and Boxes for Electrical Systems" for raceways for low-voltage control cable.
    b. Section 270528 "Pathways for Communications Systems" for raceways for balanced twisted pair cabling and optical fiber cable.

8. Section 260553 "Identification for Electrical Systems" for identification requirements for electrical components.
9. Section 270553 "Identification for Communications Systems" for identification requirements for communications components.

1.3 DEFINITIONS

A. Algorithm: A logical procedure for solving a recurrent mathematical problem. A prescribed set of well-defined rules or processes for solving a problem in a finite number of steps.

B. Analog: A continuously varying signal value, such as current, flow, pressure, or temperature.

C. BACnet Specific Definitions:

1. BACnet: Building Automation Control Network Protocol, ASHRAE 135. A communications protocol allowing devices to communicate data over and services over a network.
2. BACnet Interoperability Building Blocks (BIBBs): BIBB defines a small portion of BACnet functionality that is needed to perform a particular task. BIBBs are combined to build the BACnet functional requirements for a device.
3. BACnet/IP: Defines and allows using a reserved UDP socket to transmit BACnet messages over IP networks. A BACnet/IP network is a collection of one or more IP subnetworks that share the same BACnet network number.
4. BACnet Testing Laboratories (BTL): Organization responsible for testing products for compliance with ASHRAE 135, operated under direction of BACnet International.
5. PICS (Protocol Implementation Conformance Statement): Written document that identifies the particular options specified by BACnet that are implemented in a device.

D. Binary: Two-state signal where a high signal level represents ON" or "OPEN" condition and a low signal level represents "OFF" or "CLOSED" condition. "Digital" is sometimes used interchangeably with "Binary" to indicate a two-state signal.

E. Controller: Generic term for any standalone, microprocessor-based, digital controller residing on a network, used for local or global control. Three types of controllers are indicated: Network Controller, Programmable Application Controller, and Application-Specific Controller.

F. Control System Integrator: An entity that assists in expansion of existing enterprise system and support of additional operator interfaces to I/O being added to existing enterprise system.

G. COV: Changes of value.

H. DDC System Provider: Authorized representative of, and trained by, DDC system manufacturer and responsible for execution of DDC system Work indicated.

I. Distributed Control: Processing of system data is decentralized and control decisions are made at subsystem level. System operational programs and information are provided to remote subsystems and status is reported back. On loss of communication, subsystems shall be capable of operating in a standalone mode using the last best available data.

J. DOCSIS: Data-Over Cable Service Interface Specifications.

K. Gateway: Bidirectional protocol translator that connects control systems that use different communication protocols.

L. HLC: Heavy load conditions.

M. I/O: System through which information is received and transmitted. I/O refers to analog input (AI), binary input (BI), analog output (AO) and binary output (BO). Analog signals are continuous and represent control influences such as flow, level, moisture, pressure, and temperature. Binary signals convert electronic signals to digital pulses (values) and generally represent two-position operating and alarm status. "Digital," (DI and (DO), is sometimes used interchangeably with "Binary," (BI) and (BO), respectively.

N. LAN: Local area network.

O. LNS: LonWorks Network Services.

P. Low Voltage: As defined in NFPA 70 for circuits and equipment operating at less than 50 V or for remote-control, signaling power-limited circuits.

Q. Mobile Device: A data-enabled phone or tablet computer capable of connecting to a cellular data network and running a native control application or accessing a web interface.

R. Modbus TCP/IP: An open protocol for exchange of process data.

S. MS/TP: Master-slave/token-passing, IEE 8802-3. Datalink protocol LAN option that uses twisted-pair wire for low-speed communication.

T. MTBF: Mean time between failures.

U. Network Controller: Digital controller, which supports a family of programmable application controllers and application-specific controllers, that communicates on peer-to-peer network for transmission of global data.

V. Network Repeater: Device that receives data packet from one network and rebroadcasts it to another network. No routing information is added to protocol.

W. Peer to Peer: Networking architecture that treats all network stations as equal partners.

X. POT: Portable operator's terminal.

Y. PUE: Performance usage effectiveness.

Z. RAM: Random access memory.

AA. RF: Radio frequency.

BB. Router: Device connecting two or more networks at network layer.

CC. Server: Computer used to maintain system configuration, historical and programming database.

DD. TCP/IP: Transport control protocol/Internet protocol.

EE. UPS: Uninterruptible power supply.

FF. USB: Universal Serial Bus.

GG. User Datagram Protocol (UDP): This protocol assumes that the IP is used as the underlying protocol.

HH. VAV: Variable air volume.

II. WLED: White light emitting diode.

1.4 ACTION SUBMITTALS

A. Multiple Submissions:

1. If multiple submissions are required to execute work within schedule, first submit a coordinated schedule clearly defining intent of multiple submissions. Include a proposed date of each submission with a detailed description of submittal content to be included in each submission.
2. Clearly identify each submittal requirement indicated and in which submission the information will be provided.
3. Include an updated schedule in each subsequent submission with changes highlighted to easily track the changes made to previous submitted schedule.

B. Product Data: For each type of product include the following:

1. Construction details, material descriptions, dimensions of individual components and profiles, and finishes.
2. Operating characteristics, electrical characteristics, and furnished accessories indicating process operating range, accuracy over range, control signal over range, default control signal with loss of power, calibration data specific to each unique application, electrical power requirements, and limitations of ambient operating environment, including temperature and humidity.
3. Product description with complete technical data, performance curves, and product specification sheets.
4. Installation, operation and maintenance instructions including factors effecting performance.
5. Bill of materials of indicating quantity, manufacturer, and extended model number for each unique product.

    a. Workstations.
    b. Servers.
    c. Gateways.
    d. Routers.
    e. Protocol analyzers.
    f. DDC controllers.
    g. Enclosures.
    h. Electrical power devices.
    i. UPS units.
    j. Accessories.
    k. Instruments.
    l. Control dampers and actuators.
    m. Control valves and actuators.

6. When manufacturer's product datasheets apply to a product series rather than a specific product model, clearly indicate and highlight only applicable information.
7. Each submitted piece of product literature shall clearly cross reference specification and drawings that submittal is to cover.

C. Software Submittal:

1. Cross-referenced listing of software to be loaded on each operator workstation, server, gateway, and DDC controller.
2. Description and technical data of all software provided, and cross-referenced to products in which software will be installed.
3. Operating system software, operator interface and programming software, color graphic software, DDC controller software, maintenance management software, and third-party software.
4. Include a flow diagram and an outline of each subroutine that indicates each program variable name and units of measure.
5. Listing and description of each engineering equation used with reference source.

6. Listing and description of each constant used in engineering equations and a reference source to prove origin of each constant.
7. Description of operator interface to alphanumeric and graphic programming.
8. Description of each network communication protocol.
9. Description of system database, including all data included in database, database capacity and limitations to expand database.
10. Description of each application program and device drivers to be generated, including specific information on data acquisition and control strategies showing their relationship to system timing, speed, processing burden and system throughout.
11. Controlled Systems: Instrumentation list with element name, type of device, manufacturer, model number, and product data. Include written description of sequence of operation including schematic diagram.

D. Shop Drawings:

1. General Requirements:

   a. Include cover drawing with Project name, location, Owner, Architect, Contractor and issue date with each Shop Drawings submission.
   b. Include a drawing index sheet listing each drawing number and title that matches information in each title block.

2. Include plans, elevations, sections, and mounting details where applicable.
3. Include details of product assemblies. Indicate dimensions, weights, loads, required clearances, method of field assembly, components, and location and size of each field connection.
4. Detail means of vibration isolation and show attachments to rotating equipment.
5. Plan Drawings indicating the following:

   a. Screened backgrounds of walls, structural grid lines, HVAC equipment, ductwork, and piping.
   b. Room names and numbers with coordinated placement to avoid interference with control products indicated.
   c. Each desktop workstation, server, gateway, router, DDC controller, control panel instrument connecting to DDC controller, and damper and valve connecting to DDC controller, if included in Project.
   d. Exact placement of products in rooms, ducts, and piping to reflect proposed installed condition.
   e. Network communication cable and raceway routing.
   f. Proposed routing of wiring, cabling, conduit, and tubing, coordinated with building services for review before installation.

6. Schematic drawings for each controlled HVAC system indicating the following:

   a. I/O points labeled with point names shown. Indicate instrument range, normal operating set points, and alarm set points. Indicate fail position of each damper and valve, if included in Project.
   b. I/O listed in table format showing point name, type of device, manufacturer, model number, and cross-reference to product data sheet number.
   c. A graphic showing location of control I/O in proper relationship to HVAC system.
   d. Wiring diagram with each I/O point having a unique identification and indicating labels for all wiring terminals.
   e. Unique identification of each I/O that shall be consistently used between different drawings showing same point.
   f. Elementary wiring diagrams of controls for HVAC equipment motor circuits including interlocks, switches, relays, and interface to DDC controllers.
   g. Narrative sequence of operation.

h. Graphic sequence of operation, showing all inputs and output logical blocks.

7. Control panel drawings indicating the following:

   a. Panel dimensions, materials, size, and location of field cable, raceways, and tubing connections.
   b. Interior subpanel layout, drawn to scale and showing all internal components, cabling and wiring raceways, nameplates, and allocated spare space.
   c. Front, rear, and side elevations and nameplate legend.
   d. Unique drawing for each panel.

8. DDC system network riser diagram indicating the following:

   a. Each device connected to network with unique identification for each.
   b. Interconnection of each different network in DDC system.
   c. For each network, indicate communication protocol, speed and physical means of interconnecting network devices, such as copper cable type, or optical fiber cable type. Indicate raceway type and size for each.
   d. Each network port for connection of an operator workstation or other type of operator interface with unique identification for each.

9. DDC system electrical power riser diagram indicating the following:

   a. Each point of connection to field power with requirements (volts/phase//hertz/ amperes/connection type) listed for each.
   b. Each control power supply including, as applicable, transformers, power-line conditioners, transient voltage suppression and high filter noise units, DC power supplies, and UPS units with unique identification for each.
   c. Each product requiring power with requirements (volts/phase//hertz/amperes/connection type) listed for each.
   d. Power wiring type and size, race type, and size for each.

10. Monitoring and control signal diagrams indicating the following:

    a. Control signal cable and wiring between controllers and I/O.
    b. Point-to-point schematic wiring diagrams for each product.
    c. Control signal tubing to sensors, switches, and transmitters.

    d. Process signal tubing to sensors, switches, and transmitters.

11. Color graphics indicating the following:

    a. Itemized list of color graphic displays to be provided.
    b. For each display screen to be provided, a true color copy showing layout of pictures, graphics, and data displayed.
    c. Intended operator access between related hierarchical display screens.

E. System Description:

1. Full description of DDC system architecture, network configuration, operator interfaces and peripherals, servers, controller types and applications, gateways, routers and other network devices, and power supplies.
2. Complete listing and description of each report, log and trend for format and timing, and events which initiate generation.

3. System and product operation under each potential failure condition including, but not limited to, the following:

    a. Loss of power.
    b. Loss of network communication signal.
    c. Loss of controller signals to inputs and outpoints.
    d. Operator workstation failure.
    e. Server failure.
    f. Gateway failure.
    g. Network failure
    h. Controller failure.
    i. Instrument failure.
    j. Control damper and valve actuator failure.

4. Complete bibliography of documentation and media to be delivered to Owner.
5. Description of testing plans and procedures.
6. Description of Owner training.

1.5 INFORMATIONAL SUBMITTALS

A. Qualification Data:

1. Systems Provider Qualification Data:

    a. Resume of project manager assigned to Project.
    b. Resumes of application engineering staff assigned to Project.
    c. Resumes of installation and programming technicians assigned to Project.
    d. Resumes of service technicians assigned to Project.
    e. Brief description of past project including physical address, floor area, number of floors, building system cooling and heating capacity, and building's primary function.
    f. Description of past project DDC system, noting similarities to Project scope and complexity indicated.
    g. Names of staff assigned to past project that will also be assigned to execute work of this Project.
    h. Owner contact information for past project including name, phone number, and e-mail address.
    i. Contractor contact information for past project including name, phone number, and e-mail address.

2. Manufacturer's qualification data.

B. Product Certificates:

1. Data Communications Protocol Certificates: Certifying that each proposed DDC system component complies with ASHRAE 135.
2. Data Communications Protocol Certificates: Certifying that each proposed DDC system component complies with LonWorks.

C. Field quality-control reports.

D. Sample Warranty: For manufacturer's warranty.

1.6 CLOSEOUT SUBMITTALS

A. Operation and Maintenance Data: For DDC system to include in emergency, operation, and maintenance manuals.

1. In addition to items specified in Section 017823 "Operation and Maintenance Data," include the following:

a. Project Record Drawings of as-built versions of submittal Shop Drawings provided in electronic PDF format.
b. Testing and commissioning reports and checklists of completed final versions of reports, checklists, and trend logs.
c. As-built versions of submittal Product Data.
d. Names, addresses, e-mail addresses, and 24-hour telephone numbers of Installer and service representatives for DDC system and products.
e. Operator's manual with procedures for operating control systems including logging on and off, handling alarms, producing point reports, trending data, overriding computer control, and changing set points and variables.
f. Programming manuals with description of programming language and syntax, of statements for algorithms and calculations used, of point database creation and modification, of program creation and modification, and of editor use.
g. Engineering, installation, and maintenance manuals that explain how to:

1) Design and install new points, panels, and other hardware.
2) Perform preventive maintenance and calibration.
3) Debug hardware problems.
4) Repair or replace hardware.

h. Documentation of all programs created using custom programming language including set points, tuning parameters, and object database.
i. Backup copy of graphic files, programs, and database on electronic media such as DVDs.
j. List of recommended spare parts with part numbers and suppliers.
k. Complete original-issue documentation, installation, and maintenance information for furnished third-party hardware including computer equipment and sensors.
l. Complete original-issue copies of furnished software, including operating systems, custom programming language, operator workstation software, and graphics software.
m. Licenses, guarantees, and warranty documents.
n. Recommended preventive maintenance procedures for system components, including schedule of tasks such as inspection, cleaning, and calibration; time between tasks; and task descriptions.
o. Owner training materials.

1.7 QUALITY ASSURANCE

A. DDC System Manufacturer Qualifications:

1. Nationally recognized manufacturer of DDC systems and products.
2. DDC systems with similar requirements to those indicated for a continuous period of 10 years within time of bid.
3. DDC systems and products that have been successfully tested and in use on at least five past projects.
4. Having complete published catalog literature, installation, operation, and maintenance manuals for all products intended for use.

5. Having full-time in-house employees for the following:

    a. Product research and development.
    b. Product and application engineering.
    c. Product manufacturing, testing, and quality control.
    d. Technical support for DDC system installation training, commissioning, and troubleshooting of installations.
    e. Owner operator training.

B. DDC System Provider Qualifications:

1. Authorized representative of, and trained by, DDC system manufacturer.
2. In-place facility located within 50 Miles of Project.
3. Demonstrated past experience with installation of DDC system products being installed for period within five consecutive years before time of bid.
4. Demonstrated past experience on five projects of similar complexity, scope, and value.
5. Each person assigned to Project shall have demonstrated past experience.
6. Staffing resources of competent and experienced full-time employees that are assigned to execute work according to schedule.
7. Service and maintenance staff assigned to support Project during warranty period.
8. Product parts inventory to support on-going DDC system operation for a period of not less than 5 years after Substantial Completion.
9. DDC system manufacturer's backing to take over execution of Work if necessary to comply with requirements indicated. Include Project-specific written letter, signed by manufacturer's corporate officer, if requested.

C. Testing Agency Qualifications: Member company of NETA.

1. Testing Agency's Field Supervisor: Certified by NETA to supervise on-site testing.

D. Welding Qualifications: Qualify procedures and personnel according to the following:

1. AWS D1.1/D1.1M, "Structural Welding Code - Steel."
2. AWS D1.2/D1.2M, "Structural Welding Code - Aluminum."
3. AWS D1.3/D1.3M, "Structural Welding Code - Sheet Steel."
4. AWS D1.4/D1.4M, "Structural Welding Code - Reinforcing Steel."

E. Pipe and Pressure-Vessel Welding Qualifications: Qualify procedures and operators according to "ASME Boiler and Pressure Vessel Code."

F. Mockups: Build mockups to verify selections made under Sample submittals, to demonstrate aesthetic effects, and to set quality standards for materials and products and for fabrication and installation.

1. Build mockups of completed installation for areas indicated on Drawings.
2. Approval of mockups does not constitute approval of deviations from Contract Documents contained in mockups unless Architect specifically approves such deviations in writing.

1.8 WARRANTY

A. Manufacturer's Warranty: Manufacturer and Installer agree to repair or replace products that fail in materials or workmanship within specified warranty period.

1. Failures shall be adjusted, repaired, or replaced at no additional cost or reduction in service to Owner.

2. Include updates or upgrades to software and firmware if necessary to resolve deficiencies.

   a. Install updates only after receiving Owner's written authorization.

3. Warranty service shall occur during normal business hours and commence within 24 hours of Owner's warranty service request.
4. Warranty Period: Two year(s) from date of Substantial Completion.

1.9 PROCUREMENT

A. The base bid for the BAS and digital control and communications components installed under this contract shall be an integrated distributed processing system by one of the manufacturers listed in the specifications section 230923 – Direct Digital Control (DDC) System for HVAC section 2.1.A.

B. Owner Preferred Alternates:

1. Alternate No. M-01: In lieu of manufacturers specified as base bid, state the amount (cost difference) to be added (or subtracted) to the base bid to provide a BACnet based building automation system by Johnson Controls Incorporated (JCI), as indicated on the drawings and described in the specifications.

PART 2 - PRODUCTS

2.1 DDC SYSTEM MANUFACTURERS

A. Manufacturers: Subject to compliance with requirements, provide products by the following:

1. Johnson Controls, Inc.

2. ABB Cylon.

2.2 DDC SYSTEM DESCRIPTION

A. Microprocessor-based monitoring and control including analog/digital conversion and program logic. A control loop or subsystem in which digital and analog information is received and processed by a microprocessor, and digital control signals are generated based on control algorithms and transmitted to field devices to achieve a set of predefined conditions.

1. DDC system shall consist of a high-speed, peer-to-peer network of distributed DDC controllers, other network devices, operator interfaces, and software.

B. Electrical Components, Devices, and Accessories: Listed and labeled as defined in NFPA 70, by a qualified testing agency, and marked for intended location and application.

2.3 WEB ACCESS

A. DDC system shall be web based.

1. Web-Based Access to DDC System:

a. DDC system software shall be based on server thin-client architecture, designed around open standards of web technology. DDC system server shall be accessed using a web browser over DDC system network, using Owner's LAN, and remotely over Internet through Owner's LAN.
b. Intent of thin-client architecture is to provide operators complete access to DDC system via a web browser. No special software other than a web browser shall be required to access graphics, point displays, and trends; to configure trends, points, and controllers; and to edit programming.
c. Web access shall be password protected.

2.4 PERFORMANCE REQUIREMENTS

A. Delegated Design, Qualified Professional Engineer: Engage a qualified professional engineer, as defined in Section 014000 "Quality Requirements," to design DDC system to satisfy requirements indicated.

B. Delegated Design, Qualified Professional: Engage a qualified professional to design DDC system to satisfy requirements indicated.

1. System Performance Objectives:

a. DDC system shall manage HVAC systems.
b. DDC system control shall operate HVAC systems to achieve optimum operating costs while using least possible energy and maintaining specified performance.
c. DDC system shall respond to power failures, HVAC equipment failures, and adverse and emergency conditions encountered through connected I/O points.
d. DDC system shall operate while unattended by an operator and through operator interaction.
e. DDC system shall record trends and transaction of events and produce report information such as performance, energy, occupancies, and equipment operation.

C. Surface-Burning Characteristics: Products installed in ducts, equipment, and return-air paths shall comply with ASTM E84; testing by a qualified testing agency. Identify products with appropriate markings of applicable testing agency.

1. Flame-Spread Index: 25 or less.
2. Smoke-Developed Index: 50 or less.

D. DDC System Speed:

1. Response Time of Connected I/O:

a. AI point values connected to DDC system shall be updated at least every five seconds for use by DDC controllers. Points used globally shall also comply with this requirement.
b. BI point values connected to DDC system shall be updated at least every five seconds for use by DDC controllers. Points used globally shall also comply with this requirement.
c. AO points connected to DDC system shall begin to respond to controller output commands within two second(s). Global commands shall also comply with this requirement.
d. BO point values connected to DDC system shall respond to controller output commands within two second(s). Global commands shall also comply with this requirement.

2. Display of Connected I/O:

a. Analog point COV connected to DDC system shall be updated and displayed at least every 10 seconds for use by operator.

b. Binary point COV connected to DDC system shall be updated and displayed at least every 10 seconds for use by operator.
c. Alarms of analog and digital points connected to DDC system shall be displayed within 30 seconds of activation or change of state.
d. Graphic display refresh shall update within eight seconds.
e. Point change of values and alarms displayed from workstation to workstation when multiple operators are viewing from multiple workstations shall not exceed graphic refresh rate indicated.

E. Network Bandwidth: Design each network of DDC system to include at least 30 percent available spare bandwidth with DDC system operating under normal and heavy load conditions indicated. Calculate bandwidth usage, and apply a safety factor to ensure that requirement is satisfied when subjected to testing under worst case conditions.

F. DDC System Data Storage:

1. Include capability to archive not less than 60 consecutive months of historical data for all I/O points connected to system, including alarms, event histories, transaction logs, trends and other information indicated.

G. DDC Data Access:

1. When logged into the system, operator shall be able to also interact with any DDC controller connected to DDC system as required for functional operation of DDC system.
2. System(s) shall be used for application configuration; for archiving, reporting and trending of data; for operator transaction archiving and reporting; for network information management; for alarm annunciation; and for operator interface tasks and controls application management.

H. Future Expandability:

1. DDC system size shall be expandable to an ultimate capacity of at least two times total I/O points indicated.
2. Additional DDC controllers, I/O and associated wiring shall be all that is needed to achieve ultimate capacity. Initial network infrastructure shall be designed and installed to support ultimate capacity.
3. Operator interfaces installed initially shall not require hardware and software additions and revisions for ultimate capacity.

I. Input Point Displayed Accuracy: Input point displayed values shall meet following end-to-end overall system accuracy, including errors associated with meter, sensor, transmitter, lead wire or cable, and analog to digital conversion.

1. Energy:

a. Thermal: Within 1 percent of reading.
b. Electric Power: Within 1 percent of reading.
c. Requirements indicated on Drawings for meters not supplied by utility.

2. Flow:

a. Air: Within 5 percent of design flow rate.
b. Air (Terminal Units): Within 10 percent of design flow rate.
c. Water: Within 2 percent of design flow rate.
d. Steam: Within 5 percent of design flow rate.

3. Gas:

a. Carbon Dioxide: Within 50 ppm.
b. Carbon Monoxide: Within 5 percent of reading.
c. Oxygen: Within 5 percent of reading.

d. Refrigerant: Within 50 ppm.

4. Moisture (Relative Humidity):

a. Air: Within 2 percent RH.
b. Space: Within 2 percent RH.
c. Outdoor: Within 2 percent RH.

5. Level: Within 2 percent of reading.
6. Pressure:

a. Air, Ducts and Equipment: 0.5 percent of instrument span.
b. Space: Within 0.25 percent of instrument span.
c. Water: Within 0.5 percent of instrument span.
d. Steam: Within 0.5 percent of instrument span.

7. Speed: Within 5 percent of reading.
8. Temperature, Dew Point:

a. Air: Within 0.5 deg F.
b. Space: Within 0.5 deg F.
c. Outdoor: Within 2 deg F.

9. Temperature, Dry Bulb:

a. Air: Within 0.5 deg F.
b. Space: Within 0.5 deg F.
c. Outdoor: Within 1 deg F.
d. Chilled Water: Within 0.5 deg F.
e. Condenser Water: Within 0.5 deg F.
f. Heating Hot Water: Within 0.5 deg F.
g. Energy Recovery Runaround Liquid: Within 0.5 deg F.
h. Steam: Within 1 deg F.
i. Temperature Difference: Within 0.25 deg F.
j. Other Temperatures Not Indicated: Within 0.5 deg F.

10. Temperature, Wet Bulb:

a. Air: Within 0.5 deg F.
b. Space: Within 0.5 deg F.
c. Outdoor: Within 1 deg F.

11. Vibration: Within 5 percent of reading.

J. Precision of I/O Reported Values: Values reported in database and displayed shall have following precision:

1. Current:

a. Milliamperes: Nearest 1/100th of a milliampere.
b. Amperes: Nearest 1/10th of an ampere up to 100 A; nearest ampere for 100 A and more.

2. Energy:

   a. Electric Power:

      1) Rate (Watts): Nearest 1/10th of a watt through 1000 W.
      2) Rate (Kilowatts): Nearest 1/10th of a kilowatt through 1000 kW; nearest kilowatt above 1000 kW.
      3) Usage (Kilowatt-Hours): Nearest kilowatt through 10,000 kW; nearest 10 kW between 10,000 and 100,000 kW; nearest 100 kW for above 100,000 kW.

   b. Thermal, Rate:

      1) Heating: For Btu/h, nearest Btu/h up to 1000 Btu/h; nearest 10 Btu/h between 1000 and 10,000 Btu/h; nearest 100 Btu/h for above 10,000 Btu/h. For Mbh, round to nearest Mbh up to 1000 Mbh; nearest 10 Mbh between 1000 and 10,000 Mbh; nearest 100 Mbh above 10,000 Mbh.
      2) Cooling: For tons, nearest ton up to 1000 tons; nearest 10 tons between 1000 and 10,000 tons; nearest 100 tons above 10,000 tons.

   c. Thermal, Usage:

      1) Heating: For Btu, nearest Btu up to 1000 Btu; nearest 10 Btu between 1000 and 10,000 Btu; nearest 100 Btu for above 10,000 Btu. For Mbtu, round to nearest Mbtu up to 1000 Mbtu; nearest 10 Mbtu between 1000 and 10,000 Mbtu; nearest 100 Mbtu above 10,000 Mbtu.
      2) Cooling: For ton-hours, nearest ton-hours up to 1000 ton-hours; nearest 10 ton-hours between 1000 and 10,000 ton-hours; nearest 100 tons above 10,000 tons.

3. Flow:
   a. Water: Nearest 1/10th gpm through 100 gpm; nearest gpm between 100 and 1000 gpm; nearest 10 gpm between 1000 and 10,000 gpm; nearest 100 gpm above 10,000 gpm.

4. Gas:

   a. Carbon Dioxide (ppm): Nearest ppm.
   b. Carbon Monoxide (ppm): Nearest ppm.
   c. Oxygen (Percentage): Nearest 1/10th of 1 percent.
   d. Refrigerant (ppm): Nearest ppm.

5. Moisture (Relative Humidity):

   a. Relative Humidity (Percentage): Nearest 1 percent.

6. Level: Nearest 1/100th of an inch through 10 inches; nearest 1/10 of an inch between 10 and 100 inches; nearest inch above 100 inches.
7. Speed:

   a. Rotation (rpm): Nearest 1 rpm.
   b. Velocity: Nearest 1/10th fpm through 100 fpm; nearest fpm between 100 and 1000 fpm; nearest 10 fpm above 1000 fpm.

8. Position, Dampers and Valves (Percentage Open): Nearest 1 percent.
9. Pressure:

   a. Air, Ducts and Equipment: Nearest 1/10th in. w.c.

b. Space: Nearest 1/100th in. w.c.
c. Steam: Nearest 1/10th psig through 100 psig; nearest psig above 100 psig.
d. Water: Nearest 1/10 psig through 100 psig; nearest psig above 100 psig.

10. Temperature:

a. Air, Ducts and Equipment: Nearest 1/10th of a degree.
b. Outdoor: Nearest degree.
c. Space: Nearest 1/10th of a degree.
d. Chilled Water: Nearest 1/10th of a degree.
e. Condenser Water: Nearest 1/10th of a degree.
f. Heating Hot Water: Nearest degree.
g. Heat Recovery Runaround: Nearest 1/10th of a degree.
h. Steam: Nearest degree.

11. Vibration: Nearest 1/10th in/s.
12. Voltage: Nearest 1/10 volt up to 100 V; nearest volt above 100 V.

K. Control Stability: Control variables indicated within the following limits:

1. Flow:

a. Air, Ducts and Equipment, except Terminal Units: Within 2 percent of design flow rate.
b. Air, Terminal Units: Within 10 percent of design flow rate.
c. Water: Within 2 percent of design flow rate.

2. Gas:

a. Carbon Dioxide: Within 50 ppm.
b. Carbon Monoxide: Within 5 percent of reading.
c. Oxygen: Within 5 percent of reading.

3. Moisture (Relative Humidity):

a. Air: Within 2 percent RH.
b. Space: Within 2 percent RH.
c. Outdoor: Within 2 percent RH.

4. Level: Within 5 percent of reading.
5. Pressure:

a. Air, Ducts and Equipment: 0.5 percent of instrument span.
b. Space: Within 0.25 percent of instrument span.
c. Water: Within 0.5 percent of instrument span.

6. Temperature, Dew Point:

a. Air: Within 0.5 deg F.
b. Space: Within 0.5 deg F.

7. Temperature, Dry Bulb:

a. Air: Within 0.5 deg F.
b. Space: Within 0.5 deg F.
c. Chilled Water: Within 0.5 deg F.

d. Condenser Water: Within 0.5 deg F.
e. Heating Hot Water: Within 0.5 deg F.
f. Energy Recovery Runaround Liquid: Within 0.5 deg F.

8. Temperature, Wet Bulb:

a. Air: Within 0.5 deg F.
b. Space: Within 0.5 deg F.

L. Environmental Conditions for Controllers, Gateways, and Routers:

1. Products shall operate without performance degradation under ambient environmental temperature, pressure and humidity conditions encountered for installed location.

a. If product alone cannot comply with requirement, install product in a protective enclosure that is isolated and protected from conditions impacting performance. Enclosure shall be internally insulated, electrically heated, cooled and ventilated as required by product and application.

2. Products shall be protected with enclosures satisfying the following minimum requirements unless more stringent requirements are indicated. Products not available with integral enclosures complying with requirements indicated shall be housed in protective secondary enclosures. Installed location shall dictate the following NEMA 250 enclosure requirements:

a. Outdoors, Protected: Type 2.
b. Indoors, Heated and Air Conditioned: Type 1.
c. Mechanical Equipment Rooms:

1) Chiller and Boiler Rooms: Type 12.
2) Air-Moving Equipment Rooms: Type 1.

M. Environmental Conditions for Instruments and Actuators:

1. Instruments and actuators shall operate without performance degradation under the ambient environmental temperature, pressure, humidity, and vibration conditions specified and encountered for installed location.

a. If instruments and actuators alone cannot comply with requirement, install instruments and actuators in protective enclosures that are isolated and protected from conditions impacting performance. Enclosure shall be internally insulated, electrically heated and ventilated as required by instrument and application.

2. Instruments, actuators and accessories shall be protected with enclosures satisfying the following minimum requirements unless more stringent requirements are indicated. Instruments and actuators not available with integral enclosures complying with requirements indicated shall be housed in protective secondary enclosures. Installed location shall dictate the following NEMA 250 enclosure requirements:

a. Outdoors, Unprotected: Type 4X.
b. Indoors, Heated with Non-Filtered Ventilation: Type 2.
c. Indoors, Heated and Air-conditioned: Type 1.
d. Mechanical Equipment Rooms:

1) Chiller and Boiler Rooms: Type 12.
2) Air-Moving Equipment Rooms: Type 1.

e. Within Duct Systems and Air-Moving Equipment Not Exposed to Possible Condensation: Type 2.

N. DDC System Reliability:

1. Design, install and configure DDC controllers, gateways, routers, to yield a MTBF of at least 40,000 hours, based on a confidence level of at least 90 percent. MTBF value shall include any failure for any reason to any part of products indicated.

2. If required to comply with MTBF indicated, include DDC system and product redundancy to maintain DCC system, and associated systems and equipment that are being controlled, operational and under automatic control.

3. Critical systems and equipment that require a higher degree of DDC system redundancy than MTBF indicated shall be indicated on Drawings.

O. Electric Power Quality:

1. Power-Line Surges:

a. Protect susceptible DDC system products connected to ac power circuits from power-line surges to comply with requirements of IEEE C62.41.
b. Do not use fuses for surge protection.
c. Test protection in the normal mode and in the common mode, using the following two waveforms:

1) 10-by-1000-mic.sec. waveform with a peak voltage of 1500 V and a peak current of 60 A.
2) 8-by-20-mic.sec. waveform with a peak voltage of 1000 V and a peak current of 500 A.

2. Power Conditioning:

a. Protect susceptible DDC system products connected to ac power circuits from irregularities and noise rejection. Characteristics of power-line conditioner shall be as follows:

1) At 85 percent load, output voltage shall not deviate by more than plus or minus 1 percent of nominal when input voltage fluctuates between minus 20 percent to plus 10 percent of nominal.
2) During load changes from zero to full load, output voltage shall not deviate by more than plus or minus 3 percent of nominal.
3) Accomplish full correction of load switching disturbances within five cycles, and 95 percent correction within two cycles of onset of disturbance.
4) Total harmonic distortion shall not exceed 3-1/2 percent at full load.

3. Ground Fault: Protect products from ground fault by providing suitable grounding. Products shall not fail due to ground fault condition.

P. Backup Power Source:

1. HVAC systems and equipment served by a backup power source shall have associated DDC system products that control such systems and equipment also served from a backup power source.

Q. UPS:

1. DDC system products powered by UPS units shall include the following:

a. DDC controllers, except application-specific controllers.

R. Continuity of Operation after Electric Power Interruption:

1. Equipment and associated factory-installed controls, field-installed controls, electrical equipment, and power supply connected to building normal and backup power systems shall automatically return equipment and associated controls to operating state occurring immediately before loss of normal power, without need for manual intervention by operator when power is restored either through backup power source or through normal power if restored before backup power is brought online.

2.5 SYSTEM ARCHITECTURE

A. System architecture shall consist of no more than three levels of LANs.

1. Level one LAN shall connect network controllers and operator workstations.
2. Level one or Level two LAN shall connect programmable application controllers to other programmable application controllers, and to network controllers.
3. Level two or Level three LAN shall connect application-specific controllers to programmable application controllers and network controllers.
4. Level two or Level three LAN shall connect application-specific controllers to application-specific controllers.

B. Minimum Data Transfer and Communication Speed:

1. LAN Connecting Operator Workstations and Network Controllers: 100 Mbps.
2. LAN Connecting Programmable Application Controllers: 100 kbps.
3. LAN Connecting Application-Specific Controllers: 38,400 bps.

C. DDC system shall consist of dedicated and separated LANs that are not shared with other building systems and tenant data and communication networks.

D. System architecture shall be modular and have inherent ability to expand to not less than three times system size indicated with no impact to performance indicated.

E. System architecture shall perform modifications without having to remove and replace existing network equipment.

F. Number of LANs and associated communication shall be transparent to operator. All I/O points residing on any LAN shall be capable of global sharing between all system LANs.

G. System design shall eliminate dependence on any single device for system alarm reporting and control execution. Each controller shall operate independently by performing its' own control, alarm management and historical data collection.

H. Special Network Architecture Requirements:

1. Air-Handling Systems: For control applications of an air-handling system that consists of air-handling unit(s) and VAV terminal units, include a dedicated LAN of application-specific controllers serving VAV terminal units connected directly to controller that is controlling air-handling system air-handling unit(s). Basically, create a DDC system LAN that aligns with air-handling system being controlled.

2.6 DDC SYSTEM OPERATOR INTERFACES

A. Operator Means of System Access: Operator shall be able to access entire DDC system through any of multiple means, including, but not limited to, the following:

1. Remote connection through web access.

B. Access to system, regardless of operator means used, shall be transparent to operator.

C. Network Ports: For hardwired connection of desktop or portable workstation. Network port shall be easily accessible, properly protected, clearly labeled, and installed at the following locations:

1. Each boiler room.
2. Each chiller room or outdoor chiller yard.
3. Each different roof level with roof-mounted air-handling units or rooftop units.

D. Mobile Device:

1. Connect to system through a wireless router connected to LAN and cellular data service.
2. Able to communicate with any DDC controller connected to DDC system using a dedicated application and secure web access.

E. Critical Alarm Reporting:

1. Operator-selected critical alarms shall be sent by DDC system to notify operator of critical alarms that require immediate attention.
2. DDC system shall send alarm notification to multiple recipients that are assigned for each alarm.
3. DDC system shall notify recipients by any or all means, including e-mail, text message and prerecorded phone message to mobile and landline phone numbers.

F. Simultaneous Operator Use: Capable of accommodating up to 20 simultaneous operators that are accessing DDC system through any one of operator interfaces indicated.

2.7 NETWORKS

A. Acceptable networks for connecting workstations, mobile devices, and network controllers include the following:

1. IP.
2. IEEE 8802-3, Ethernet.

B. Acceptable networks for connecting programmable application controllers include the following:

1. IP.
2. IEEE 8802-3, Ethernet.

C. Acceptable networks for connecting application-specific controllers include the following:

1. IP.

2.8 NETWORK COMMUNICATION PROTOCOL

A. Network communication protocol(s) used throughout entire DDC system shall be open to Owner and available to other companies for use in making future modifications to DDC system.

B. ASHRAE 135 Protocol:

1. ASHRAE 135 communication protocol shall be sole and native protocol used throughout entire DDC system.
2. DDC system shall not require use of gateways except to integrate HVAC equipment and other building systems and equipment, not required to use ASHRAE 135 communication protocol.
3. If used, gateways shall connect to DDC system using ASHRAE 135 communication protocol and Project object properties and read/write services indicated by interoperability schedule.
4. Operator workstations, controllers and other network devices shall be tested and listed by BACnet Testing Laboratories.

C. Industry Standard Protocols:

1. DDC system shall use any one or a combination of the following industry standard protocols for network communication while complying with other DDC system requirements indicated:

   a. ASHRAE 135.
   b. Modbus Application Protocol Specification V1.1b.

2. Operator workstations and network controllers shall communicate through ASHRAE 135 or CEA-709.1-C protocol.
3. Portions of DDC system networks using ASHRAE 135 communication protocol shall be an open implementation of network devices complying with ASHRAE 135. Network devices shall be tested and listed by BACnet Testing Laboratories.
4. Portions of DDC system networks using Modbus Application Protocol Specification V1.1b communication protocol shall be an open implementation of network devices and technology complying with Modbus Application Protocol Specification V1.1b.
5. Gateways shall be used to connect networks and network devices using different protocols.

2.9 SERVERS

A. Control System shall connect to existing ADX Server serving the Government Center. Server shall be upgraded to most current released version of Metasys. Include SLA for patches and upgrades through warranty period.

2.10 SYSTEM SOFTWARE

A. System Software Minimum Requirements:

1. Real-time multitasking and multiuser 64-bit operating system that allows concurrent multiple operator workstations operating and concurrent execution of multiple real-time programs and custom program development.
2. Operating system shall be capable of operating Microsoft Windows applications.
3. Database management software shall manage all data on an integrated and non-redundant basis. Additions and deletions to database shall be without detriment to existing data. Include cross linkages so no data required by a program can be deleted by an operator until that data have been deleted from respective programs.
4. Network communications software shall manage and control multiple network communications to provide exchange of global information and execution of global programs.

5. Operator interface software shall include day-to-day operator transaction processing, alarm and report handling, operator privilege level and data segregation control, custom programming, and online data modification capability.
6. Scheduling software shall schedule centrally based time and event, temporary, and exception day programs.

B. Operator Interface Software:

1. Minimize operator training through use of English language prorating and English language point identification.
2. Minimize use of a typewriter-style keyboard through use of a pointing device similar to a mouse.
3. Operator sign-off shall be a manual operation or, if no keyboard or mouse activity takes place, an automatic sign-off.
4. Automatic sign-off period shall be programmable from one to 60 minutes in one-minute increments on a per operator basis.
5. Operator sign-on and sign-off activity shall be recorded and sent to printer.
6. Security Access:

    a. Operator access to DDC system shall be under password control.
    b. An alphanumeric password shall be field assignable to each operator.
    c. Operators shall be able to access DDC system by entry of proper password.
    d. Operator password shall be same regardless of which computer or other interface means is used.
    e. Additions or changes made to passwords shall be updated automatically.
    f. Each operator shall be assigned an access level to restrict access to data and functions the operator is cable of performing.
    g. Software shall have at least five access levels.
    h. Each menu item shall be assigned an access level so that a one-for-one correspondence between operator assigned access level(s) and menu item access level(s) is required to gain access to menu item.
    i. Display menu items to operator with those capable of access highlighted. Menu and operator access level assignments shall be online programmable and under password control.

7. Data Segregation:

    a. Include data segregation for control of specific data routed to a workstation, to an operator or to a specific output device, such as a printer.
    b. Include at least 32 segregation groups.
    c. Segregation groups shall be selectable such as "fire points," "fire points on second floor," "space temperature points," "HVAC points," and so on.
    d. Points shall be assignable to multiple segregation groups. Display and output of data to printer or monitor shall occur where there is a match of operator or peripheral segregation group assignment and point segregations.
    e. Alarms shall be displayed and printed at each peripheral to which segregation allows, but only those operators assigned to peripheral and having proper authorization level will be allowed to acknowledge alarms.
    f. Operators and peripherals shall be assignable to multiple segregation groups and all assignments are to be online programmable and under password control.

8. Operators shall be able to perform commands including, but not limited to, the following:

    a. Start or stop selected equipment.
    b. Adjust set points.
    c. Add, modify, and delete time programming.
    d. Enable and disable process execution.
    e. Lock and unlock alarm reporting for each point.

f. Enable and disable totalization for each point.
g. Enable and disable trending for each point.
h. Override control loop set points.
i. Enter temporary override schedules.
j. Define holiday schedules.
k. Change time and date.
l. Enter and modify analog alarm limits.
m. Enter and modify analog warning limits.
n. View limits.
o. Enable and disable demand limiting.
p. Enable and disable duty cycle.
q. Display logic programming for each control sequence.

9. Reporting:

a. Generated automatically and manually.
b. Sent to displays, printers and disk files.
c. Types of Reporting:

1) General listing of points.
2) List points currently in alarm.
3) List of off-line points.
4) List points currently in override status.
5) List of disabled points.
6) List points currently locked out.
7) List of items defined in a "Follow-Up" file.
8) List weekly schedules.
9) List holiday programming.
10) List of limits and deadbands.

10. Summaries: For specific points, for a logical point group, for an operator selected group(s), or for entire system without restriction due to hardware configuration.

C. Graphic Interface Software:

1. Include a full interactive graphical selection means of accessing and displaying system data to operator. Include at least five levels with the penetration path operator assignable (for example, site, building, floor, air-handling unit, and supply temperature loop). Native language descriptors assigned to menu items are to be operator defined and modifiable under password control.
2. Include a hierarchical-linked dynamic graphic operator interface for accessing and displaying system data and commanding and modifying equipment operation. Interface shall use a pointing device with pull-down or penetrating menus, color and animation to facilitate operator understanding of system.
3. Include at least 10 levels of graphic penetration with the hierarchy operator assignable.
4. Descriptors for graphics, points, alarms and such shall be modified through operator's workstation under password control.
5. Graphic displays shall be online user definable and modifiable using the hardware and software provided.
6. Data to be displayed within a graphic shall be assignable regardless of physical hardware address, communication or point type.
7. Graphics are to be online programmable and under password control.
8. Points may be assignable to multiple graphics where necessary to facilitate operator understanding of system operation.
9. Graphics shall also contain software points.

10. Penetration within a graphic hierarchy shall display each graphic name as graphics are selected to facilitate operator understanding.
11. Back-trace feature shall permit operator to move upward in the hierarchy using a pointing device. Back trace shall show all previous penetration levels. Include operator with option of showing each graphic full screen size with back trace as horizontal header or by showing a "stack" of graphics, each with a back trace.
12. Display operator accessed data on the monitor.
13. Operator shall select further penetration using pointing device to click on a site, building, floor, area, equipment, and so on. Defined and linked graphic below that selection shall then be displayed.
14. Include operator with means to directly access graphics without going through penetration path.
15. Dynamic data shall be assignable to graphics.
16. Display points (physical and software) with dynamic data provided by DDC system with appropriate text descriptors, status or value, and engineering unit.
17. Use color, rotation, or other highly visible means, to denote status and alarm states. Color shall be variable for each class of points, as chosen by operator.
18. Points shall be dynamic with operator adjustable update rates on a per point basis from one second to over a minute.
19. For operators with appropriate privilege, points shall be commanded directly from display using pointing device.

    a. For an analog command point such as set point, current conditions and limits shall be displayed and operator can position new set point using pointing device.
    b. For a digital command point such as valve position, valve shall show its current state such as open or closed and operator could select alternative position using pointing device.
    c. Keyboard equivalent shall be available for those operators with that preference.

20. Operator shall be able to split or resize viewing screen into quadrants to show one graphic on one quadrant of screen and other graphics or spreadsheet, bar chart, word processing, curve plot and other information on other quadrants on screen. This feature shall allow real-time monitoring of one part of system while displaying other parts of system or data to better facilitate overall system operation.
21. Help Features:

    a. On-line context-sensitive help utility to facilitate operator training and understanding.
    b. Bridge to further explanation of selected keywords. Document shall contain text and graphics to clarify system operation.

        1) If help feature does not have ability to bridge on keywords for more information, a complete set of user manuals shall be provided in an indexed word-processing program, which shall run concurrently with operating system software.

    c. Available for Every Menu Item:

        1) Index items for each system menu item.

22. Graphic generation software shall allow operator to add, modify, or delete system graphic displays.

    a. Include libraries of symbols depicting HVAC symbols such as fans, coils, filters, dampers, valves pumps, and electrical symbols similar to those indicated.
    b. Graphic development package shall use a pointing device in conjunction with a drawing program to allow operator to perform the following:

        1) Define background screens.
        2) Define connecting lines and curves.
        3) Locate, orient and size descriptive text.

4) Define and display colors for all elements.
5) Establish correlation between symbols or text and associated system points or other displays.

D. Project-Specific Graphics: Graphics documentation including, but not limited to, the following:

1. Site plan showing each building, and additional site elements, which are being controlled or monitored by DDC system.
2. Plan for each building floor, including interstitial floors, and each roof level of each building, showing the following:

a. Room layouts with room identification and name.
b. Locations and identification of all monitored and controlled HVAC equipment and other equipment being monitored and controlled by DDC system.
c. Location and identification of each hardware point being controlled or monitored by DDC system.

3. Control schematic for each of following, including a graphic system schematic representation, similar to that indicated on Drawings, with point identification, set point and dynamic value indication , sequence of operation and control logic diagram.
4. Graphic display for each piece of equipment connected to DDC system through a data communications link. Include dynamic indication of all points associated with equipment.
5. DDC system network riser diagram that shows schematic layout for entire system including all networks and all controllers, gateways operator workstations and other network devices.

E. Customizing Software:

1. Software to modify and tailor DDC system to specific and unique requirements of equipment installed, to programs implemented and to staffing and operational practices planned.
2. Online modification of DDC system configuration, program parameters, and database using menu selection and keyboard entry of data into preformatted display templates.
3. As a minimum, include the following modification capability:

a. Operator assignment shall include designation of operator passwords, access levels, point segregation and auto sign-off.
b. Peripheral assignment capability shall include assignment of segregation groups and operators to consoles and printers, designation of backup workstations and printers, designation of workstation header points and enabling and disabling of print-out of operator changes.
c. System configuration and diagnostic capability shall include communications and peripheral port assignments, DDC controller assignments to network, DDC controller enable and disable, assignment of command trace to points and application programs and initiation of diagnostics.
d. System text addition and change capability shall include English or native language descriptors for points, segregation groups and access levels and action messages for alarms, run time and trouble condition.
e. Time and schedule change capability shall include time and date set, time and occupancy schedules, exception and holiday schedules and daylight savings time schedules.
f. Point related change capability shall include the following:

1) System and point enable and disable.
2) Run-time enable and disable.
3) Assignment of points to segregation groups, calibration tables, lockout, and run time and to a fixed I/O value.
4) Assignment of alarm and warning limits.

g. Application program change capability shall include the following:

1) Enable and disable of software programs.
2) Programming changes.
3) Assignment of comfort limits, global points, time and event initiators, time and event schedules and enable and disable time and event programs.

4. Software shall allow operator to add points, or groups of points, to DDC system and to link them to energy optimization and management programs. Additions and modifications shall be online programmable using operator workstation, downloaded to other network devices and entered into their databases. After verification of point additions and associated program operation, database shall be uploaded and recorded on hard drive and disk for archived record.
5. Include high-level language programming software capability for implementation of custom DDC programs. Software shall include a compiler, linker, and up- and down-load capability.
6. Include a library of DDC algorithms, intrinsic control operators, arithmetic, logic and relational operators for implementation of control sequences. Also include, as a minimum, the following:

a. Proportional control (P).
b. Proportional plus integral (PI).
c. Proportional plus integral plus derivative (PID).
d. Adaptive and intelligent self-learning control.

1) Algorithm shall monitor loop response to output corrections and adjust loop response characteristics according to time constant changes imposed.
2) Algorithm shall operate in a continuous self-learning manner and shall retain in memory a stored record of system dynamics so that on system shut down and restart, learning process starts from where it left off.

7. Fully implemented intrinsic control operators including sequence, reversing, ratio, time delay, time of day, highest select AO, lowest select AO, analog controlled digital output, analog control AO, and digitally controlled AO.
8. Logic operators such as "And," "Or," "Not," and others that are part of a standard set available with a high-level language.
9. Arithmetic operators such as "Add," "Subtract," "Multiply," "Divide," and others that are part of a standard set available with a high-level language.
10. Relational operators such as "Equal To," "Not Equal To," "Less Than," "Greater Than," and others that are part of a standard set available with a high-level language.

F. Alarm Handling Software:

1. Include alarm handling software to report all alarm conditions monitored and transmitted through DDC controllers , gateways and other network devices.
2. Include first in, first out handling of alarms according to alarm priority ranking, with most critical alarms first, and with buffer storage in case of simultaneous and multiple alarms.
3. Alarm handling shall be active at all times to ensure that alarms are processed even if an operator is not currently signed on to DDC system.
4. Alarms display shall include the following:

a. Indication of alarm condition such as "Abnormal Off," "Hi Alarm," and "Low Alarm."
b. "Analog Value" or "Status" group and point identification with native language point descriptor such as "Space Temperature, Building 110, 2nd Floor, Room 212."
c. Discrete per point alarm action message, such as "Call Maintenance Dept. Ext-5561."
d. Include extended message capability to allow assignment and printing of extended action messages. Capability shall be operator programmable and assignable on a per point basis.

5. Alarms shall be directed to appropriate operator workstations, printers, and individual operators by privilege level and segregation assignments.

6. Send e-mail alarm messages to designated operators.
7. Send e-mail, page, text and voice messages to designated operators for critical alarms.
8. Alarms shall be categorized and processed by class.

    a. Class 1:

        1) Associated with fire, security and other extremely critical equipment monitoring functions; have alarm, trouble, return to normal, and acknowledge conditions printed and displayed.
        2) Unacknowledged alarms to be placed in unacknowledged alarm buffer.
        3) All conditions shall cause an audible sound and shall require individual acknowledgment to silence audible sound.

    b. Class 2:

        1) Critical, but not life-safety related, and processed same as Class 1 alarms, except do not require individual acknowledgment.
        2) Acknowledgement may be through a multiple alarm acknowledgment.

    c. Class 3:

        1) General alarms; printed, displayed and placed in unacknowledged alarm buffer queues.
        2) Each new alarm received shall cause an audible sound. Audible sound shall be silenced by "acknowledging" alarm or by pressing a "silence" key.
        3) Acknowledgement of queued alarms shall be either on an individual basis or through a multiple alarm acknowledgement.
        4) Alarms returning to normal condition shall be printed and not cause an audible sound or require acknowledgment.

    d. Class 4:

        1) Routine maintenance or other types of warning alarms.
        2) Alarms to be printed only, with no display, no audible sound and no acknowledgment required.

9. Include an unacknowledged alarm indicator on display to alert operator that there are unacknowledged alarms in system. Operator shall be able to acknowledge alarms on an individual basis or through a multiple alarm acknowledge key, depending on alarm class.
10. To ensure that no alarm records are lost, it shall be possible to assign a backup printer to accept alarms in case of failure of primary printer.

G. Reports and Logs:

1. Include reporting software package that allows operator to select, modify, or create reports using DDC system I/O point data available.
2. Each report shall be definable as to data content, format, interval and date.
3. Report data shall be sampled and stored on DDC controller, within storage limits of DDC controller, and then uploaded to archive on server for historical reporting.
4. Operator shall be able to obtain real-time logs of all I/O points by type or status, such as alarm, point lockout, or normal.
5. Reports and logs shall be stored on server hard drives in a format that is readily accessible by other standard software applications, including spreadsheets and word processing.
6. Reports and logs shall be readily printed and set to be printed either on operator command or at a specific time each day.

H. Standard Reports: Standard DDC system reports shall be provided and operator shall be able to customize reports later.

1. All I/O: With current status and values.
2. Alarm: All current alarms, except those in alarm lockout.
3. Disabled I/O: All I/O points that are disabled.
4. Alarm Lockout I/O: All I/O points in alarm lockout, whether manual or automatic.
5. Alarm Lockout I/O in Alarm: All I/O in alarm lockout that are currently in alarm.
6. Logs:

    a. Alarm history.
    b. System messages.
    c. System events.
    d. Trends.

I. Tenant Override Reports: Prepare Project-specific reports.

1. Weekly report showing daily total time in hours that each tenant has requested after-hours HVAC.
2. Monthly report showing daily total time in hours that each tenant has requested after-hours HVAC.
3. Annual summary report that shows after-hours HVAC usage on a monthly basis.

J. HVAC Equipment Reports: Prepare Project-specific reports.

1. Chiller Report: Daily report showing operating conditions of each chiller according to ASHRAE 147, including, but not limited to, the following:

    a. Chilled-water entering temperature.
    b. Chilled-water leaving temperature.
    c. Chilled-water flow rate.
    d. Chilled-water inlet and outlet pressures.
    e. Evaporator refrigerant pressure and temperature.
    f. Condenser refrigerant pressure and liquid temperature.
    g. Condenser-water entering temperature.
    h. Condenser-water leaving temperature.
    i. Condenser-water flow rate.
    j. Refrigerant levels.
    k. Oil pressure and temperature.
    l. Oil level.
    m. Compressor refrigerant discharge temperature.
    n. Compressor refrigerant suction temperature.
    o. Addition of refrigerant.
    p. Addition of oil.
    q. Vibration levels or observation that vibration is not excessive.
    r. Motor amperes per phase.
    s. Motor volts per phase.
    t. Refrigerant monitor level (PPM).
    u. Purge exhaust time or discharge count.
    v. Ambient temperature (dry bulb and wet bulb).
    w. Date and time logged.

K. Utility Reports: Prepare Project-specific reports.

1. Electric Report:

a. Include weekly report showing daily electrical consumption and peak electrical demand with time and date stamp for each meter.
b. Include monthly report showing the daily electrical consumption and peak electrical demand with time and date stamp for each meter.
c. Include annual report showing the monthly electrical consumption and peak electrical demand with time and date stamp for each meter.
d. For each weekly, monthly and annual report, include sum total of submeters combined by load type, such as lighting, receptacles and HVAC equipment showing daily electrical consumption and peak electrical demand.
e. For each weekly, monthly and annual report, include sum total of all submeters in building showing electrical consumption and peak electrical demand.

2. Natural Gas Report:

a. Include weekly report showing daily natural gas consumption and peak natural gas demand with time and date stamp for each meter.
b. Include monthly report showing the daily natural gas consumption and peak natural gas demand with time and date stamp for each meter.
c. Include annual report showing the monthly natural gas consumption and peak natural gas demand with time and date stamp for each meter.
d. For each weekly, monthly and annual report, include sum total of submeters combined by load type, such as boilers and service water heaters showing daily natural gas consumption and peak natural gas demand.
e. For each weekly, monthly and annual report, include sum total of all submeters in building showing natural gas consumption and peak natural gas demand.

3. Service Water Report:

a. Include weekly report showing daily service water consumption and peak service water demand with time and date stamp for each meter.
b. Include monthly report showing the daily service water consumption and peak service water demand with time and date stamp for each meter.
c. Include annual report showing the monthly service water consumption and peak service water demand with time and date stamp for each meter.
d. For each weekly, monthly and annual report, include sum total of submeters combined by load type, such as cooling tower makeup and irrigation showing daily service water consumption and peak service water demand.
e. For each weekly, monthly and annual report, include sum total of all submeters in building showing service water consumption and peak service water demand.

L. Energy Reports: Prepare Project-specific daily, weekly, monthly , annual and since-installed energy reports.

1. Prepare report for each purchased energy utility, indicating the following:

a. Time period being reported with beginning and end date, and time indicated.
b. Consumption in units of measure commonly used to report specific utility consumption over time.
c. Gross area served by utility.
d. Consumption per unit area served using utility-specific unit of measure.
e. Cost per utility unit.

f. Utility cost per unit area.
g. Convert all utilities to a common energy consumption unit of measure and report for each utility.
h. Consumption per unit area using common unit of measure.

2. Prepare report for each renewable energy source, indicating the following:

a. Time period being reported with beginning and end date, and time indicated.
b. Harvested energy in units of measure commonly used to report specific harvested energy consumption over time.
c. Gross area served by renewable energy source.
d. Harvested energy per unit area served using specific unit of measure.
e. Cost per purchased utility unit displaced by renewable energy.
f. Cost savings attributed to harvested energy source.
g. Cost savings per unit area attributed to harvested energy.
h. Convert all renewable energy sources to a common energy consumption unit of measure and report for each.
i. Harvested energy per unit area using common unit of measure.

3. Prepare purchased energy utility report for each submetered area that indicates the following:

a. Time period being reported with beginning and end date, and time indicated.
b. Gross area served.
c. Energy consumption by energy utility type.
d. Energy consumption per unit area by energy utility type.
e. Total energy consumption of all utilities in common units of measure.
f. Total energy consumption of all utilities in common units of measure per unit area.
g. Unit energy cost by energy utility type.
h. Energy cost by energy utility type.
i. Energy cost per unit area by energy utility type.
j. Total cost of all energy utilities.
k. Total cost of all energy utilities per unit area.

4. Prepare Project total purchased energy utility report that combines all purchased energy utilities and all areas served. Project total energy report shall indicate the following:

a. Time period being reported with beginning and end date, and time indicated.
b. Gross area served.
c. Energy consumption by energy utility type.
d. Energy consumption per unit area by energy utility type.
e. Total energy consumption of all utilities in common units of measure.
f. Total energy consumption of all utilities in common units of measure per unit area.
g. Unit energy cost by energy utility type.
h. Energy cost by energy utility type.
i. Energy cost per unit area by energy utility type.
j. Total cost of all energy utilities.
k. Total cost of all energy utilities per unit area.

M. HVAC System Efficiency Reports: Prepare Project-specific daily weekly monthly , annual and since-installed HVAC system efficiency reports.

1. Prepare report for each chilled-water system, indicating the following:

a. Time period being reported with beginning and end date, and time indicated.
b. Cooling energy supplied during time period.

c. Power energy consumed during time period by cooling equipment used to produce cooling energy supplied. List power consumed for each individual piece of equipment in system and summed total of all equipment in system.
d. Energy efficiency coefficient of performance determined by dividing power energy consumed into cooling energy supplied.
e. Energy efficiency determined by dividing cooling energy supplied into power energy consumed.
f. Units of measure used in report shall be consistent with units indicated for system.

2. Prepare report for each hot-water system, indicating the following:

a. Time period being reported with beginning and end date, and time indicated.
b. Cooling energy supplied during time period.
c. Fuel consumed during time period by boilers used to produce heating energy supplied. List fuel consumed for each individual piece of equipment in system and summed total of all equipment in system.
d. Energy efficiency determined by dividing heating energy supplied into fuel energy consumed.
e. Units of measure used in report shall be consistent with units indicated for system.

3. Prepare report for each steam system, indicating the following:

a. Time period being reported with beginning and end date, and time indicated.
b. Cooling energy supplied during time period.
c. Fuel consumed during time period by boilers used to produce heating energy supplied. List fuel consumed for each individual piece of equipment in system and summed total of all equipment in system.
d. Energy efficiency determined by dividing heating energy supplied into fuel energy consumed.
e. Units of measure used in report shall be consistent with units indicated for system.

N. Weather Reports:

1. Include daily report showing the following:

a. Daily minimum, maximum, and average outdoor dry-bulb temperature.
b. Daily minimum, maximum, and average outdoor wet-bulb temperature.
c. Daily minimum, maximum, and average outdoor dew point temperature.
d. Number of heating degree-days for each day calculated from a base temperature of 55 deg F.
e. Number of cooling degree-days for each day calculated from a base temperature of 65 deg F.
f. Daily minimum, maximum, and average outdoor carbon dioxide level.
g. Daily minimum, maximum, and average relative humidity.
h. Daily minimum, maximum, and average barometric pressure.
i. Daily minimum, maximum, and average wind speed and direction.

2. Include weekly report showing the following:

a. Daily minimum, maximum, and average outdoor dry-bulb temperature.
b. Daily minimum, maximum, and average outdoor wet-bulb temperature.
c. Daily minimum, maximum, and average outdoor dew point temperature.
d. Number of heating degree-days for each day calculated from a base temperature of 55 deg F.
e. Number of cooling degree-days for each day calculated from a base temperature of 65 deg F.
f. Weekly minimum, maximum, and average outdoor carbon dioxide level.
g. Daily minimum, maximum, and average relative humidity.
h. Daily minimum, maximum, and average barometric pressure.

i. Daily minimum, maximum, and average wind speed and direction.

3. Include monthly report showing the following:

a. Daily minimum, maximum, and average outdoor dry-bulb temperature.
b. Daily minimum, maximum, and average outdoor wet-bulb temperature.
c. Daily minimum, maximum, and average outdoor dew point temperature.
d. Number of heating degree-days for each day calculated from a base temperature of 55 deg F.
e. Number of cooling degree-days for each day calculated from a base temperature of 65 deg F.
f. Monthly minimum, maximum, and average outdoor carbon dioxide level.
g. Daily minimum, maximum, and average relative humidity.
h. Daily minimum, maximum, and average barometric pressure.
i. Daily minimum, maximum, and average wind speed and direction.

4. Include annual (12-month) report showing the following:

a. Monthly minimum, maximum, and average outdoor dry-bulb temperature.
b. Monthly minimum, maximum, and average outdoor wet-bulb temperature.
c. Monthly minimum, maximum, and average outdoor dew point temperature.
d. Number of heating degree-days for each month calculated from a base temperature of 55 deg F.
e. Number of cooling degree-days for each month calculated from a base temperature of 65 deg F.
f. Annual minimum, maximum, and average outdoor carbon dioxide level.
g. Monthly minimum, maximum, and average relative humidity.
h. Daily minimum, maximum, and average barometric pressure.
i. Daily minimum, maximum, and average wind speed and direction.

O. Standard Trends:

1. Trend all I/O point present values, set points, and other parameters indicated for trending.
2. Trends shall be associated into groups, and a trend report shall be set up for each group.
3. Trends shall be stored within DDC controller and uploaded to hard drives automatically on reaching 75 of DDC controller buffer limit, or by operator request, or by archiving time schedule.
4. Preset trend intervals for each I/O point after review with Owner.
5. Trend intervals shall be operator selectable from 10 seconds up to 60 minutes. Minimum number of consecutive trend values stored at one time shall be 100 per variable.
6. When drive storage memory is full, most recent data shall overwrite oldest data.
7. Archived and real-time trend data shall be available for viewing numerically and graphically by operators.

P. Custom Trends: Operator shall be able to define a custom trend log for any I/O point in DDC system.

1. Each trend shall include interval, start time, and stop time.
2. Data shall be sampled and stored on DDC controller, within storage limits of DDC controller, and then uploaded to archive on server hard drives.
3. Data shall be retrievable for use in spreadsheets and standard database programs.

Q. Programming Software:

1. Include programming software to execute sequences of operation indicated.
2. Include programming routines in simple and easy to follow logic with detailed text comments describing what the logic does and how it corresponds to sequence of operation.

3. Programming software shall be as follows :

    a. Graphic Based: Programming shall use a library of function blocks made from preprogrammed code designed for DDC control systems.

        1) Function blocks shall be assembled with interconnection lines that represent to control sequence in a flowchart.
        2) Programming tools shall be viewable in real time to show present values and logical results of each function block.

    b. Menu Based: Programming shall be done by entering parameters, definitions, conditions, requirements and constraints.
    c. Line by Line and Text Based: Programming shall declare variable types such as local, global, real, integer, and so on, at the beginning of the program. Use descriptive comments frequently to describe programming code.

4. Include means for detecting programming errors and testing software control strategies with a simulation tool before implementing in actual control. Simulation tool may be inherent with programming software or as a separate product.

R. Database Management Software:

1. Where a separate SQL database is used for information storage, DDC system shall include database management software that separates database monitoring and managing functions by supporting multiple separate windows.
2. Database secure access shall be accomplished using standard SQL authentication including ability to access data for use outside of DDC system applications.
3. Database management function shall include summarized information on trend, alarm, event, and audit for the following database management actions:

    a. Backup.
    b. Purge.
    c. Restore.

4. Database management software shall support the following:

    a. Statistics: Display database server information and trend, alarm, event, and audit information on database.
    b. Maintenance: Include method of purging records from trend, alarm, event and audit databases by supporting separate screens for creating a backup before purging, selecting database, and allowing for retention of a selected number of day's data.
    c. Backup: Include means to create a database backup file and select a storage location.
    d. Restore: Include a restricted means of restoring a database by requiring operator to have proper security level.

5. Database management software shall include information of current database activity, including the following:

    a. Ready.
    b. Purging record from a database.
    c. Action failed.
    d. Refreshing statistics.
    e. Restoring database.
    f. Shrinking a database.
    g. Backing up a database.

h. Resetting Internet information services.
i. Starting network device manager.
j. Shutting down the network device manager.
k. Action successful.

6. Database management software monitoring functions shall continuously read database information once operator has logged on.
7. Include operator notification through on-screen pop-up display and e-mail message when database value has exceeded a warning or alarm limit.
8. Monitoring settings window shall have the following sections:

a. Allow operator to set and review scan intervals and start times.
b. E-mail: Allow operator to create and review e-mail and phone text messages to be delivered when a warning or an alarm is generated.
c. Warning: Allow operator to define warning limit parameters, set reminder frequency and link e-mail message.
d. Alarm: Allow operator to define alarm limit parameters, set reminder frequency and link e-mail message.
e. Database Login: Protect system from unauthorized database manipulation by creating a read access and a write access for each of trend, alarm, event and audit databases as well as operator proper security access to restore a database.

9. Monitoring settings taskbar shall include the following informational icons:

a. Normal: Indicates by color and size, or other easily identifiable means that all databases are within their limits.
b. Warning: Indicates by color and size, or other easily identifiable means that one or more databases have exceeded their warning limit.
c. Alarm: Indicates by color and size, or other easily identifiable means that one or more databases have exceeded their alarm limit.

2.11 ASHRAE 135 GATEWAYS

A. Include BACnet communication ports, whenever available as an equipment OEM standard option, for integration via a single communication cable. BACnet-controlled plant equipment includes, but is not limited to, boilers, chillers, and variable-speed drives.

B. Include gateways to connect BACnet to legacy systems, existing non-BACnet devices, and existing non-BACnet DDC-controlled equipment, only when specifically requested and approved by Owner.

C. Include with each gateway an interoperability schedule showing each point or event on legacy side that BACnet "client" will read, and each parameter that BACnet network will write to. Describe this interoperability of BACnet services, or BIBBs, defined in ASHRAE 135, Annex K.

D. Gateway Minimum Requirements:

1. Read and view all readable object properties on non-BACnet network to BACnet network and vice versa where applicable.
2. Write to all writeable object properties on non-BACnet network from BACnet network and vice versa where applicable.
3. Include single-pass (only one protocol to BACnet without intermediary protocols) translation from non-BACnet protocol to BACnet and vice versa.

4. Comply with requirements of Data Sharing Read Property, Data Sharing Write Property, Device Management Dynamic Device Binding-B, and Device Management Communication Control BIBBs according to ASHRAE 135.
5. Hardware, software, software licenses, and configuration tools for operator-to-gateway communications.
6. Backup programming and parameters on CD media and the ability to modify, download, backup, and restore gateway configuration.

2.12 ASHRAE 135 PROTOCOL ANALYZER

A. Analyzer and required cables and fittings for connection to ASHRAE 135 network.

B. Analyzer shall include the following minimum capabilities:

1. Capture and store to a file data traffic on all network levels.
2. Measure bandwidth usage.
3. Filtering options with ability to ignore select traffic.

2.13 DDC CONTROLLERS

A. DDC system shall consist of a combination of network controllers, programmable application controllers and application-specific controllers to satisfy performance requirements indicated.

1. All controllers on project shall be IP based with a direct connection from each controller to a managed network switch port. BACnet MS/TP shall only be used where the equipment, VFD etc. does not support an IP connection.
2. Unmanaged network switches shall not be used anywhere on the control system without explicit approval in writing from the engineer of record.

B. DDC controllers shall perform monitoring, control, energy optimization and other requirements indicated.

C. DDC controllers shall use a multitasking, multiuser, real-time digital control microprocessor with a distributed network database and intelligence.

D. Each DDC controller shall be capable of full and complete operation as a completely independent unit and as a part of a DDC system wide distributed network.

E. Environment Requirements:

1. Controller hardware shall be suitable for the anticipated ambient conditions.
2. Controllers located in conditioned space shall be rated for operation at 32 to 120 deg F.
3. Controllers located outdoors shall be rated for operation at 40 to 150 deg F.

F. Power and Noise Immunity:

1. Controller shall operate at 90 to 110 percent of nominal voltage rating and shall perform an orderly shutdown below 80 percent of nominal voltage.
2. Operation shall be protected against electrical noise of 5 to 120 Hz and from keyed radios with up to 5 W of power located within 36 inches of enclosure.

G. DDC Controller Spare Processing Capacity:

1. Include spare processing memory for each controller. RAM, PROM, or EEPROM will implement requirements indicated with the following spare memory:

a. Network Controllers: 50 percent.
b. Programmable Application Controllers: Not less than 60 percent.
c. Application-Specific Controllers: Not less than 70 percent.

2. Memory shall support DDC controller's operating system and database and shall include the following:

a. Monitoring and control.
b. Energy management, operation and optimization applications.
c. Alarm management.
d. Historical trend data of all connected I/O points.
e. Maintenance applications.
f. Operator interfaces.
g. Monitoring of manual overrides.

H. DDC Controller Spare I/O Point Capacity: Include spare I/O point capacity for each controller a s follows:

1. Network Controllers:

a. 20 percent of each AI, AO, BI, and BO point connected to controller.
b. Minimum Spare I/O Points per Controller:

1) AIs: Three.
2) AOs: Three.
3) BIs: Three.
4) BOs: Three.

2. Programmable Application Controllers:

a. 20 percent of each AI, AO, BI, and BO point connected to controller.
b. Minimum Spare I/O Points per Controller:

1) AIs: Three.
2) AOs: Three.
3) BIs: Three.
4) BOs: Three.

3. Application-Specific Controllers:

a. 10 percent of each AI, AO, BI, and BO point connected to controller.
b. Minimum Spare I/O Points per Controller:

1) AIs: Two.
2) AOs: Two.
3) BIs: One.
4) BOs: One.

I. Maintenance and Support: Include the following features to facilitate maintenance and support:

1. Mount microprocessor components on circuit cards for ease of removal and replacement.
2. Means to quickly and easily disconnect controller from network.
3. Means to quickly and easily access connect to field test equipment.
4. Visual indication that controller electric power is on, of communication fault or trouble, and that controller is receiving and sending signals to network.

J. Input and Output Point Interface:

1. Hardwired input and output points shall connect to network, programmable application and application-specific controllers.
2. Input and output points shall be protected so shorting of point to itself, to another point, or to ground will not damage controller.
3. Input and output points shall be protected from voltage up to 24 V of any duration so that contact will not damage controller.
4. AIs:

   a. AIs shall include monitoring of low-voltage (zero- to 10-V dc), current (4 to 20 mA) and resistance signals from thermistor and RTD sensors.
   b. AIs shall be compatible with, and field configurable to, sensor and transmitters installed.
   c. Controller AIs shall perform analog-to-digital (A-to-D) conversion with a minimum resolution of 16 bits or better to comply with accuracy requirements indicated.
   d. Signal conditioning including transient rejection shall be provided for each AI.
   e. Capable of being individually calibrated for zero and span.
   f. Incorporate common-mode noise rejection of at least 50 dB from zero to 100 Hz for differential inputs, and normal-mode noise rejection of at least 20 dB at 60 Hz from a source impedance of 10000 ohms.

5. AOs:

   a. Controller AOs shall perform analog-to-digital (A-to-D) conversion with a minimum resolution of 16 bits or better to comply with accuracy requirements indicated.
   b. Output signals shall have a range of 4 to 20 mA dc or zero- to 10-V dc as required to include proper control of output device.
   c. Capable of being individually calibrated for zero and span.
   d. AOs shall not exhibit a drift of greater than 0.4 percent of range per year.

6. BIs:

   a. Controller BIs shall accept contact closures and shall ignore transients of less than 5-ms duration.
   b. Isolation and protection against an applied steady-state voltage of up to 180-V ac peak.
   c. BIs shall include a wetting current of at least 12 mA to be compatible with commonly available control devices and shall be protected against effects of contact bounce and noise.
   d. BIs shall sense "dry contact" closure without external power (other than that provided by the controller) being applied.
   e. Pulse accumulation input points shall comply with all requirements of BIs and accept up to 10 pulses per second for pulse accumulation. Buffer shall be provided to totalize pulses. Pulse accumulator shall accept rates of at least 20 pulses per second. The totalized value shall be reset to zero on operator's command.

7. BOs:

a. Controller BOs shall include relay contact closures or triac outputs for momentary and maintained operation of output devices.

1) Relay contact closures shall have a minimum duration of 0.1 second. Relays shall include at least 180 V of isolation. Electromagnetic interference suppression shall be provided on all output lines to limit transients to non-damaging levels. Minimum contact rating shall be 1 A at 24-V ac.
2) Triac outputs shall include at least 180 V of isolation. Minimum contact rating shall be 1 A at 24-V ac.

b. BOs shall include for two-state operation or a pulsed low-voltage signal for pulse-width modulation control.
c. BOs shall be selectable for either normally open or normally closed operation.
d. Include tristate outputs (two coordinated BOs) for control of three-point floating-type electronic actuators without feedback.
e. Limit use of three-point floating devices to VAV terminal unit control applications,. Control algorithms shall operate actuator to one end of its stroke once every 24 hours for verification of operator tracking.

2.14 NETWORK CONTROLLERS

A. General Network Controller Requirements:

1. Network Controllers shall be SNE type. Network Automation Engines (NAE) shall not be used.
2. Include adequate number of controllers to achieve performance indicated.
3. System shall consist of one or more independent, standalone, microprocessor-based network controllers to manage global strategies indicated.
4. Controller shall have enough memory to support its operating system, database, and programming requirements.
5. Data shall be shared between networked controllers and other network devices.
6. Operating system of controller shall manage input and output communication signals to allow distributed controllers to share real and virtual object information and allow for central monitoring and alarms.
7. Controllers that perform scheduling shall have a real-time clock.
8. Controller shall continually check status of its processor and memory circuits. If an abnormal operation is detected, controller shall assume a predetermined failure mode and generate an alarm notification.
9. Controllers shall be fully programmable.

B. Communication:

1. Network controllers shall communicate with other devices on DDC system Level one network.
2. Network controller also shall perform routing if connected to a network of programmable application and application-specific controllers.

C. Operator Interface:

1. Controller shall be equipped with a service communications port for connection to a portable operator's workstation or mobile device.
2. Local Keypad and Display:

a. Equip controller with local keypad and digital display for interrogating and editing data.

b. Use of keypad and display shall require security password.

D. Serviceability:

1. Controller shall be equipped with diagnostic LEDs or other form of local visual indication of power, communication, and processor.
2. Wiring and cable connections shall be made to field-removable, modular terminal strips or to a termination card connected by a ribbon cable.
3. Controller shall maintain BIOS and programming information in event of a power loss for at least 96 hours.

2.15 PROGRAMMABLE APPLICATION CONTROLLERS

A. General Programmable Application Controller Requirements:

1. Include adequate number of controllers to achieve performance indicated.
2. Controller shall have enough memory to support its operating system, database, and programming requirements.
3. Data shall be shared between networked controllers and other network devices.
4. Operating system of controller shall manage input and output communication signals to allow distributed controllers to share real and virtual object information and allow for central monitoring and alarms.
5. Controllers that perform scheduling shall have a real-time clock.
6. Controller shall continually check status of its processor and memory circuits. If an abnormal operation is detected, controller shall assume a predetermined failure mode and generate an alarm notification.
7. Controllers shall be fully programmable.

B. Communication:

1. Programmable application controllers shall communicate with other devices on network.

C. Operator Interface:

1. Controller shall be equipped with a service communications port for connection to a portable operator's workstation or mobile device.
2. Local Keypad and Display:

a. Equip controller with local keypad and digital display for interrogating and editing data.
b. Use of keypad and display shall require security password.

D. Serviceability:

1. Controller shall be equipped with diagnostic LEDs or other form of local visual indication of power, communication, and processor.
2. Wiring and cable connections shall be made to field-removable, modular terminal strips or to a termination card connected by a ribbon cable.
3. Controller shall maintain BIOS and programming information in event of a power loss for at least 72 hours.

2.16 APPLICATION-SPECIFIC CONTROLLERS

A. Description: Microprocessor-based controllers, which through hardware or firmware design are dedicated to control a specific piece of equipment. Controllers are not fully user-programmable but are configurable and customizable for operation of equipment they are designed to control.

1. Capable of standalone operation and shall continue to include control functions without being connected to network.
2. Data shall be shared between networked controllers and other network devices.

B. Communication: Application-specific controllers shall communicate with other application-specific controller and devices on network, and to programmable application and network controllers.

C. Operator Interface: Controller shall be equipped with a service communications port for connection to a portable operator's workstation. Connection shall extend to port on space temperature sensor that is connected to controller.

D. Serviceability:

1. Controller shall be equipped with diagnostic LEDs or other form of local visual indication of power, communication, and processor.
2. Wiring and cable connections shall be made to field-removable, modular terminal strips or to a termination card connected by a ribbon cable.
3. Controller shall use nonvolatile memory and maintain all BIOS and programming information in event of power loss.

2.17 CONTROLLER SOFTWARE

A. General Controller Software Requirements:

1. Software applications shall reside and operate in controllers. Editing of applications shall occur at operator workstations.
2. I/O points shall be identified by up to 30 -character point name and up to 16 -character point descriptor. Same names shall be used at operator workstations.
3. Control functions shall be executed within controllers using DDC algorithms.
4. Controllers shall be configured to use stored default values to ensure fail-safe operation. Default values shall be used when there is a failure of a connected input instrument or loss of communication of a global point value.

B. Security:

1. Operator access shall be secured using individual security passwords and user names.
2. Passwords shall restrict operator to points, applications, and system functions as assigned by system manager.
3. Operator log-on and log-off attempts shall be recorded.
4. System shall protect itself from unauthorized use by automatically logging off after last keystroke. The delay time shall be operator-definable.

C. Scheduling: Include capability to schedule each point or group of points in system. Each schedule shall consist of the following:

1. Weekly Schedule:

a. Include separate schedules for each day of week.

b. Each schedule should include the capability for start, stop, optimal start, optimal stop, and night economizer.
c. Each schedule may consist of up to 10 events.
d. When a group of objects are scheduled together, include capability to adjust start and stop times for each member.

2. Exception Schedules:

a. Include ability for operator to designate any day of the year as an exception schedule.
b. Exception schedules may be defined up to a year in advance. Once an exception schedule is executed, it will be discarded and replaced by regular schedule for that day of week.

3. Holiday Schedules:

a. Include capability for operator to define up to 99 special or holiday schedules.
b. Schedules may be placed on scheduling calendar and will be repeated each year.
c. Operator shall be able to define length of each holiday period.

D. System Coordination:

1. Include standard application for proper coordination of equipment.
2. Application shall include operator with a method of grouping together equipment based on function and location.
3. Group may then be used for scheduling and other applications.

E. Binary Alarms:

1. Each binary point shall be set to alarm based on operator-specified state.
2. Include capability to automatically and manually disable alarming.

F. Analog Alarms:

1. Each analog object shall have both high and low alarm limits.
2. Alarming shall be able to be automatically and manually disabled.

G. Alarm Reporting:

1. Operator shall be able to determine action to be taken in event of an alarm.
2. Alarms shall be routed to appropriate operator workstations based on time and other conditions.
3. Alarm shall be able to start programs, print, be logged in event log, generate custom messages, and display graphics.

H. Remote Communication:

1. System shall have ability to dial out in the event of an alarm.

I. Electric Power Demand Limiting:

1. Demand-limiting program shall monitor building or other operator-defined electric power consumption from signals connected to electric power meter or from a watt transducer or current transformer.
2. Demand-limiting program shall predict probable power demand such that action can be taken to prevent exceeding demand limit. When demand prediction exceeds demand limit, action will be taken to reduce loads in a predetermined manner. When demand prediction indicates demand limit will not be exceeded, action will be taken to restore loads in a predetermined manner.

3. Demand reduction shall be accomplished by the following means:

    a. Reset air-handling unit supply temperature set points.
    b. Reset space temperature set points.
    c. De-energize equipment based on priority.

4. Demand-limiting parameters, frequency of calculations, time intervals, and other relevant variables shall be based on the means by which electric power service provider computes demand charges.
5. Include demand-limiting prediction and control for any individual meter monitored by system or for total of any combination of meters.
6. Include means operator to make the following changes online:

    a. Addition and deletion of loads controlled.
    b. Changes in demand intervals.
    c. Changes in demand limit for meter(s).
    d. Maximum shutoff time for equipment.
    e. Minimum shutoff time for equipment.
    f. Select rotational or sequential shedding and restoring.

    g. Shed and restore priority.

7. Include the following information and reports, to be available on an hourly, daily, weekly, monthly and annual basis:

    a. Total electric consumption.
    b. Peak demand.
    c. Date and time of peak demand.
    d. Daily peak demand.

J. Maintenance Management: System shall monitor equipment status and generate maintenance messages based on operator-designated run-time, starts, and calendar date limits.

K. Sequencing: Include application software based on sequences of operation indicated to properly sequence chillers, boilers, and other applicable HVAC equipment.

L. Control Loops:

1. Support any of the following control loops, as applicable to control required:

    a. Two-position (on/off, open/close, slow/fast) control.
    b. Proportional control.
    c. Proportional plus integral (PI) control.
    d. Proportional plus integral plus derivative (PID) control.

        1) Include PID algorithms with direct or reverse action and anti-windup.
        2) Algorithm shall calculate a time-varying analog value used to position an output or stage a series of outputs.
        3) Controlled variable, set point, and PID gains shall be operator-selectable.

    e. Adaptive (automatic tuning).

M. Staggered Start: Application shall prevent all controlled equipment from simultaneously restarting after a power outage. Order which equipment (or groups of equipment) is started, along with the time delay between starts, shall be operator-selectable.

N. Energy Calculations:

1. Include software to allow instantaneous power or flow rates to be accumulated and converted to energy usage data.
2. Include an algorithm that calculates a sliding-window average (rolling average). Algorithm shall be flexible to allow window intervals to be operator specified (such as 15, 30, or 60 minutes).
3. Include an algorithm that calculates a fixed-window average. A digital input signal shall define start of window period (such as signal from utility meter) to synchronize fixed-window average with that used by utility.

O. Anti-Short Cycling:

1. BO points shall be protected from short cycling.
2. Feature shall allow minimum on-time and off-time to be selected.

P. On and Off Control with Differential:

1. Include an algorithm that allows a BO to be cycled based on a controlled variable and set point.
2. Algorithm shall be direct- or reverse-acting and incorporate an adjustable differential.

Q. Run-Time Totalization:

1. Include software to totalize run-times for all BI and BO points.
2. A high run-time alarm shall be assigned, if required, by operator.

2.18 ENCLOSURES

A. General Enclosure Requirements:

1. House each controller and associated control accessories in a single enclosure. Enclosure shall serve as central tie-in point for control devices such as switches, transmitters, transducers, power supplies and transformers.
2. Do not house more than one controller in a single enclosure.
3. Include enclosure door with key locking mechanism. Key locks alike for all enclosures and include one pair of keys per enclosure.
4. Equip doors of enclosures housing controllers and components with analog or digital displays with windows to allow visual observation of displays without opening enclosure door.
5. Individual wall-mounted single-door enclosures shall not exceed 36 inches wide and 48 inches high.
6. Individual wall-mounted double-door enclosures shall not exceed 60 inches wide and 36 inches high.
7. Freestanding enclosures shall not exceed 48 inches wide and 72 inches high.
8. Include wall-mounted enclosures with brackets suitable for mounting enclosures to wall or freestanding support stand as indicated.
9. Supply each enclosure with a complete set of as-built schematics, tubing, and wiring diagrams and product literature located in a pocket on inside of door. For enclosures with windows, include pocket on bottom of enclosure.

B. Internal Arrangement:

1. Internal layout of enclosure shall group and protect pneumatic, electric, and electronic components associated with a controller, but not an integral part of controller.
2. Arrange layout to group similar products together.
3. Include a barrier between line-voltage and low-voltage electrical and electronic products.

4. Factory or shop install products, tubing, cabling and wiring complying with requirements and standards indicated.
5. Terminate field cable and wire using heavy-duty terminal blocks.
6. Include spare terminals, equal to not less than 10 percent of used terminals.
7. Include spade lugs for stranded cable and wire.
8. Install a maximum of two wires on each side of a terminal.
9. Include enclosure field power supply with a toggle-type switch located at entrance inside enclosure to disconnect power.
10. Include enclosure with a line-voltage nominal 20-A GFCI duplex receptacle for service and testing tools. Wire receptacle on hot side of enclosure disconnect switch and include with a 5-A circuit breaker.
11. Mount products within enclosure on removable internal panel(s).
12. Include products mounted in enclosures with engraved, laminated phenolic nameplates (black letters on a white background). The nameplates shall have at least 1/4-inch- high lettering.
13. Route tubing cable and wire located inside enclosure within a raceway with a continuous removable cover.
14. Label each end of cable, wire and tubing in enclosure following an approved identification system that extends from field I/O connection and all intermediate connections throughout length to controller connection.
15. Size enclosure internal panel to include at least 25 percent spare area on face of panel.

C. Environmental Requirements:

1. Evaluate temperature and humidity requirements of each product to be installed within each enclosure.
2. Calculate enclosure internal operating temperature considering heat dissipation of all products installed within enclosure and ambient effects (solar, conduction and wind) on enclosure.
3. Where required by application, include temperature-controlled electrical heat to maintain inside of enclosure above minimum operating temperature of product with most stringent requirement.
4. Where required by application, include temperature-controlled ventilation fans with filtered louver(s) to maintain inside of enclosure below maximum operating temperature of product with most stringent requirement.
5. Include temperature-controlled cooling within the enclosure for applications where ventilation fans cannot maintain inside temperature of enclosure below maximum operating temperature of product with most stringent requirement.
6. Where required by application, include humidity-controlled electric dehumidifier or cooling to maintain inside of enclosure below maximum relative humidity of product with most stringent requirement and to prevent surface condensation within enclosure.

D. Wall-Mounted, NEMA 250, Type 1:

1. Manufacturers: Subject to compliance with requirements, provide products by one of the following:

    a. Hammond Mfg. Co. Inc.
    b. Hoffman; brand of nVent Electrical plc.
    c. Saginaw Control and Engineering.

2. Enclosure shall be NRTL listed according to UL 50 or UL 50E.
3. Construct enclosure of steel, not less than:

    a. Enclosure size less than 24 in.: 0.067 in. thick.
    b. Enclosure size 24 in. and larger: 0.093 in. thick.

4. Finish enclosure inside and out with polyester powder coating that is electrostatically applied and then baked to bond to substrate.

    a. Exterior color shall be ANSI 61 gray.
    b. Interior color shall be ANSI 61 gray.

5. Hinged door full size of front face of enclosure and supported using:

    a. Enclosures sizes less than 36 in. tall: Multiple butt hinges.
    b. Enclosures sizes 36 in. tall and larger: Continuous piano hinges.

6. Removable internal panel with a white polyester powder coating that is electrostatically applied and then baked to bond to substrate.

    a. Size less than 24 in.: Solid steel, 0.053 in. thick.
    b. Size 24 in. and larger: Solid steel, 0.093 in. thick.

7. Internal panel mounting hardware, grounding hardware and sealing washers.
8. Grounding stud on enclosure body.
9. Thermoplastic pocket on inside of door for record Drawings and Product Data.

E. Accessories:

1. Framed Fixed Window Kit for NEMA 250, Types 4, 4X, and 12 Enclosures:

    a. 0.25-inch-thick, scratch-resistant acrylic or polycarbonate window mounted in a metal frame matching adjacent door material.
    b. Enclosure types, except NEMA 250 Type 1, shall have a continuous gasket material around perimeter of window and frame to provide watertight seal.
    c. Window kit shall be factory or shop installed before shipment to Project.

2. Frameless Fixed Window Kit for NEMA 250, Type 1 Enclosures:

    a. 0.125-inch- thick, polycarbonate window mounted in enclosure door material.
    b. Window attached to door with screw fasteners and continuous strip of high-strength double-sided tape around window perimeter.
    c. Window kit shall be factory or shop installed before shipment to Project.

3. Frame Fixed or Hinged Window Kit for NEMA 250, Types 1 and 12 Enclosures:

    a. 0.25-inch-thick, scratch-resistant acrylic or polycarbonate window mounted in a metal frame matching adjacent door material.
    b. Enclosure types, except NEMA 250 Type 1, shall have a continuous gasket material around perimeter of window and frame to provide watertight seal.
    c. Window kit shall be factory or shop installed before shipment to Project.

4. Bar handle with keyed cylinder lock set.

2.19 RELAYS

A. General-Purpose Relays:

1. Manufacturers: Subject to compliance with requirements, undefined:

   a. Functional Devices. Inc.
   b. IDEC.

2. Relays shall be heavy duty and rated for at least 10 A at 250-V ac and 60 Hz.
3. Relays shall be either double pole double throw (DPDT) or three-pole double throw, depending on the control application.
4. Use a plug-in-style relay with an eight-pin octal plug for DPDT relays and an 11-pin octal plug for three-pole double-throw relays.
5. Construct the contacts of either silver cadmium oxide or gold.
6. Enclose the relay in a clear transparent polycarbonate dust-tight cover.
7. Relays shall have LED indication and a manual reset and push-to-test button.
8. Performance:

   a. Mechanical Life: At least 10 million cycles.
   b. Electrical Life: At least 100,000 cycles at rated load.
   c. Pickup Time: 15 ms or less.
   d. Dropout Time: 10 ms or less.
   e. Pull-in Voltage: 85 percent of rated voltage.
   f. Dropout Voltage: 50 percent of nominal rated voltage.
   g. Power Consumption: 2 VA.
   h. Ambient Operating Temperatures: Minus 40 to 115 deg F.

9. Equip relays with coil transient suppression to limit transients to non-damaging levels.
10. Plug each relay into an industry-standard, 35-mm DIN rail socket. Plug all relays located in control panels into sockets that are mounted on a DIN rail.
11. Relay socket shall have screw terminals. Mold into the socket the coincident screw terminal numbers and associated octal pin numbers.

B. Multifunction Time-Delay Relays:

1. Manufacturers: Subject to compliance with requirements, undefined:

   a. Functional Devices. Inc.
   b. IDEC.

2. Relays shall be continuous duty and rated for at least 10 A at 240-V ac and 60 Hz.
3. Relays shall be DPDT relay with up to eight programmable functions to provide on/off delay, interval and recycle timing functions.
4. Use a plug-in-style relay with either an 8- or 11-pin octal plug.
5. Construct the contacts of either silver cadmium oxide or gold.
6. Enclose the relay in a dust-tight cover.
7. Include knob and dial scale for setting delay time.
8. Performance:

   a. Mechanical Life: At least 10 million cycles.
   b. Electrical Life: At least 100,000 cycles at rated load.
   c. Timing Ranges: Multiple ranges from 0.1 seconds to 100 minutes.
   d. Repeatability: Within 2 percent.
   e. Recycle Time: 45 ms.

f. Minimum Pulse Width Control: 50 ms.
g. Power Consumption: 5 VA or less at 120-V ac.
h. Ambient Operating Temperatures: Minus 40 to 115 deg F.

9. Equip relays with coil transient suppression to limit transients to non-damaging levels.
10. Plug each relay into an industry-standard, 35-mm DIN rail socket. Plug all relays located in control panels into sockets that are mounted on a DIN rail.
11. Relay socket shall have screw terminals. Mold into the socket the coincident screw terminal numbers and associated octal pin numbers.

C. Latching Relays:

1. Manufacturers: Subject to compliance with requirements, undefined:

a. Functional Devices. Inc.
b. IDEC.

2. Relays shall be continuous duty and rated for at least 10 A at 250-V ac and 60 Hz.
3. Relays shall be either DPDT or three-pole double throw, depending on the control application.
4. Use a plug-in-style relay with a multibladed plug.
5. Construct the contacts of either silver cadmium oxide or gold.
6. Enclose the relay in a clear transparent polycarbonate dust-tight cover.
7. Performance:

a. Mechanical Life: At least 10 million cycles.
b. Electrical Life: At least 100,000 cycles at rated load.
c. Pickup Time: 15 ms or less.
d. Dropout Time: 10 ms or less.
e. Pull-in Voltage: 85 percent of rated voltage.
f. Dropout Voltage: 50 percent of nominal rated voltage.
g. Power Consumption: 2 VA.
h. Ambient Operating Temperatures: Minus 40 to 115 deg F.

8. Equip relays with coil transient suppression to limit transients to non-damaging levels.
9. Plug each relay into an industry-standard, 35-mm DIN rail socket. Plug all relays located in control panels into sockets that are mounted on a DIN rail.
10. Relay socket shall have screw terminals. Mold into the socket the coincident screw terminal numbers and associated octal pin numbers.

D. Current Sensing Relay:

1. Manufacturers: Subject to compliance with requirements, undefined:

a. Functional Devices. Inc.
b. Veris Industries.

2. Monitors ac current.
3. Independent adjustable controls for pickup and dropout current.
4. Energized when supply voltage is present and current is above pickup setting.
5. De-energizes when monitored current is below dropout current.
6. Dropout current is adjustable from 50 to 95 percent of pickup current.
7. Include a current transformer, if required for application.
8. House current sensing relay and current transformer in its own enclosure. Use NEMA 250, Type 12 enclosure for indoors and NEMA 250, Type 4 for outdoors.

E. Combination On-Off Status Sensor and On-Off Relay:

1. Manufacturers: Subject to compliance with requirements, undefined:

a. Functional Devices Inc.
b. Veris Industries.

2. Description:

a. On-off control and status indication in a single device.
b. LED status indication of activated relay and current trigger.
c. Closed-Open-Auto override switch located on the load side of the relay.

3. Performance:

a. Ambient Temperature: Minus 30 to 140 deg F.
b. Voltage Rating: Single-phase loads rated for 300-V ac. Three-phase loads rated for 600-V ac.

4. Status Indication:

a. Current Sensor: Integral sensing for single-phase loads up to 20 A and external solid or split sensing ring for three-phase loads up to 150 A.
b. Current Sensor Range: As required by application.
c. Current Set Point: Adjustable.
d. Current Sensor Output:

1) Solid-state, single-pole double-throw contact rated for 30-V ac and dc and for 0.4 A.
2) Solid-state, single-pole double-throw contact rated for 120-V ac and 1.0 A.
3) Analog, zero- to 5- or 10-V dc.
4) Analog, 4 to 20 mA, loop powered.

5. Relay: Single-pole double-throw, continuous-duty coil; rated for 10-million mechanical cycles.
6. Enclosure: NEMA 250, Type 1 enclosure.

2.20 ELECTRICAL POWER DEVICES

A. Transformers:

1. Transformer shall be sized for the total connected load, plus an additional 25 percent of connected load.
2. Transformer shall be at least 100 VA.
3. Transformer shall have both primary and secondary fuses.

B. Power-Line Conditioner:

1. Manufacturers: Subject to compliance with requirements, provide products by the following:

a. SOLA HD.

2. General Power-Line Conditioner Requirements:

a. Design to ensure maximum reliability, serviceability and performance.

b. Overall function of the power-line conditioner is to receive raw, polluted electrical power and purify it for use by electronic equipment. The power-line conditioner shall provide isolated, regulated, transient, and noise-free sinusoidal power to loads served.

3. Standards: NRTL listed per UL 1012.
4. Performance:

a. Single phase, continuous, 100 percent duty rated KVA/KW capacity. Design to supply power for linear or nonlinear, high crest factor, resistive and reactive loads.
b. Automatically regulate output voltage to within 2 percent or better with input voltage fluctuations of plus 10 to minus 20 percent of nominal when system is loaded 100 percent. Use Variable Range Regulation to obtain improved line voltage regulation when operating under less than full load conditions.

1) At 75 Percent Load: Output voltage automatically regulated to within 3 percent with input voltage fluctuations of plus 10 to minus 35 percent of nominal.
2) At 50 Percent Load: Output voltage automatically regulated to within 3 percent with input voltage fluctuations of plus 10 to minus 40 percent of nominal.
3) At 25 Percent Load: Output voltage automatically regulated to within 3 percent with input voltage fluctuations of plus 10 to minus 45 percent of nominal.

c. With input voltage distortion of up to 40 percent, limit the output voltage sine wave to a maximum harmonic content of 5 percent.
d. Automatically regulate output voltage to within 2.5 percent when load (resistive) changes from zero percent to 100 percent to zero percent.
e. Output voltage returns to 95 percent of nominal level within two cycles and to 100 percent within three cycles when the output is taken from no load to full resistive load or vice-versa. Recovery from partial resistive load changes is corrected in a shorter period of time.
f. K Factor: 30, designed to operate with nonlinear, non-sinusoidal, high crest factor loads without overheating.
g. Input power factor within 0.95 approaching unity with load power factor as poor as 0.6.
h. Attenuate load-generated odd current harmonics 23 dB at the input.
i. Electrically isolate the primary from the secondary. Meet isolation criteria as defined in NFPA 70, Article 250-5D.
j. Lighting and Surge Protection: Compares to UL 1449 rating of 330 V when subjected to Category B3 (6000 V/3000 A) combination waveform as established by IEEE C62.41.
k. Common-mode noise attenuation of 140 dB.
l. Transverse-mode noise attenuation of 120 dB.
m. With loss of input power for up to 16.6 ms, the output sine wave remains at usable ac voltage levels.
n. Reliability of 200,000 hours' MTBF.
o. At full load, when measured at 1-m distance, audible noise is not to exceed 54 dB.
p. Approximately 92 percent efficient at full load.

5. Transformer Construction:

a. Ferroresonant, dry type, convection cooled, 600V class. Transformer windings of Class H (220 deg C) insulated copper.
b. Use a Class H installation system throughout with operating temperatures not to exceed 150 deg C over a 40-deg C ambient temperature.
c. Configure transformer primary for multi-input voltage. Include input terminals for source conductors and ground.
d. Manufacture transformer core using M-6 grade, grain-oriented, stress-relieved transformer steel.

e. Configure transformer secondary in a 240/120-V split with a 208-V tap or straight 120 V, depending on power output size.
f. Electrically isolate the transformer secondary windings from the primary windings. Bond neutral conductor to cabinet enclosure and output neutral terminal.
g. Include interface terminals for output power hot, neutral and ground conductors.
h. Label leads, wires and terminals to correspond with circuit wiring diagram.
i. Vacuum impregnate transformer with epoxy resin.

6. Cabinet Construction:

a. Design for panel or floor mounting.
b. NEMA 250, Type 1, general-purpose, indoor enclosure.
c. Manufacture the cabinet from heavy gauge steel complying with UL 50.
d. Include a textured baked-on paint finish.

C. Transient Voltage Suppression and High-Frequency Noise Filter Unit:

1. Manufacturers: Subject to compliance with requirements, provide products by the following:

a. Current Technology Inc.

2. The maximum continuous operating voltage shall be at least 125 percent.
3. The operating frequency range shall be 47 to 63 Hz.
4. Protection modes according to NEMA LS-1.
5. The rated single-pulse surge current capacity, for each mode of protection, shall be no less than the following:

a. Line to Neutral: 45,000 A.
b. Neutral to Ground: 45,000 A.
c. Line to Ground: 45,000 A.
d. Per Phase: 90,000 A.

6. Clamping voltages shall be in compliance with test and evaluation procedures defined in NEMA LS-1. Maximum clamping voltage shall be as follows:

a. Line to Neutral: 360 V.
b. Line to Ground: 360 V.

c. Neutral to Ground: 360 V.

7. Electromagnetic interference and RF interference noise rejection or attenuation values shall comply with test and evaluation procedures defined in NEMA LS-1.

a. Line to Neutral:

1) 100 kHz: 42 dB.
2) 1 MHz: 25 dB.
3) 10 MHz: 21 dB.
4) 100 MHz: 36 dB.

b. Line to Ground:

1) 100 kHz: 16 dB.
2) 1 MHz: 55 dB.
3) 10 MHz: 81 dB.

4) 100 MHz: 80 dB.

8. Unit shall have LED status indicator that extinguishes to indicate a failure.
9. Unit shall be listed by an NRTL as a transient voltage surge suppressor per UL 1449, and as an electromagnetic interference filter per UL 1283.
10. Unit shall not generate any appreciable magnetic field.
11. Unit shall not generate an audible noise.

D. DC Power Supply:

1. Manufacturers: Subject to compliance with requirements, provide products by one of the following:

   a. Functional Devices, Inc.
   b. IDEC.

2. Plug-in style suitable for mating with a standard eight-pin octal socket. Include the power supply with a mating mounting socket.
3. Enclose circuitry in a housing.
4. Include both line and load regulation to ensure a stable output. To protect both the power supply and the load, power supply shall have an automatic current limiting circuit.
5. Performance:

   a. Output voltage nominally 25-V dc within 5 percent.
   b. Output current up to 100 mA.
   c. Input voltage nominally 120-V ac, 60 Hz.
   d. Load regulation within 0.5 percent from zero- to 100-mA load.
   e. Line regulation within 0.5 percent at a 100-mA load for a 10 percent line change.
   f. Stability within 0.1 percent of rated volts for 24 hours after a 20-minute warmup.

2.21 UNINTERRUPTABLE POWER SUPPLY (UPS) UNITS FOR WORKSTATIONS

A. 250 through 1000 VA:

1. Manufacturers: Subject to compliance with requirements, provide products by one of the following:

   a. APC.
   b. Cyberpower.

2. UPS units shall provide continuous, regulated output power without using their batteries during brown-out, surge, and spike conditions.
3. Load served shall not exceed 75 percent of UPS rated capacity, including power factor of connected loads.

   a. Larger-capacity units shall be provided for systems with larger connected loads.
   b. UPS shall provide 30 minutes of battery power.

4. Performance:

   a. Input Voltage: Single phase, 120- or 230-V ac, compatible with field power source.
   b. Load Power Factor Range (Crest Factor): 0.65 to 1.0.
   c. Output Voltage: 101- to 132-V ac, while input voltage varies between 89 and 152-V ac.
   d. On Battery Output Voltage: Sine wave.
   e. Inverter overload capacity shall be minimum 150 percent for 30 seconds.

f. Recharge time shall be a maximum of six hours to 90 percent capacity after full discharge to cutoff.
g. Transfer Time: 6 ms.
h. Surge Voltage Withstand Capacity: IEEE C62.41, Categories A and B; 6 kV/200 and 500 A; 100-kHz ringwave.

5. UPS shall be automatic during fault or overload conditions.
6. Unit with integral line-interactive, power condition topology to eliminate all power contaminants.
7. Include front panel with power switch and visual indication of power, battery, fault and temperature.
8. Unit shall include an audible alarm of faults and front panel silence feature.
9. Unit with four NEMA WD 1, NEMA WD 6 Configuration 5-15R receptacles.
10. UPS shall include dry contacts (digital output points) for low battery condition and battery-on (primary utility power failure) and connect the points to the DDC system.
11. Batteries shall be sealed lead-acid type and be maintenance free. Battery replacement shall be front accessible by user without dropping load.
12. Include tower models installed in ventilated cabinets to the particular installation location.

2.22 PROCESS TUBING

A. Products in this article are intended for signals to instruments connected to liquid and steam systems.

B. Copper Tubing:

1. Seamless phosphor deoxidized copper, soft annealed or drawn tempered with chemical and physical properties according to ASTM B75.
2. Performance, dimensions, weight and tolerance according to ASTM B280.
3. Diameter, as required by application, of not less than nominal 0.25 inch.
4. Wall thickness, as required by application, but not less than 0.030 inch.
5. Copper Tubing Connectors and Fittings (for Process Tubing) - Brass, Compression Type:

a. Manufacturers: Subject to compliance with requirements, provide products by one of the following:

1) BrassCraft Manufacturing Co.; a Masco company.
2) DK-LOK USA.
3) Parker Hannifin Corporation.

6. Copper Tubing Connectors and Fittings (for Process Tubing) - Brass, Solder-Joint Type:

a. Manufacturers: Subject to compliance with requirements, provide products by one of the following:

1) Elkhart Products Corporation; a part of Aalberts Integrated Piping Systems.
2) NIBCO INC.

C. Stainless Steel Tubing (for Process Tubing):

1. Seamless Type 316 stainless steel, Grade TP, cold drawn, annealed and pickled, free from scale.
2. Chemical and physical properties according to ASTM A269.
3. Diameter, as required by application, of not less than nominal 0.25 inch.
4. Wall thickness, as required by application, but not less than 0.035 inch.
5. Furnish stainless steel tubing in 20-foot straight random lengths.

D. Stainless Steel Tubing Connectors and Fittings (for Process Tubing):

1. Manufacturers: Subject to compliance with requirements, provide products by one of the following:

   a. DK-LOK USA.
   b. Parker Hannifin Corporation.

2. Connectors and fittings shall be stainless steel, with stainless steel collets, flareless type.
3. Connect instruments to tubing with connectors having compression connector on one end and IPS or NPT thread on other end.

2.23 CONTROL WIRE AND CABLE

A. Wire: Single conductor control wiring above 24 V.

1. Wire size shall be at least No. 16 AWG.
2. Conductor shall be 7/24 soft annealed copper strand with 2- to 2.5-inch lay.
3. Conductor insulation shall be 600 V, Type THWN or Type THHN, and 90 deg C according to UL 83.
4. Conductor colors shall be black (hot), white (neutral), and green (ground).
5. Furnish wire on spools.

B. Single Twisted Shielded Instrumentation Cable above 24 V:

1. Wire size shall be a minimum No. 18 AWG.
2. Conductors shall be a twisted, 7/24 soft annealed copper strand with a 2- to 2.5-inch lay.
3. Conductor insulation shall have a Type THHN/THWN or Type TFN rating.
4. Shielding shall be 100 percent type, 0.35/0.5-mil aluminum/Mylar tape, helically applied with 25 percent overlap, and aluminum side in with tinned copper drain wire.
5. Outer jacket insulation shall have a 600-V, 90-deg C rating and shall be Type TC cable.
6. For twisted pair, conductor colors shall be black and white. For twisted triad, conductor colors shall be black, red and white.
7. Furnish wire on spools.

C. Single Twisted Shielded Instrumentation Cable 24 V and Less:

1. Wire size shall be a minimum No. 18 AWG.
2. Conductors shall be a twisted, 7/24 soft annealed copper stranding with a 2- to 2.5-inch lay.
3. Conductor insulation shall have a nominal 15-mil thickness, constructed from flame-retardant PVC.
4. Shielding shall be 100 percent type, 1.35-mil aluminum/polymer tape, helically applied with 25 percent overlap, and aluminum side in with tinned copper drain wire.
5. Outer jacket insulation shall have a 300-V, 105-deg C rating and shall be Type PLTC cable.
6. For twisted pair, conductor colors shall be black and white. For twisted triad, conductor colors shall be black, red and white.
7. Furnish wire on spools.

D. LAN and Communication Cable: Comply with DDC system manufacturer requirements for network being installed.

1. Cable shall be balanced twisted pair.

2. Comply with the following requirements and for balanced twisted pair cable described in Section 260523 "Control-Voltage Electrical Power Cables." Section 271513 "Communications Copper Horizontal Cabling."

    a. Cable shall be plenum rated.
    b. Cable shall have a unique color that is different from other cables used on Project.

2.24 RACEWAYS

A. Comply with requirements in Section 260533 "Raceways and Boxes for Electrical Systems" for electrical power raceways and boxes.

B. Comply with requirements in Section 270528 "Pathways for Communications Systems" for raceways for balanced twisted pair cables and optical fiber cables.

2.25 OPTICAL FIBER CABLE AND CONNECTORS

A. Comply with requirements in Section 271323 "Communications Optical Fiber Backbone Cabling" for optical fiber backbone cabling and connectors.

B. Comply with requirements in Section 271523 "Communications Optical Fiber Horizontal Cabling" for optical fiber horizontal cabling and connectors.

2.26 ACCESSORIES

A. Damper Blade Limit Switches:

1. Sense positive open and/or closed position of the damper blades.
2. NEMA 250, Type 13, oil-tight construction.
3. Arrange for the mounting application.
4. Additional waterproof enclosure when required by its environment.
5. Arrange to prevent "over-center" operation.

B. Instrument Enclosures:

1. Manufacturers: Subject to compliance with requirements, provide products by one of the following:

    a. Hammond Mfg. Co. Inc.
    b. Hoffman; brand of nVent Electrical plc.
    c. Saginaw Control and Engineering.

2. Include instrument enclosure for secondary protection to comply with requirements indicated in "Performance Requirements" Article.
3. NRTL listed and labeled to UL 50.
4. Sized to include at least 25 percent spare area on subpanel.
5. Instrument(s) mounted within enclosure on internal subpanel(s).
6. Enclosure face with engraved, laminated phenolic nameplate for each instrument within enclosure.
7. Enclosures housing pneumatic instruments shall include main pressure gauge and a branch pressure gauge for each pneumatic device, installed inside.
8. Enclosures housing multiple instruments shall route tubing and wiring within enclosure in a raceway having a continuous removable cover.
9. Enclosures larger than 12 inches shall have a hinged full-size face cover.
10. Equip enclosure with lock and common key.

C. Manual Valves:

1. Ball Type:

a. Manufacturers: Subject to compliance with requirements, provide products by one of the following:

1) Apollo Valves; a part of Aalberts Integrated Piping Systems.
2) Milwaukee Valve Company.
3) NIBCO INC.

b. Body: Bronze ASTM B62 or ASTM B61.
c. Ball: Type 316 stainless steel.
d. Stem: Type 316 stainless steel.
e. Seats: Reinforced PTFE.
f. Packing Ring: Reinforced PTFE.
g. Lever: Stainless steel with a vinyl grip.
h. 600 WOG.
i. Threaded end connections.

2.27 IDENTIFICATION

A. Instrument Air Pipe and Tubing:

1. Engraved tag shall bear the following information:

a. Service (Example): "Instrument Air."
b. Pressure Range (Example): 0 to 30 psig.

2. Letter size shall be a minimum of 0.25 inch high.
3. Tag shall consist of white lettering on blue background.
4. Tag shall be engraved phenolic consisting of three layers of rigid laminate. Top and bottom layers are color-coded blue with contrasting white center exposed by engraving through outer layer.
5. Include tag with a brass grommet, chain and S-hook.

B. Control Equipment, Instruments, and Control Devices:

1. Laminated acrylic or melamine plastic sign bearing unique identification.

a. Include instruments with unique identification identified by equipment being controlled or monitored, followed by point identification.

2. Letter size shall be as follows:

a. Operator Workstations: Minimum of 0.5 inch high.
b. Servers: Minimum of 0.5 inch high.
c. Printers: Minimum of 0.5 inch high.
d. DDC Controllers: Minimum of 0.5 inch high.
e. Gateways: Minimum of 0.5 inch high.
f. Repeaters: Minimum of 0.5 inch high.
g. Enclosures: Minimum of 0.5 inch high.
h. Electrical Power Devices: Minimum of 0.25 inch high.
i. UPS units: Minimum of 0.5 inch high.
j. Accessories: Minimum of 0.25 inch high.
k. Instruments: Minimum of 0.25 inch high.

l. Control Damper and Valve Actuators: Minimum of 0.25 inch high.

3. Legend shall consist of white lettering on black background.
4. Laminated acrylic or melamine plastic sign shall be engraved phenolic consisting of three layers of rigid laminate. Top and bottom layers are color-coded black with contrasting white center exposed by engraving through outer layer and shall be fastened with drive pins.
5. Instruments, control devices, and actuators with Project-specific identification tags having unique identification numbers following requirements indicated and provided by original manufacturer do not require additional identification.

C. Valve Tags:

1. Brass tags and brass chains attached to valve.
2. Tags shall be at least 1.5 inches in diameter.
3. Include tag with unique valve identification indicating control influence such as flow, level, pressure, or temperature; followed by location of valve, and followed by three-digit sequential number. For example: TV-1.001.
4. Valves with Project-specific identification tags having unique identification numbers following requirements indicated and provided by original manufacturer do not require an additional tag.

D. Raceway and Boxes:

1. Comply with requirements for identification specified in Section 260553 "Identification for Electrical Systems."
2. Paint cover plates on junction boxes and conduit same color as the tape banding for conduits. After painting, label cover plate "HVAC Controls," using an engraved phenolic tag.
3. For raceways housing pneumatic tubing, add a phenolic tag labeled "HVAC Instrument Air Tubing."
4. For raceways housing air signal tubing, add a phenolic tag labeled "HVAC Air Signal Tubing."

E. Equipment Warning Labels:

1. Self-adhesive label with pressure-sensitive adhesive back and peel-off protective jacket.
2. Lettering size shall be at least 14-point type with white lettering on red background.
3. Warning label shall read "CAUTION-Equipment operated under remote automatic control and may start or stop at any time without warning. Switch electric power disconnecting means to OFF position before servicing."
4. Lettering shall be enclosed in a white line border. Edge of label shall extend at least 0.25 inch beyond white border.

2.28 SOURCE QUALITY CONTROL

A. Testing Agency: Engage a qualified testing agency to evaluate the following according to industry standards for each product, and to verify DDC system reliability specified in performance requirements:

1. DDC controllers.
2. Gateways.
3. Routers.
4. Operator workstations.

B. Product(s) and material(s) will be considered defective if they do not pass tests and inspections.

C. Prepare test and inspection reports.

PART 3 - EXECUTION

3.1 EXAMINATION

A. Examine substrates and conditions for compliance with requirements for installation tolerances and other conditions affecting performance of the Work.

1. Verify compatibility with and suitability of substrates.

B. Examine roughing-in for products to verify actual locations of connections before installation.

1. Examine roughing-in for instruments installed in piping to verify actual locations of connections before installation.
2. Examine roughing-in for instruments installed in duct systems to verify actual locations of connections before installation.

C. Examine walls, floors, roofs, and ceilings for suitable conditions where product will be installed.

D. Prepare written report, endorsed by Installer, listing conditions detrimental to performance of the Work.

E. Proceed with installation only after unsatisfactory conditions have been corrected.

3.2 DDC SYSTEM INTERFACE WITH OTHER SYSTEMS AND EQUIPMENT

A. Communication Interface to Equipment with Integral Controls:

1. DDC system shall have communication interface with equipment having integral controls and having a communication interface for remote monitoring or control.
2. Equipment to Be Connected:

a. Air-terminal units specified in Section 233600 "Air Terminal Units."
b. Boilers specified in Section 235216 "Condensing Boilers."
c. Chillers specified in Section 236423.16 "Water-Cooled, Scroll Water Chillers."
d. Chillers specified in Section 236426.13 "Air-Cooled, Rotary-Screw Water Chillers."
e. Cooling towers specified in Section 236513.13 "Open-Circuit, Forced-Draft Cooling Towers."
f. Cooling towers specified in Section 236513.16 "Closed-Circuit, Forced-Draft Cooling Towers."
g. Cooling towers specified in Section 236514.13 "Open-Circuit, Induced-Draft, Counterflow Cooling Towers."
h. Cooling towers specified in Section 236514.14 "Open-Circuit, Induced-Draft, Crossflow Cooling Towers."
i. Cooling towers specified in Section 236514.16 "Closed-Circuit, Induced-Draft, Counterflow Cooling Towers."
j. Cooling towers specified in Section 236514.17 "Closed-Circuit, Induced-Draft, Combined-Flow Cooling Towers."
k. Heat wheels and heat exchangers specified in Section 237223 "Air-to-Air Energy Recovery Equipment."
l. Air-handling units specified in Section 237313 "Modular Indoor Central-Station Air-Handling Units."
m. Roof-top units specified in Section 237413 "Packaged, Outdoor, Central-Station Air-Handling Units."
n. Dedicated outdoor-air units specified in Section 237433 "Dedicated Outdoor-Air Units."

o. Packaged terminal air-conditioners specified in Section 238113.11 "Packaged Terminal Air-Conditioners, Through-Wall Units."
p. Packaged terminal air-conditioners specified in Section 238113.12 "Packaged Terminal Air-Conditioners, Freestanding Units."
q. Packaged terminal air-conditioners specified in Section 238113.13 "Packaged Terminal Air-Conditioners, Outdoor, Wall-Mounted Units."
r. Fan-coil units specified in Section 238219 "Fan Coil Units."
s. Unit ventilators specified in Section 238223 "Unit Ventilators."
t. Wetted-element humidifiers specified in Section 238413.16 "Wetted-Element Humidifiers."
u. Atomizing humidifiers specified in Section 238413.19 "Atomizing Humidifiers."
v. Direct-steam-injection humidifiers specified in Section 238413.23 "Direct-Steam-Injection Humidifiers."
w. Self-contained steam humidifiers specified in Section 238413.29 "Self-Contained Steam Humidifiers."
x. Heat exchanger humidifiers specified in Section 238413.36 "Heat Exchanger Humidifiers."
y. Switchboards specified in Section 262300 "Low-Voltage Switchgear."
z. Motor-control centers specified in Section 262419 "Motor-Control Centers."
aa. Variable-frequency controllers specified in Section 262923 "Variable-Frequency Motor Controllers."
bb. Diesel emergency engine generators specified in Section 263213.13 "Diesel-Engine-Driven Generator Sets."
cc. Gaseous emergency engine generators specified in Section 263213.16 "Gas-Engine-Driven Generator Sets."
dd. Bi-fuel emergency engine generators specified in Section 263213.19 "Bi-Fuel-Engine-Driven Generator Sets."

B. Communication Interface to Other Building Systems:

1. DDC system shall have a communication interface with systems having a communication interface.
2. Systems to Be Connected:

a. Automated water treatment systems specified in Section 232500 "HVAC Water Treatment."
b. Power monitoring specified in Section 260913 "Electrical Power Monitoring and Control."
c. Lighting controls specified in Section 260926 "Lighting Control Panelboards."
d. Lighting controls specified in Section 260943.23 "Relay-Based Lighting Controls."
e. Fire-alarm system specified in Section 284621.11 "Addressable Fire-Alarm Systems."
f. Fire-alarm system specified in Section 284621.13 "Conventional Fire-Alarm Systems."

3.3 DDC SYSTEM INTERFACE WITH EXISTING SYSTEMS

A. Integration with Existing Enterprise System:

1. DDC system shall interface with an existing enterprise system to adhere to Owner standards already in-place and to achieve integration.
2. Owner's control system integrator will provide the following services:

a. Enterprise system expansion and development of graphics, logs, reports, trends and other operational capabilities of enterprise system for I/O being added to DDC control system for use by enterprise system operators.
b. Limited assistance during commissioning to extent of DDC system integration with existing enterprise system.
c. Prepare on-site demonstration mockup of integration of DDC system to be installed with existing system before installing DDC system.

3. Engage Owner's control system integrator to provide the following services:

   a. Enterprise system expansion and development of graphics, logs, reports, trends and other operational capabilities of enterprise system for I/O being added to DDC control system for use by enterprise system operators.
   b. Limited assistance during commissioning to extent of DDC system integration with existing enterprise system.
   c. Prepare on-site demonstration mockup of integration of DDC system to be installed with existing system before installing DDC system.

4. Attend meetings with control system integrator to integrate DDC system.

3.4 CONTROL DEVICES FOR INSTALLATION BY INSTALLERS

A. Deliver selected control devices, specified in indicated HVAC instrumentation and control device Sections, to identified equipment and systems manufacturers for factory installation and to identified installers for field installation.

B. Deliver the following to duct fabricator and Installer for installation in ductwork. Include installation instructions to Installer and supervise installation for compliance with requirements.

1. DDC control dampers, which are specified in Section 230923.12 "Control Dampers."
2. Airflow sensors and switches, which are specified in Section 230923.14 "Flow Instruments."
3. Pressure sensors, which are specified in Section 230923.23 "Pressure Instruments."

C. Deliver the following to plumbing and HVAC piping installers for installation in piping. Include installation instructions to Installer and supervise installation for compliance with requirements.

1. DDC control valves, which are specified in Section 230923.11 "Control Valves."
2. Pipe-mounted flow meters, which are specified in Section 230923.14 "Flow Instruments."
3. Pipe-mounted sensors, switches, and transmitters. Flow meters are specified in Section 230923.14 "Flow Instruments."
4. Tank-mounted sensors, switches, and transmitters. Pressure sensors, switches, and transmitters are specified in Section 230923.23 "Pressure Instruments."
5. Liquid and steam temperature sensors, switches, and transmitters are specified in Section 230923.27 "Temperature Instruments."
6. Pipe- and tank-mounted thermowells. Liquid and steam thermowells are specified in Section 230923.27 "Temperature Instruments."

3.5 CONTROL DEVICES FOR EQUIPMENT MANUFACTURER FACTORY INSTALLATION

A. Deliver the following to air-handling unit manufacturer for factory installation. Include installation instructions to air-handling unit manufacturer.

1. Programmable application or application-specific controller.
2. Unit-mounted DDC control dampers and actuators, which are specified in Section 230923.12 "Control Dampers."
3. Unit-mounted airflow sensors, switches, and transmitters, which are specified in Section 230923.14 "Flow Instruments."
4. Unit-mounted gas sensors, and transmitters, which are specified in Section 230923.16 "Gas Instruments."
5. Unit-mounted leak-detection switches, which are specified in Section 230923.18 "Leak Detection Instruments."

6. Unit-mounted pressure sensors, switches, and transmitters, which are specified in Section 230923.23 "Pressure Instruments."
7. Unit-mounted speed sensors, switches, and transmitters, which are specified in Section 230923.24 "Speed Instruments."
8. Unit-mounted temperature sensors, switches, and transmitters. Air-temperature sensors, switches, and transmitters are specified in Section 230923.27 "Temperature Instruments."
9. Relays.

B. Deliver the following to terminal unit manufacturer for factory installation. Include installation instructions to terminal unit manufacturer.

1. Programmable application or application-specific controller.
2. Electric damper actuator. Damper actuators are specified in Section 230923.12 "Control Dampers."
3. Unit-mounted flow and pressure sensors, transmitters, and transducers. Flow sensors, transmitters, and transducers are specified in Section 230923.14 "Flow Instruments." Pressure sensors, switches, and transmitters are specified in Section 230923.23 "Pressure Instruments."
4. Unit-mounted temperature sensors. Air-temperature sensors, switches, and transmitters are specified in Section 230923.27 "Temperature Instruments."
5. Relays.

C. Deliver the following to fan-coil unit manufacturer for factory installation. Include installation instructions to fan-coil unit manufacturer.

1. Programmable application or application-specific controller.
2. Unit-mounted temperature sensors. Air-temperature sensors, switches, and transmitters are specified in Section 230923.27 "Temperature Instruments."
3. Flow and pressure switches. Air and liquid flow sensors, transmitters, and transducers are specified in Section 230923.14 "Flow Instruments." Pressure sensors, switches, and transmitters are specified in Section 230923.23 "Pressure Instruments."
4. Leak-detection switches, which are specified in Section 230923.18 "Leak Detection Instruments."
5. Relays.

3.6 GENERAL INSTALLATION REQUIREMENTS

A. Install products to satisfy more stringent of all requirements indicated.

B. Install products level, plumb, parallel, and perpendicular with building construction.

C. Support products, tubing, piping wiring and raceways. Brace products to prevent lateral movement and sway or a break in attachment when subjected to a force.

D. If codes and referenced standards are more stringent than requirements indicated, comply with requirements in codes and referenced standards.

E. Fabricate openings and install sleeves in ceilings, floors, roof, and walls required by installation of products. Before proceeding with drilling, punching, and cutting, check for concealed work to avoid damage. Patch, flash, grout, seal, and refinish openings to match adjacent condition.

F. Firestop Penetrations Made in Fire-Rated Assemblies: Comply with requirements in Section 078413 "Penetration Firestopping."

G. Seal penetrations made in acoustically rated assemblies. Comply with requirements in Section 079200 "Joint Sealants."

H. Welding Requirements:

1. Restrict welding and burning to supports and bracing.
2. No equipment shall be cut or welded without approval. Welding or cutting will not be approved if there is risk of damage to adjacent Work.
3. Welding, where approved, shall be by inert-gas electric arc process and shall be performed by qualified welders according to applicable welding codes.
4. If requested on-site, show satisfactory evidence of welder certificates indicating ability to perform welding work intended.

I. Fastening Hardware:

1. Stillson wrenches, pliers, and other tools that damage surfaces of rods, nuts, and other parts are prohibited for work of assembling and tightening fasteners.
2. Tighten bolts and nuts firmly and uniformly. Do not overstress threads by excessive force or by oversized wrenches.
3. Lubricate threads of bolts, nuts and screws with graphite and oil before assembly.

J. If product locations are not indicated, install products in locations that are accessible and that will permit service and maintenance from floor, equipment platforms, or catwalks without removal of permanently installed furniture and equipment.

K. Corrosive Environments:

1. Avoid or limit use of materials in corrosive airstreams and environments, including, but not limited to, the following:

   a. Laboratory exhaust-air streams.
   b. Process exhaust-air streams.

2. When conduit is in contact with a corrosive airstream and environment, use Type 316 stainless steel conduit and fittings or conduit and fittings that are coated with a corrosive-resistant coating that is suitable for environment. Comply with requirements for installation of raceways and boxes specified in Section 260533 "Raceways and Boxes for Electrical Systems."
3. Where instruments are located in a corrosive airstream and are not corrosive resistant from manufacturer, field install products in NEMA 250, Type 4X enclosure constructed of Type 316L stainless steel.

3.7 WORKSTATION INSTALLATION

A. Desktop Workstations Installation:

1. Install workstation(s) at location(s) directed by Owner.
2. Install multiple-receptacle power strip with cord for use in connecting multiple workstation components to a single duplex electrical power receptacle.
3. Install software on workstation(s) and verify software functions properly.
4. Develop Project-specific graphics, trends, reports, logs and historical database.
5. Power each workstation through a dedicated UPS unit. Locate UPS adjacent to workstation.

B. Portable Workstations Installation:

1. Turn over portable workstations to Owner at Substantial Completion.
2. Install software on workstation(s) and verify software functions properly.

C. Color Graphics Application:

1. Use system schematics indicated as starting point to create graphics.
2. Develop Project-specific library of symbols for representing system equipment and products.
3. Incorporate digital images of Project-completed installation into graphics where beneficial to enhance effect.
4. Submit sketch of graphic layout with description of all text for each graphic for Owner's review before creating graphic using graphics software.
5. Seek Owner input in graphics development once using graphics software.
6. Final editing shall be done on-site with Owner's review and feedback.
7. Refine graphics as necessary for Owner acceptance.
8. On receiving Owner acceptance, print a hard copy for inclusion in operation and maintenance manual. Prepare a scanned copy PDF file of each graphic and include with softcopy of DDC system operation and maintenance manual.

D. Wall-Mounted Portable Operator's Workstation Cabinet Installation:

1. Install wall-mounted portable operator's workstation cabinet(s) at location(s) indicated on Drawings.
2. Install wall-mounted portable operator's workstation cabinet(s) at following location(s) and at locations directed by Owner:

   a. Each mechanical room.
   b. Chiller room.
   c. Boiler room.

3. Connect each cabinet to 120-V, single-phase, 60Hz field power source, and install single gang electrical box with NEMA WD 6, Type 20R duplex receptacle and metal cover plate in cabinet. Comply with requirements in Section 262726 "Wiring Devices."
4. Connect each cabinet to Ethernet network and install an Ethernet network port for connection to portable operator workstation Ethernet cable. Comply with requirements in Section 271513 "Communications Copper Horizontal Cabling."

3.8 SERVER INSTALLATION

A. Install one server at location(s) directed by Owner.

B. Install number of servers required to suit requirements indicated. Review Project requirements and indicate layout of proposed location in Shop Drawings.

C. Install software indicated on server(s) and verify that software functions properly.

D. Develop Project-specific graphics, trends, reports, logs, and historical database.

E. Power servers through dedicated UPS unit. Locate UPS adjacent to server.

3.9 CONTROLLER INSTALLATION

A. Install controllers in enclosures to comply with indicated requirements.

B. Connect controllers to field power supply.

C. Install controller with latest version of applicable software and configure to execute requirements indicated.

D. Test and adjust controllers to verify operation of connected I/O to achieve performance indicated requirements while executing sequences of operation.

E. Installation of Network Controllers:

1. Quantity and location of network controllers shall be determined by DDC system manufacturer to satisfy requirements indicated.
2. Install controllers in a protected location that is easily accessible by operators.
3. Top of controller shall be within 72 inches of finished floor.

F. Installation of Programmable Application Controllers:

1. Quantity and location of programmable application controllers shall be determined by DDC system manufacturer to satisfy requirements indicated.
2. Install controllers in a protected location that is easily accessible by operators.
3. Top of controller shall be within 72 inches of finished floor.

G. Application-Specific Controllers:

1. Quantity and location of application-specific controllers shall be determined by DDC system manufacturer to satisfy requirements indicated.
2. For controllers not mounted directly on equipment being controlled, install controllers in a protected location that is easily accessible by operators.

3.10 ENCLOSURES INSTALLATION

A. Install the following items in enclosures, to comply with indicated requirements:

1. Gateways.
2. Routers.
3. Controllers.
4. Electrical power devices.
5. UPS units.
6. Relays.
7. Accessories.
8. Instruments.
9. Actuators

B. Attach wall-mounted enclosures to wall using the following types of steel struts:

1. For NEMA 250, Type 1 Enclosures: Use painted steel strut and hardware.
2. For NEMA 250, Type 4X Enclosures and Enclosures Located Outdoors: Use stainless steel strut and hardware.
3. Install plastic caps on exposed cut edges of strut.

C. Align top of adjacent enclosures.

D. Install floor-mounted enclosures located in mechanical equipment rooms on concrete housekeeping pads. Attach enclosure legs using stainlesssteel anchors.

E. Install continuous and fully accessible wireways to connect conduit, wire, and cable to multiple adjacent enclosures. Wireway used for application shall have protection equal to NEMA 250 rating of connected enclosures.

3.11 ELECTRIC POWER CONNECTIONS

A. Connect electrical power to DDC system products requiring electrical power connections.

B. Design of electrical power to products not indicated with electric power is delegated to DDC system provider and installing trade. Work shall comply with NFPA 70 and other requirements indicated.

C. Comply with requirements in Section 262816 "Enclosed Switches and Circuit Breakers" for electrical power circuit breakers.

D. Comply with requirements in Section 260519 "Low-Voltage Electrical Power Conductors and Cables" for electrical power conductors and cables.

E. Comply with requirements in Section 260533 "Raceways and Boxes for Electrical Systems" for electrical power raceways and boxes.

3.12 IDENTIFICATION

A. Identify system components, wiring, cabling, and terminals. Comply with requirements in Section 260553 "Identification for Electrical Systems" for identification products and installation.

B. Install laminated acrylic or melamine plastic signs with unique identification on face for each of the following:

1. Operator workstation.
2. Server.
3. Printer.
4. Router.
5. Protocol analyzer.
6. DDC controller.
7. Enclosure.
8. Electrical power device.
9. UPS unit.
10. Accessory.

C. Install unique instrument identification on face of each instrument connected to a DDC controller.

D. Install unique identification on face of each control damper and valve actuator connected to a DDC controller.

E. Where product is installed above accessible tile ceiling, also install matching identification on face of ceiling grid located directly below.

F. Where product is installed above an inaccessible ceiling, also install identification on face of access door directly below.

G. Warning Labels and Signs:

1. Shall be permanently attached to equipment that can be automatically started by DDC control system.
2. Shall be located in highly visible location near power service entry points.

3.13 NETWORK INSTALLATION

A. Install optical fiber cable when connecting between the following network devices and when located in different buildings on campus, or when distance between devices exceeds 330 Feet :

1. Operator workstations.
2. Operator workstations and network controllers.
3. Network controllers.

B. Install balanced twisted pair or optical fiber cable when connecting between the following network devices located in same building:

1. Operator workstations.
2. Operator workstations and network controllers.
3. Network controllers.

C. Install balanced twisted pair or copper cable (as required by equipment) when connecting between the following:

1. Gateways.
2. Gateways and network controllers or programmable application controllers.
3. Routers.
4. Routers and network controllers or programmable application controllers.
5. Network controllers and programmable application controllers.
6. Programmable application controllers.
7. Programmable application controllers and application-specific controllers.
8. Application-specific controllers.

D. Install cable in continuous raceway.

1. Where indicated on Drawings, cable trays may be used for copper cable in lieu of conduit.

3.14 NETWORK NAMING AND NUMBERING

A. Coordinate with Owner and provide unique naming and addressing for networks and devices.

B. ASHRAE 135 Networks:

1. MAC Address:

a. Every network device shall have an assigned and documented MAC address unique to its network.
b. Ethernet Networks: Document MAC address assigned at its creation.
c. ARCNET or MS/TP networks: Assign from 00 to 64.

2. Network Numbering:

a. Assign unique numbers to each new network.
b. Provide ability for changing network number through device switches or operator interface.
c. DDC system, with all possible connected LANs, can contain up to 65,534 unique networks.

3. Device Object Identifier Property Number:

a. Assign unique device object identifier property numbers or device instances for each device network.

b. Provide for future modification of device instance number by device switches or operator interface.
c. LAN shall support up to 4,194,302 unique devices.

4. Device Object Name Property Text:

a. Device object name property field shall support 32 minimum printable characters.
b. Assign unique device "Object Name" property names with plain-English descriptive names for each device.

1) Example 1: Device object name for device controlling boiler plant at Building 1000 would be "HW System B1000."
2) Example 2: Device object name for a VAV terminal unit controller could be "VAV unit 102".

5. Object Name Property Text for Other Than Device Objects:

a. Object name property field shall support 32 minimum printable characters.
b. Assign object name properties with plain-English names descriptive of application.

1) Example 1: "Zone 1 Temperature."
2) Example 2 "Fan Start and Stop."

6. Object Identifier Property Number for Other Than Device Objects:

a. Assign object identifier property numbers according to Drawings or tables indicated.
b. If not indicated, object identifier property numbers may be assigned at Installer's discretion but must be approved by Owner in advance, be documented and be unique for like object types within device.

3.15 CONTROL WIRE, CABLE AND RACEWAYS INSTALLATION

A. Comply with NECA 1.

B. Wire and Cable Installation:

1. Comply with installation requirements in Section 260523 "Control-Voltage Electrical Power Cables."
2. Comply with installation requirements in Section 271313 "Communications Copper Backbone Cabling."
3. Comply with installation requirements in Section 271513 "Communications Copper Horizontal Cabling."
4. Install cables with protective sheathing that is waterproof and capable of withstanding continuous temperatures of 90 deg C with no measurable effect on physical and electrical properties of cable.

a. Provide shielding to prevent interference and distortion from adjacent cables and equipment.

5. Terminate wiring in a junction box.

a. Clamp cable over jacket in junction box.
b. Individual conductors in the stripped section of the cable shall be slack between the clamping point and terminal block.

6. Terminate field wiring and cable not directly connected to instruments and control devices having integral wiring terminals using terminal blocks.

7. Install signal transmission components according to IEEE C2, REA Form 511a, NFPA 70, and as indicated.
8. Use shielded cable to transmitters.
9. Use shielded cable to temperature sensors.
10. Perform continuity and meager testing on wire and cable after installation.

C. Conduit Installation:

1. Comply with Section 260533 "Raceways and Boxes for Electrical Systems" for control-voltage conductors.
2. Comply with Section 270528 "Pathways for Communications Systems" for balanced twisted pair cabling and optical fiber installation.

3.16 OPTICAL FIBER CABLE SYSTEM INSTALLATION

A. Comply with installation requirements in Section 271323 "Communications Optical Fiber Backbone Cabling."

B. Comply with installation requirements in Section 271523 "Communications Optical Fiber Horizontal Cabling."

3.17 FIELD QUALITY CONTROL

A. Testing Agency: a qualified testing agency to perform tests and inspections.

B. Manufacturer's Field Service: Engage a factory-authorized service representative to test and inspect components, assemblies, and installations, including connections.

C. Testing:

1. Perform preinstallation, in-progress, and final tests, supplemented by additional tests, as necessary.
2. Preinstallation Cable Verification: Verify integrity and serviceability for new cable lengths before installation. This assurance may be provided by using vendor verification documents, testing, or other methods. As a minimum, furnish evidence of verification for cable attenuation and bandwidth parameters.
3. In-Progress Testing: Perform standard tests for correct pair identification and termination during installation to ensure proper installation and cable placement. Perform tests in addition to those specified if there is any reason to question condition of material furnished and installed. Testing accomplished is to be documented by agency conducting tests. Submit test results for Project record.
4. Final Testing: Perform final test of installed system to demonstrate acceptability as installed. Testing shall be performed according to a test plan supplied by DDC system manufacturer. Defective Work or material shall be corrected and retested. As a minimum, final testing for cable system, including spare cable, shall verify conformance of attenuation, length, and bandwidth parameters with performance indicated.
5. Test Equipment: Use an optical fiber time domain reflectometer for testing of length and optical connectivity.
6. Test Results: Record test results and submit copy of test results for Project record.

3.18 DDC SYSTEM I/O CHECKOUT PROCEDURES

A. Check installed products before continuity tests, leak tests and calibration.

B. Check instruments for proper location and accessibility.

C. Check instruments for proper installation on direction of flow, elevation, orientation, insertion depth, or other applicable considerations that will impact performance.

D. Check instrument tubing for proper isolation, fittings, slope, dirt legs, drains, material and support.

E. For pneumatic products, verify that air supply for each product is properly installed.

F. Control Damper Checkout:

1. Verify that control dampers are installed correctly for flow direction.
2. Verify that proper blade alignment, either parallel or opposed, has been provided.
3. Verify that damper frame attachment is properly secured and sealed.
4. Verify that damper actuator and linkage attachment is secure.
5. Verify that actuator wiring is complete, enclosed and connected to correct power source.
6. Verify that damper blade travel is unobstructed.

G. Control Valve Checkout:

1. Verify that control valves are installed correctly for flow direction.
2. Verify that valve body attachment is properly secured and sealed.
3. Verify that valve actuator and linkage attachment is secure.
4. Verify that actuator wiring is complete, enclosed and connected to correct power source.
5. Verify that valve ball, disc or plug travel is unobstructed.
6. After piping systems have been tested and put into service, but before insulating and balancing, inspect each valve for leaks. Adjust or replace packing to stop leaks. Replace the valve if leaks persist.

H. Instrument Checkout:

1. Verify that instrument is correctly installed for location, orientation, direction and operating clearances.
2. Verify that attachment is properly secured and sealed.
3. Verify that conduit connections are properly secured and sealed.
4. Verify that wiring is properly labeled with unique identification, correct type and size and is securely attached to proper terminals.
5. Inspect instrument tag against approved submittal.
6. For instruments with tubing connections, verify that tubing attachment is secure and isolation valves have been provided.
7. For flow instruments, verify that recommended upstream and downstream distances have been maintained.
8. For temperature instruments:

   a. Verify sensing element type and proper material.
   b. Verify length and insertion.

3.19 DDC SYSTEM I/O ADJUSTMENT, CALIBRATION AND TESTING:

A. Calibrate each instrument installed that is not factory calibrated and provided with calibration documentation.

B. Provide a written description of proposed field procedures and equipment for calibrating each type of instrument. Submit procedures before calibration and adjustment.

C. For each analog instrument, make a three-point test of calibration for both linearity and accuracy.

D. Equipment and procedures used for calibration shall comply with instrument manufacturer's written instructions.

E. Provide diagnostic and test equipment for calibration and adjustment.

F. Field instruments and equipment used to test and calibrate installed instruments shall have accuracy at least twice the instrument accuracy being calibrated. An installed instrument with an accuracy of 1 percent shall be checked by an instrument with an accuracy of 0.5 percent.

G. Calibrate each instrument according to instrument instruction manual supplied by manufacturer.

H. If after calibration indicated performance cannot be achieved, replace out-of-tolerance instruments.

I. Comply with field testing requirements and procedures indicated by ASHRAE's Guideline 11, "Field Testing of HVAC Control Components," in the absence of specific requirements, and to supplement requirements indicated.

J. Analog Signals:

1. Check analog voltage signals using a precision voltage meter at zero, 50, and 100 percent.
2. Check analog current signals using a precision current meter at zero, 50, and 100 percent.
3. Check resistance signals for temperature sensors at zero, 50, and 100 percent of operating span using a precision-resistant source.

K. Digital Signals:

1. Check digital signals using a jumper wire.
2. Check digital signals using an ohmmeter to test for contact making or breaking.

L. Control Dampers:

1. Stroke and adjust control dampers following manufacturer's recommended procedure, from 100 percent open to 100 percent closed and back to 100 percent open.
2. Check and document open and close cycle times for applications with a cycle time less than 30 seconds.
3. For control dampers equipped with positive position indication, check feedback signal at multiple positions to confirm proper position indication.

M. Control Valves:

1. Stroke and adjust control valves following manufacturer's recommended procedure, from 100 percent open to 100 percent closed and back to 100 percent open.
2. Check and document open and close cycle times for applications with a cycle time less than 30 seconds.
3. For control valves equipped with positive position indication, check feedback signal at multiple positions to confirm proper position indication.

N. Meters: Check sensors at zero, 50, and 100 percent of Project design values.

O. Sensors: Check sensors at zero, 50, and 100 percent of Project design values.

P. Switches: Calibrate switches to make or break contact at set points indicated.

Q. Transmitters:

1. Check and calibrate transmitters at zero, 50, and 100 percent of Project design values.
2. Calibrate resistance temperature transmitters at zero, 50, and 100 percent of span using a precision-resistant source.

3.20 DDC SYSTEM CONTROLLER CHECKOUT

A. Verify power supply.

1. Verify voltage, phase and hertz.
2. Verify that protection from power surges is installed and functioning.
3. Verify that ground fault protection is installed.
4. If applicable, verify if connected to UPS unit.
5. If applicable, verify if connected to a backup power source.
6. If applicable, verify that power conditioning units, transient voltage suppression and high-frequency noise filter units are installed.

B. Verify that wire and cabling is properly secured to terminals and labeled with unique identification.

C. Verify that spare I/O capacity is provided.

3.21 DDC CONTROLLER I/O CONTROL LOOP TESTS

A. Testing:

1. Test every I/O point connected to DDC controller to verify that safety and operating control set points are as indicated and as required to operate controlled system safely and at optimum performance.
2. Test every I/O point throughout its full operating range.
3. Test every control loop to verify operation is stable and accurate.
4. Adjust control loop proportional, integral and derivative settings to achieve optimum performance while complying with performance requirements indicated. Document testing of each control loop's precision and stability via trend logs.
5. Test and adjust every control loop for proper operation according to sequence of operation.
6. Test software and hardware interlocks for proper operation. Correct deficiencies.
7. Operate each analog point at the following:

    a. Upper quarter of range.
    b. Lower quarter of range.
    c. At midpoint of range.

8. Exercise each binary point.
9. For every I/O point in DDC system, read and record each value at operator workstation, at DDC controller and at field instrument simultaneously. Value displayed at operator workstation, at DDC controller and at field instrument shall match.
10. Prepare and submit a report documenting results for each I/O point in DDC system and include in each I/O point a description of corrective measures and adjustments made to achieve desire results.

3.22 DDC SYSTEM VALIDATION TESTS

A. Perform validation tests before requesting final review of system. Before beginning testing, first submit Pretest Checklist and Test Plan.

B. After approval of Test Plan, execute all tests and procedures indicated in plan.

C. After testing is complete, submit completed test checklist.

D. Pretest Checklist: Submit the following list with items checked off once verified:

1. Detailed explanation for any items that are not completed or verified.
2. Required mechanical installation work is successfully completed and HVAC equipment is working correctly.
3. HVAC equipment motors operate below full-load amperage ratings.
4. Required DDC system components, wiring, and accessories are installed.
5. Installed DDC system architecture matches approved Drawings.
6. Control electric power circuits operate at proper voltage and are free from faults.
7. Required surge protection is installed.
8. DDC system network communications function properly, including uploading and downloading programming changes.
9. Using BACnet protocol analyzer, verify that communications are error free.
10. Each controller's programming is backed up.
11. Equipment, products, tubing, wiring cable, and conduits are properly labeled.
12. All I/O points are programmed into controllers.
13. Testing, adjusting, and balancing work affecting controls is complete.
14. Dampers and actuators zero and span adjustments are set properly.
15. Each control damper and actuator goes to failed position on loss of power.
16. Valves and actuators zero and span adjustments are set properly.
17. Each control valve and actuator goes to failed position on loss of power.
18. Meter, sensor and transmitter readings are accurate and calibrated.
19. Control loops are tuned for smooth and stable operation.
20. View trend data where applicable.
21. Each controller works properly in standalone mode.
22. Safety controls and devices function properly.
23. Interfaces with fire-alarm system function properly.
24. Electrical interlocks function properly.
25. Operator workstations and other interfaces are delivered, all system and database software is installed, and graphic are created.
26. Record Drawings are completed.

E. Test Plan:

1. Prepare and submit a validation test plan including test procedures for performance validation tests.
2. Test plan shall address all specified functions of DDC system and sequences of operation.
3. Explain detailed actions and expected results to demonstrate compliance with requirements indicated.
4. Explain method for simulating necessary conditions of operation used to demonstrate performance.
5. Include a test checklist to be used to check and initial that each test has been successfully completed.
6. Submit test plan documentation 20 business days before start of tests.

F. Validation Test:

1. Verify operating performance of each I/O point in DDC system.

    a. Verify analog I/O points at operating value.
    b. Make adjustments to out-of-tolerance I/O points.

        1) Identify I/O points for future reference.
        2) Simulate abnormal conditions to demonstrate proper function of safety devices.

3) Replace instruments and controllers that cannot maintain performance indicated after adjustments.

2. Simulate conditions to demonstrate proper sequence of control.
3. Readjust settings to design values and observe ability of DDC system to establish desired conditions.
4. After 24 Hours following Initial Validation Test:

   a. Re-check I/O points that required corrections during initial test.
   b. Identify I/O points that still require additional correction and make corrections necessary to achieve desired results.

5. After 24 Hours of Second Validation Test:

   a. Re-check I/O points that required corrections during second test.
   b. Continue validation testing until I/O point is normal on two consecutive tests.

6. Completely check out, calibrate, and test all connected hardware and software to ensure that DDC system performs according to requirements indicated.
7. After validation testing is complete, prepare and submit a report indicating all I/O points that required correction and how many validation re-tests it took to pass. Identify adjustments made for each test and indicate instruments that were replaced.

G. DDC System Response Time Test:

1. Simulate HLC.

   a. Heavy load shall be an occurrence of 50 percent of total connected binary COV, one-half of which represent an "alarm" condition, and 50 percent of total connected analog COV, one-half of which represent an "alarm" condition, that are initiated simultaneously on a one-time basis.

2. Initiate 10 successive occurrences of HLC and measure response time to typical alarms and status changes.
3. Measure with a timer having at least 0.1-second resolution and 0.01 percent accuracy.
4. Purpose of test is to demonstrate DDC system, as follows:

   a. Reaction to COV and alarm conditions during HLC.
   b. Ability to update DDC system database during HLC.

5. Passing test is contingent on the following:

   a. Alarm reporting at printer beginning no more than two seconds after the initiation (time zero) of HLC.
   b. All alarms, both binary and analog, are reported and printed; none are lost.
   c. Compliance with response times specified.

6. Prepare and submit a report documenting HLC tested and results of test including time stamp and print out of all alarms.

H. DDC System Network Bandwidth Test:

1. Test network bandwidth usage on all DDC system networks to demonstrate bandwidth usage under DDC system normal operating conditions and under simulated HLC.
2. To pass, none of DDC system networks shall use more than 70 percent of available bandwidth under normal and HLC operation.

3.23 FINAL REVIEW

A. Submit written request to Architect and Construction Manager when DDC system is ready for final review. Written request shall state the following:

1. DDC system has been thoroughly inspected for compliance with contract documents and found to be in full compliance.
2. DDC system has been calibrated, adjusted and tested and found to comply with requirements of operational stability, accuracy, speed and other performance requirements indicated.
3. DDC system monitoring and control of HVAC systems results in operation according to sequences of operation indicated.
4. DDC system is complete and ready for final review.

B. Review by Construction Manager shall be made after receipt of written request. A field report shall be issued to document observations and deficiencies.

C. Take prompt action to remedy deficiencies indicated in field report and submit a second written request when all deficiencies have been corrected. Repeat process until no deficiencies are reported.

D. Should more than two reviews be required, DDC system manufacturer and Installer shall compensate entity performing review for total costs, labor and expenses, associated with third and subsequent reviews. Estimated cost of each review shall be submitted and approved by DDC system manufacturer and Installer before making the review.

E. Prepare and submit closeout submittals and begin procedures indicated in "Extended Operation Test" Article when no deficiencies are reported.

F. A part of DDC system final review shall include a demonstration to parties participating in final review.

1. Provide staff familiar with DDC system installed to demonstrate operation of DDC system during final review.
2. Provide testing equipment to demonstrate accuracy and other performance requirements of DDC system that is requested by reviewers during final review.
3. Demonstration shall include, but not be limited to, the following:

a. Accuracy and calibration of 20 I/O points randomly selected by reviewers. If review finds that some I/O points are not properly calibrated and not satisfying performance requirements indicated, additional I/O points may be selected by reviewers until total I/O points being reviewed that satisfy requirements equals quantity indicated.
b. HVAC equipment and system hardwired and software safeties and life-safety functions are operating according to sequence of operation. Up to 20 I/O points shall be randomly selected by reviewers. Additional I/O points may be selected by reviewers to discover problems with operation.
c. Correct sequence of operation after electrical power interruption and resumption after electrical power is restored for randomly selected HVAC systems.
d. Operation of randomly selected dampers and valves in normal-on, normal-off and failed positions.
e. Reporting of alarm conditions for randomly selected alarms, including different classes of alarms, to ensure that alarms are properly received by operators and operator workstations.
f. Trends, summaries, logs and reports set-up for Project.
g. For up to three HVAC systems randomly selected by reviewers, use graph trends to show that sequence of operation is executed in correct manner and that HVAC systems operate properly through complete sequence of operation including different modes of operations indicated. Show that control loops are stable and operating at set points and respond to changes in set point of 20 percent or more.

h. Software's ability to communicate with controllers, operator workstations, uploading and downloading of control programs.
i. Software's ability to edit control programs off-line.
j. Data entry to show Project-specific customizing capability including parameter changes.
k. Step through penetration tree, display all graphics, demonstrate dynamic update, and direct access to graphics.
l. Execution of digital and analog commands in graphic mode.
m. Spreadsheet and curve plot software and its integration with database.
n. Online user guide and help functions.
o. Multitasking by showing different operations occurring simultaneously on four quadrants of split screen.
p. System speed of response compared to requirements indicated.
q. For Each Network and Programmable Application Controller:

1) Memory: Programmed data, parameters, trend and alarm history collected during normal operation is not lost during power failure.
2) Operator Interface: Ability to connect directly to each type of digital controller with a portable workstation and mobile device. Show that maintenance personnel interface tools perform as indicated in manufacturer's technical literature.
3) Standalone Ability: Demonstrate that controllers provide stable and reliable standalone operation using default values or other method for values normally read over network.
4) Electric Power: Ability to disconnect any controller safely from its power source.
5) Wiring Labels: Match control drawings.
6) Network Communication: Ability to locate a controller's location on network and communication architecture matches Shop Drawings.
7) Nameplates and Tags: Accurate and permanently attached to control panel doors, instrument, actuators, and devices.

r. For Each Operator Workstation:

1) I/O points lists agree with naming conventions.
2) Graphics are complete.
3) UPS unit, if applicable, operates.

s. Communications and Interoperability: Demonstrate proper interoperability of data sharing, alarm and event management, trending, scheduling, and device and network management. Requirements must be met even if only one manufacturer's equipment is installed.

1) Data Presentation: On each operator workstation, demonstrate graphic display capabilities.
2) Reading of Any Property: Demonstrate ability to read and display any used readable object property of any device on network.
3) Set Point and Parameter Modifications: Show ability to modify set points and tuning parameters indicated. Modifications are made with messages and write services initiated by an operator using workstation graphics, or by completing a field in a menu with instructional text.
4) Peer-to-Peer Data Exchange: Network devices are installed and configured to perform without need for operator intervention to implement Project sequence of operation and to share global data.
5) Alarm and Event Management: Alarms and events are installed and prioritized according to Owner. Demonstrate that time delays and other logic are set up to avoid nuisance tripping. Show that operators with sufficient privileges are permitted.

6) Schedule Lists: Schedules are configured for start and stop, mode change, occupant overrides, and night setback as defined in sequence of operations.
7) Schedule Display and Modification: Ability to display any schedule with start and stop times for calendar year. Show that all calendar entries and schedules are modifiable from any connected operator workstation by an operator with sufficient privilege.
8) Archival Storage of Data: Data archiving is handled by operator workstation and server and local trend archiving and display is accomplished.
9) Modification of Trend Log Object Parameters: Operator with sufficient privilege can change logged data points, sampling rate, and trend duration.
10) Device and Network Management:

a) Display of network device status.
b) Display of BACnet Object Information.
c) Silencing devices transmitting erroneous data.
d) Time synchronization.
e) Remote device re-initialization.
f) Backup and restore network device programming and master database(s).
g) Configuration management of routers.

3.24 EXTENDED OPERATION TEST

A. Extended operation test is intended to simulate normal operation of DDC system by Owner.

B. Operate DDC system for an operating period of 14 consecutive calendar days following Substantial Completion. Coordinate exact start date of testing with Owner.

C. Provide an operator familiar with DDC system installed to man an operator workstation while on-site during eight hours of each normal business day occurring during operating period.

D. During operating period, DDC system shall demonstrate correct operation and accuracy of monitored and controlled points as well as operation capabilities of sequences, logs, trends, reports, specialized control algorithms, diagnostics, and other software indicated.

1. Correct defects of hardware and software when it occurs.

E. Definition of Failures and Downtime during Operating Period:

1. Failed I/O point constituting downtime is an I/O point failing to perform its intended function consistently and a point physically failed due to hardware and software.
2. Downtime is when any I/O point in DDC system is unable to fulfill its' required function.
3. Downtime shall be calculated as elapsed time between a detected point failure as confirmed by an operator and time point is restored to service.
4. Maximum time interval allowed between DDC system detection of failure occurrence and operator confirmation shall be 0.5 hours.
5. Downtime shall be logged in hours to nearest 0.1 hour.
6. Power outages shall not count as downtime, but shall suspend test hours unless systems are provided with UPS and served through a backup power source.
7. Hardware or software failures caused by power outages shall count as downtime.

F. During operating period, log downtime and operational problems are encountered.

1. Identify source of problem.
2. Provide written description of corrective action taken.

3. Record duration of downtime.
4. Maintain log showing the following:

    a. Time of occurrence.
    b. Description of each occurrence and pertinent written comments for reviewer to understand scope and extent of occurrence.
    c. Downtime for each failed I/O point.
    d. Running total of downtime and total time of I/O point after each problem has been restored.

5. Log shall be available to Owner for review at any time.

G. For DDC system to pass extended operation test, total downtime shall not exceed 2 percent of total point-hours during operating period.

1. Failure to comply with minimum requirements of passing at end of operating period indicated shall require that operating period be extended one consecutive day at a time until DDC system passes requirement.

H. Evaluation of DDC system passing test shall be based on the following calculation:

1. Downtime shall be counted on a point-hour basis where total number of DDC system point-hours is equal to total number of I/O points in DDC system multiplied by total number of hours during operating period.
2. One point-hour of downtime is one I/O point down for one hour. Three points down for five hours is a total of 15 point-hours of downtime. Four points down for one-half hour is 2 point-hours of downtime.
3. Example Calculation: Maximum allowable downtime for 30-day test when DDC system has 1000 total I/O points (combined analog and binary) and has passing score of 1 percent downtime is computed by 30 days x 24 h/day x 1000 points x 1 percent equals 7200 point-hours of maximum allowable downtime.

I. Prepare test and inspection reports.

3.25 ADJUSTING

A. Occupancy Adjustments: When requested within 12 months from date of Substantial Completion, provide on-site assistance in adjusting system to suit actual occupied conditions. Provide up to two visits to Project during other-than-normal occupancy hours for this purpose.

3.26 MAINTENANCE SERVICE

A. Maintenance Service: Beginning at Substantial Completion, maintenance service shall include 12 months' full maintenance by DDC system manufacturer's authorized service representative. Include monthly preventive maintenance, repair or replacement of worn or defective components, cleaning, calibration and adjusting as required for proper operation. Parts and supplies shall be manufacturer's authorized replacement parts and supplies.

3.27 SOFTWARE SERVICE AGREEMENT

A. Technical Support: Beginning at Substantial Completion, service agreement shall include software support for two year(s).

B. Upgrade Service: At Substantial Completion, update software to latest version. Install and progam software upgrades that become available within two year(s) from date of Substantial Completion. Upgrading software shall include operating system and new or revised licenses for using software.

1. Upgrade Notice: At least 30 days to allow Owner to schedule and access system and to upgrade computer equipment if necessary.

3.28 DEMONSTRATION

A. Engage a factory-authorized service representative with complete knowledge of Project-specific system installed to train Owner's maintenance personnel to adjust, operate, and maintain DDC system.

B. Extent of Training:

1. Base extent of training on scope and complexity of DDC system indicated and training requirements indicated. Provide extent of training required to satisfy requirements indicated even if more than minimum training requirements are indicated.
2. Inform Owner of anticipated training requirements if more than minimum training requirements are indicated.
3. Minimum Training Requirements:

a. Provide not less than 10 days of training total.
b. Stagger training over multiple training classes to accommodate Owner's requirements. All training shall occur before end of warranty period.
c. Total days of training shall be broken into not more than three separate training classes.
d. Each training class shall be not less than two consecutive day(s).

C. Training Schedule:

1. Schedule training with Owner 20 business days before expected Substantial Completion.
2. Schedule training to provide Owner with at least 15 business days of notice in advance of training.
3. Training shall occur within normal business hours at a mutually agreed on time. Unless otherwise agreed to, training shall occur Monday through Friday, except on U.S. Federal holidays, with two morning sessions and two afternoon sessions. Each morning session and afternoon session shall be split in half with 15 -minute break between sessions. Morning and afternoon sessions shall be separated by 60 -minute lunch period. Training, including breaks and excluding lunch period, shall not exceed eight hours per day.

4. Provide staggered training schedule as requested by Owner.

D. Training Attendee List and Sign-in Sheet:

1. Request from Owner in advance of training a proposed attendee list with name, phone number and e-mail address.
2. Provide a preprinted sign-in sheet for each training session with proposed attendees listed and no fewer than six blank spaces to add additional attendees.
3. Preprinted sign-in sheet shall include training session number, date and time, instructor name, phone number and e-mail address, and brief description of content to be covered during session. List attendees with columns for name, phone number, e-mail address and a column for attendee signature or initials.
4. Circulate sign-in sheet at beginning of each session and solicit attendees to sign or initial in applicable location.
5. At end of each training day, send Owner an e-mail with an attachment of scanned copy (PDF) of circulated sign-in sheet for each session.

E. Training Attendee Headcount:

1. Plan in advance of training for five attendees.
2. Make allowance for Owner to add up to two attendee(s) at time of training.
3. Headcount may vary depending on training content covered in session. Attendee access may be restricted to some training content for purposes of maintaining system security.

F. Training Attendee Prior Knowledge: For guidance in planning required training and instruction, assume attendees have the following:

1. High school education and degree.
2. Basic user knowledge of computers and office applications.
3. Basic knowledge of HVAC systems.
4. Basic knowledge of DDC systems.
5. Basic knowledge of DDC system and products installed.

G. Attendee Training Manuals:

1. Provide each attendee with a color hard copy of all training materials and visual presentations.
2. Hard-copy materials shall be organized in a three-ring binder with table of contents and individual divider tabs marked for each logical grouping of subject matter. Organize material to provide space for attendees to take handwritten notes within training manuals.
3. In addition to hard-copy materials included in training manual, provide each binder with a sleeve or pocket that includes a DVD or flash drive with PDF copy of all hard-copy materials.

H. Instructor Requirements:

1. One or multiple qualified instructors, as required, to provide training.
2. Instructors shall have not less than five years of providing instructional training on not less than five past projects with similar DDC system scope and complexity to DDC system installed.

I. Organization of Training Sessions:

1. Organize training sessions into logical groupings of technical content and to reflect different levels of operators having access to system. Plan training sessions to accommodate the following three levels of operators:

    a. Daily operators.
    b. Advanced operators.
    c. System managers and administrators.

2. Plan and organize training sessions to group training content to protect DDC system security. Some attendees may be restricted to some training sessions that cover restricted content for purposes of maintaining DDC system security.

J. Training Outline:

1. Submit training outline for Owner review at least 10 business day before scheduling training.
2. Outline shall include a detailed agenda for each training day that is broken down into each of four training sessions that day, training objectives for each training session and synopses for each lesson planned.

K. On-Site Training:

1. Owner will provide conditioned classroom or workspace with ample desks or tables, chairs, power and data connectivity for instructor and each attendee.

2. Instructor shall provide training materials, projector and other audiovisual equipment used in training.
3. Provide as much of training located on-site as deemed feasible and practical by Owner.
4. On-site training shall include regular walk-through tours, as required, to observe each unique product type installed with hands-on review of operation, calibration and service requirements.
5. Operator workstation provided with DDC system shall be used in training. If operator workstation is not indicated, provide a temporary workstation to convey training content.

L. Off-Site Training:

1. Provide conditioned training rooms and workspace with ample tables desks or tables, chairs, power and data connectivity for each attendee.
2. Provide capability to remotely access to Project DDC system for use in training.
3. Provide a workstation for use by each attendee.

M. Training Content for Daily Operators:

1. Basic operation of system.
2. Understanding DDC system architecture and configuration.
3. Understanding each unique product type installed including performance and service requirements for each.
4. Understanding operation of each system and equipment controlled by DDC system including sequences of operation, each unique control algorithm and each unique optimization routine.
5. Operating operator workstations, printers and other peripherals.
6. Logging on and off system.
7. Accessing graphics, reports and alarms.
8. Adjusting and changing set points and time schedules.
9. Recognizing DDC system malfunctions.
10. Understanding content of operation and maintenance manuals including control drawings.
11. Understanding physical location and placement of DDC controllers and I/O hardware.
12. Accessing data from DDC controllers.
13. Operating portable operator workstations.
14. Review of DDC testing results to establish basic understanding of DDC system operating performance and HVAC system limitations as of Substantial Completion.
15. Running each specified report and log.
16. Displaying and demonstrating each data entry to show Project-specific customizing capability. Demonstrating parameter changes.
17. Stepping through graphics penetration tree, displaying all graphics, demonstrating dynamic updating, and direct access to graphics.
18. Executing digital and analog commands in graphic mode.
19. Demonstrating control loop precision and stability via trend logs of I/O for not less than 10 percent of I/O installed.
20. Demonstrating DDC system performance through trend logs and command tracing.
21. Demonstrating scan, update, and alarm responsiveness.
22. Demonstrating spreadsheet and curve plot software, and its integration with database.
23. Demonstrating on-line user guide, and help function and mail facility.
24. Demonstrating multitasking by showing dynamic curve plot, and graphic construction operating simultaneously via split screen.
25. Demonstrating the following for HVAC systems and equipment controlled by DDC system:

    a. Operation of HVAC equipment in normal-off, -on and failed conditions while observing individual equipment, dampers and valves for correct position under each condition.
    b. For HVAC equipment with factory-installed software, show that integration into DDC system is able to communicate with DDC controllers or gateways, as applicable.
    c. Using graphed trends, show that sequence of operation is executed in correct manner, and HVAC systems operate properly through complete sequence of operation including seasonal

change, occupied and unoccupied modes, warm-up and cool-down cycles and other modes of operation indicated.

d. Hardware interlocks and safeties function properly and DDC system performs correct sequence of operation after electrical power interruption and resumption after power is restored.

e. Reporting of alarm conditions for each alarm, and confirm that alarms are received at assigned locations, including operator workstations.

f. Each control loop responds to set point adjustment and stabilizes within time period indicated.

g. Sharing of previously graphed trends of all control loops to demonstrate that each control loop is stable and set points are being maintained.

N. Training Content for Advanced Operators:

1. Making and changing workstation graphics.
2. Creating, deleting and modifying alarms including annunciation and routing.
3. Creating, deleting and modifying point trend logs including graphing and printing on an ad-hoc basis and operator-defined time intervals.
4. Creating, deleting and modifying reports.
5. Creating, deleting and modifying points.
6. Creating, deleting and modifying programming including ability to edit control programs off-line.
7. Creating, deleting and modifying system graphics and other types of displays.
8. Adding DDC controllers and other network communication devices such as gateways and routers.
9. Adding operator workstations.
10. Performing DDC system checkout and diagnostic procedures.
11. Performing DDC controllers operation and maintenance procedures.
12. Performing operator workstation operation and maintenance procedures.
13. Configuring DDC system hardware including controllers, workstations, communication devicesand I/O points.
14. Maintaining, calibrating, troubleshooting, diagnosing and repairing hardware.
15. Adjusting, calibrating and replacing DDC system components.

O. Training Content for System Managers and Administrators:

1. DDC system software maintenance and backups.
2. Uploading, downloading and off-line archiving of all DDC system software and databases.
3. Interface with Project-specific, third-party operator software.
4. Understanding password and security procedures.
5. Adding new operators and making modifications to existing operators.
6. Operator password assignments and modification.
7. Operator authority assignment and modification.
8. Workstation data segregation and modification.

P. Video of Training Sessions:

1. Provide a digital video and audio recording of each training session. Create a separate recording file for each session.
2. Stamp each recording file with training session number, session name and date.
3. Provide Owner with two copies of digital files on DVDs or flash drives for later reference and for use in future training.
4. Owner retains right to make additional copies for intended training purposes without having to pay royalties.

END OF SECTION 230923

SECTION 232123 - HYDRONIC PUMPS

PART 1 - GENERAL

1.1 RELATED DOCUMENTS

A. Drawings and general provisions of the Contract, including General and Supplementary Conditions and Division 01 Specification Sections, apply to this Section.

1.2 SUMMARY

A. Section Includes:

1. Close-coupled, in-line centrifugal pumps.
2. Close-coupled, end-suction centrifugal pumps.

1.3 DEFINITIONS

A. ECM: Electronically commutated motor.

B. EPDM: Ethylene propylene diene monomer.

C. EPR: Ethylene propylene rubber.

D. FKM: Fluoroelastomer polymer.

E. HI: Hydraulic Institute.

F. NBR: Nitrile rubber or Buna-N.

1.4 ACTION SUBMITTALS

A. Product Data: For each type of pump.

1. Include certified performance curves and rated capacities, operating characteristics, furnished specialties, final impeller dimensions, and accessories for each type of product indicated.
2. Indicate pump's operating point on curves.

B. Shop Drawings: For each pump.

1. Show pump layout and connections.
2. Include setting drawings with templates for installing foundation and anchor bolts and other anchorages.
3. Include diagrams for power, signal, and control wiring.

1.5 INFORMATIONAL SUBMITTALS

A. Coordination Drawings: Plans, or BIM model, drawn to scale, showing the items described in this Section, and coordinated with all building trades.

B. Field quality-control reports.

1.6 CLOSEOUT SUBMITTALS

A. Operation and Maintenance Data: For pumps to include in emergency, operation, and maintenance manuals.

1.7 MAINTENANCE MATERIAL SUBMITTALS

A. Furnish extra materials that match products installed and that are packaged with protective covering for storage and identified with labels describing contents.

1. Mechanical Seals: One mechanical seal(s) for each pump.

PART 2 - PRODUCTS

2.1 PERFORMANCE REQUIREMENTS

A. Electrical Components, Devices, and Accessories: Listed and labeled as defined in NFPA 70, by a qualified testing agency, and marked for intended location and application.

2.2 CLOSE-COUPLED, IN-LINE CENTRIFUGAL PUMPS

A. Manufacturers: Subject to compliance with requirements, provide products by one of the following:

1. Armstrong Pumps, Inc.
2. Aurora Pump; Pentair Ltd.
3. Bell & Gossett, a Xylem Brand.
4. Crane Pumps & Systems.
5. Grundfos Pumps Corporation.
6. ITT Corporation.
7. Mepco, LLC.
8. PACO Pumps; Grundfos Pumps Corporation, USA.
9. Patterson Pump Company; a Gorman-Rupp company.
10. Peerless Pump Company.
11. **TACO Comfort Solutions.**

B. Source Limitations: Obtain pumps from single source from single manufacturer.

C. Description: Factory-assembled and -tested, centrifugal, overhung-impeller, close-coupled, in-line pump as defined in HI 1.1-1.2 and HI 1.3; designed for installation with pump and motor shafts mounted horizontally or vertically.

D. Pump Construction:

1. Casing: Radially split, cast iron, with threaded gauge tappings at inlet and outlet , replaceable bronze wear rings, and threaded companion-flange connections.
2. Impeller: ASTM B584, cast bronze; statically and dynamically balanced, keyed to shaft, and secured with a locking cap screw. Impeller radius shall not exceed 85% of the pump's cutwater radius. For constant-speed pumps, trim impeller to match specified performance.
3. Pump Shaft Sleeve: Bronze Type 304 stainless steel.
4. Pump Stub Shaft: Type 304 Type 316 stainless steel.
5. Seal: Mechanical seal consisting of carbon rotating ring against a ceramic seat held by a stainless steel spring, and NBR EPDM FKM rubber bellows and gasket. Include water slinger on shaft between motor and seal.
6. Seal Flushing: Flush, cool, and lubricate pump seal by directing pump discharge water to flow over the seal.

E. Shaft Coupling: Rigid, axially-split spacer coupling to allow service of pump seal without disturbing pump or motor.

F. Motor: Comply with NEMA designation, temperature rating, service factor, and efficiency requirements for motors specified in Section 230513 "Common Motor Requirements for HVAC Equipment."

1. Enclosure : 1. Motors shall be dripproof, unless otherwise specified herein or indicated on the Drawings.
2. NEMA Premium Efficient motors as defined in NEMA MG 1.
3. Motor Sizes: Minimum size as indicated. If not indicated, large enough so driven load will not require motor to operate in service factor range above 1.0.
4. Controllers, Electrical Devices, and Wiring: Comply with requirements for electrical devices and connections specified in electrical Sections.
5. Variable-speed motor.

2.3 CLOSE-COUPLED, END-SUCTION CENTRIFUGAL PUMPS

A. Manufacturers: Subject to compliance with requirements, provide products by one of the following:

1. Armstrong Pumps, Inc.
2. Aurora Pump; Pentair Ltd.
3. Bell & Gossett, a Xylem Brand
4. ITT Corporation.
5. Patterson Pump Company; a Gorman-Rupp company.
6. Thrush Co. Inc.
7. **TACO Comfort Solutions.**

B. Source Limitations: Obtain pumps from single source from single manufacturer.

C. Description: Factory-assembled and -tested, centrifugal, overhung-impeller, close-coupled, end-suction pump as defined in HI 1.1-1.2 and HI 1.3; designed for installation with pump and motor shafts mounted horizontally.

D. Pump Construction:

1. Casing: Radially split, cast iron, with replaceable bronze wear rings, drain plug at bottom and air vent at top of volute, threaded gauge tappings at inlet and outlet, and flanged connections.

2. Impeller: ASTM B584, cast bronze; statically and dynamically balanced, keyed to shaft, and secured with a locking cap screw. Impeller radius shall not exceed 85% of the pump's cutwater radius. For constant-speed pumps, trim impeller to match specified performance.
3. Pump Shaft Sleeve: Bronze Type 304 stainless steel.
4. Pump Stub Shaft: Type 304 Type 316 stainless steel.
5. Seal: Mechanical seal consisting of carbon rotating ring against a ceramic seat held by a stainless steel spring, and NBR EPDM FKM bellows and gasket. Include water slinger on shaft between motor and seal.

E. Motor: Comply with NEMA designation, temperature rating, service factor, and efficiency requirements for motors specified in Section 230513 "Common Motor Requirements for HVAC Equipment."

1. Enclosure: Motors shall be dripproof, unless otherwise specified herein or indicated on the Drawings.
2. NEMA Premium Efficient motors as defined in NEMA MG 1.
3. Motor Sizes: Minimum size as indicated. If not indicated, large enough so driven load will not require motor to operate in service factor range above 1.0.
4. Controllers, Electrical Devices, and Wiring: Comply with requirements for electrical devices and connections specified in electrical Sections.
5. Variable-speed motor.

F. Capacities and Characteristics:

1. Capacity: See Drawings.

2.4 PUMP SPECIALTY FITTINGS

A. Suction Diffuser:

1. Angle pattern.
2. 175-psig pressure rating, cast ductile-iron body and end cap, pump-inlet fitting.
3. Bronze 16-mesh wire startup and Type 304 stainless steel permanent strainers with 3/16-inch.
4. Type 304 stainless steel straightening vanes.
5. Drain plug.
6. Factory-fabricated support.

2.5 ELECTRONICALLY COMMUTATED MOTOR (ECM)

A. Provide pumps so they are specified or scheduled with ECM.

1. Synchronous, constant torque, ECM with permanent magnet rotor. Rotor magnets to be time-stable, nontoxic ceramic magnets (Sr-Fe).
2. Driven by a frequency converter with an integrated power factor correction filter. Conventional induction motors will not be acceptable.
3. Each motor with an integrated variable-frequency drive, tested as one unit by manufacturer.
4. Motor speed adjustable over full range from 0 rpm to maximum scheduled speed.
5. Variable motor speed to be controlled by a 0- to 10 V-dc or 4- to 20-mA input.
6. Integrated motor protection verified by UL to protect the pump against over-/undervoltage, overtemperature of motor and/or electronics, overcurrent, locked rotor, and dry run (no-load condition).

PART 3 - EXECUTION

3.1 EXAMINATION

A. Examine equipment foundations and anchor-bolt locations for compliance with requirements for installation tolerances and other conditions affecting performance of the Work.

B. Examine roughing-in for piping systems to verify actual locations of piping connections before pump installation.

C. Examine foundations and inertia bases for suitable conditions where pumps will be installed.

D. Proceed with installation only after unsatisfactory conditions have been corrected.

3.2 PUMP INSTALLATION

A. Comply with HI 1.4 and HI 2.4.

B. Install pumps to provide access for periodic maintenance including removing motors, impellers, couplings, and accessories.

C. Independently support pumps and piping so weight of piping is not supported by pumps and weight of pumps is not supported by piping.

D. Automatic Condensate Pump Units: Install units for collecting condensate and extend to open drain.

E. Equipment Mounting:

1. Comply with requirements for vibration isolation and seismic-control devices specified in Section 230548 "Vibration and Seismic Controls for HVAC."
2. Comply with requirements for vibration isolation devices specified in Section 230548.13 "Vibration Controls for HVAC."

F. Equipment Mounting: Install in-line pumps with continuous-thread hanger rods and spring hangers of size required to support weight of in-line pumps.

1. Comply with requirements for seismic-restraint devices specified in Section 230548 "Vibration and Seismic Controls for HVAC."
2. Comply with requirements for hangers and supports specified in Section 230529 "Hangers and Supports for HVAC Piping and Equipment."

3.3 ALIGNMENT

A. Engage a factory-authorized service representative to perform alignment service.

B. Comply with requirements in HI standards for alignment of pump and motor shaft. Add shims to the motor feet and bolt motor to base frame. Do not use grout between motor feet and base frame.

C. Comply with pump and coupling manufacturers' written instructions.

D. After alignment is correct, tighten foundation bolts evenly but not too firmly. Completely fill baseplate with nonshrink, nonmetallic grout while metal blocks and shims or wedges are in place. After grout has cured, fully tighten foundation bolts.

3.4 PIPING CONNECTIONS

A. Comply with requirements for piping specified in Section 232213 "Steam and Condensate Heating Piping" and Section 232216 "Steam and Condensate Piping Specialties." Drawings indicate general arrangement of piping, fittings, and specialties.

B. Where installing piping adjacent to pump, allow space for service and maintenance.

C. Connect piping to pumps. Install valves that are same size as piping connected to pumps.

D. Install suction and discharge pipe sizes equal to or greater than diameter of pump nozzles.

E. Install suction diffuser and shutoff valve on suction side of pumps.

1. Use startup strainer for initial system startup. Install permanent strainer element before turnover of system to Owner.

F. Install pressure gauges on pump suction and discharge or at integral pressure-gauge tapping, or install single gauge with multiple-input selector valve.

G. Install check valve on each condensate pump unit discharge unless unit has a factory-installed check valve.

3.5 ELECTRICAL CONNECTIONS

A. Connect wiring in accordance with Section 260519 "Low-Voltage Electrical Power Conductors and Cables."

B. Ground equipment in accordance with Section 260526 "Grounding and Bonding for Electrical Systems."

C. Install electrical devices furnished by manufacturer, but not factory mounted, in accordance with NFPA 70 and NECA 1.

D. Install nameplate for each electrical connection, indicating electrical equipment designation and circuit number feeding connection.

1. Nameplate shall be laminated acrylic or melamine plastic signs, as specified in Section 260553 "Identification for Electrical Systems."
2. Nameplate shall be laminated acrylic or melamine plastic signs with a black background and engraved white letters at least 1/2 inch high.

3.6 CONTROL CONNECTIONS

A. Install control and electrical power wiring to field-mounted control devices.

B. Connect control wiring in accordance with Section 260523 "Control-Voltage Electrical Power Cables."

3.7 STARTUP SERVICE

A. Perform startup service.

1. Complete installation and startup checks in accordance with manufacturer's written instructions.
2. Check piping connections for tightness.
3. Clean strainers on suction piping. Use startup strainer for initial startup.
4. Perform the following startup checks for each pump before starting:

    a. Verify bearing lubrication.
    b. Verify that pump is free to rotate by hand and that pump for handling hot liquid is free to rotate with pump hot and cold. If pump is bound or drags, do not operate until cause of trouble is determined and corrected.
    c. Verify that pump is rotating in correct direction.

5. Prime pump by opening suction valves and closing drains, and prepare pump for operation.
6. Start motor.
7. Open discharge valve slowly.

3.8 FIELD QUALITY CONTROL

A. Testing Agency: a qualified testing agency to perform tests and inspections.

B. Perform tests and inspections.

C. Hydronic pumps will be considered defective if they do not pass tests and inspections.

D. Prepare test and inspection reports.

3.9 DEMONSTRATION

A. Engage a factory-authorized service representative to train Owner's maintenance personnel to adjust, operate, and maintain hydronic pumps.

END OF SECTION 232123

SECTION 235216 - CONDENSING BOILERS

PART 1 - GENERAL

1.1 RELATED DOCUMENTS

A. Drawings and general provisions of the Contract, including General and Supplementary Conditions and Division 01 Specification Sections, apply to this Section.

1.2 SUMMARY

A. Section includes gas-fired, fire-tube floor-mounted condensing boilers, trim, and accessories for generating hot water.

1.3 ACTION SUBMITTALS

A. Product Data: For each type of product.

1. Include construction details, material descriptions, dimensions of individual components and profiles, and finishes for boilers.
2. Include rated capacities, operating characteristics, and furnished specialties and accessories.

B. Sustainable Design Submittals:

1. Product data showing compliance with ASHRAE 90.1.

C. Shop Drawings: For boilers, boiler trim, and accessories.

1. Include plans, elevations, sections, and mounting details.
2. Include details of equipment assemblies. Indicate dimensions, weights, loads, required clearances, method of field assembly, components, and location and size of each field connection.
3. Include diagrams for power, signal, and control wiring.

1.4 INFORMATIONAL SUBMITTALS

A. Coordination Drawings: Plans and sections, drawn to scale and coordinated with each other, using input from installers of the items involved.

B. Product Certificates:

1. ASME Stamp Certification and Report: Submit "A," "S," or "PP" stamp certificate of authorization, as required by authorities having jurisdiction, and document hydrostatic testing of piping external to boiler.

1.5 CLOSEOUT SUBMITTALS

A. Operation and Maintenance Data: For boilers to include in emergency, operation, and maintenance manuals.

1.6 WARRANTY

A. Manufacturer's Warranty: Manufacturer agrees to repair or replace components of boilers that fail in materials or workmanship within specified warranty period. Where "prorated" is indicated, the boiler manufacturer will cover the indicated percentage of cost of replacement parts. With "prorated" type, covered cost decreases as age of equipment increases.

1. Warranty Period for Floor-Mounted Fire-Tube Condensing Boilers:

a. Heat Exchanger and Tank: Free from defects in material and workmanship.
b. Warranty Coverage: for 10 years from date of Substantial Completion.

PART 2 - PRODUCTS

2.1 PERFORMANCE REQUIREMENTS

A. Electrical Components, Devices, and Accessories: Listed and labeled as defined in NFPA 70, by a qualified testing agency, and marked for intended location and application.

B. ASME Compliance: Fabricate and label boilers to comply with ASME Boiler and Pressure Vessel Code.

C. ASHRAE/IES 90.1 Compliance: Boilers shall have minimum efficiency in accordance with Table 6.8.1-6 and other requirements in Ch. 6 of ASHRAE/IES 90.1.

D. ASHRAE 90.2 Compliance: Boilers shall have minimum efficiency in accordance with Ch. 6 of ASHRAE 90.2.

E. DOE Compliance: Minimum efficiency shall comply with 10 CFR 431, Subpart E, Appendix N.

F. Mounting Base: For securing boiler to concrete base.

1. Seismic Fabrication Requirements: Fabricate mounting base and attachment to boiler pressure vessel, accessories, and components with reinforcement strong enough to withstand seismic forces defined in Section 230548 "Vibration and Seismic Controls for HVAC" when mounting base is anchored to building structure.

2.2 FLOOR-MOUNTED, FORCED-DRAFT, FIRE-TUBE CONDENSING BOILERS

A. Manufacturers: Subject to compliance with requirements, undefined:

1. AERCO; A WATTS Brand.
2. Cleaver-Brooks.
3. Lochinvar, LLC.
4. **Laars.**

B. Description: Factory-fabricated, -assembled, and -tested, fire-tube, forced-draft, condensing boiler with heat exchanger sealed pressure tight, built on a steel base, including insulated jacket; flue-gas vent; combustion-air intake connections; water supply, return, and condensate drain connections; and controls. Units are to be for water-heating service only.

C. Heat Exchanger: Corrosion-resistant Type 316 stainless steel.

D. Combustion Chamber and Flue Pipes: Corrosion-resistant stainless steel.

E. Pressure Vessel: Carbon steel with welded heads and tube connections.

F. Burner: Natural gas, forced draft.

G. Blower: Centrifugal fan to operate during each burner-firing sequence and to prepurge and postpurge the combustion chamber.

1. Motors: Comply with NEMA designation, temperature rating, service factor, and efficiency requirements for motors specified in Section 230513 "Common Motor Requirements for HVAC Equipment."

a. Motor Sizes: Large enough so driven load will not require motor to operate in service factor range above 1.0.

H. Gas Train: Combination gas valve with manual shutoff and pressure regulator.

I. Ignition: Direct-spark ignition or silicone carbide hot-surface ignition with 100 percent main-valve shutoff and electronic flame supervision.

J. Casing:

1. Jacket: Sheet metal, with snap-in or interlocking closures.
2. Control Compartment Enclosures: NEMA 250, Type 1A.
3. Finish: Baked-enamel Powder-coated Stainless steel protective finish.
4. Insulation: Minimum 2-inch- thick, mineral-fiber polyurethane-foam insulation surrounding the heat exchanger.
5. Combustion-Air Connections: Inlet and vent duct collars.

2.3 TRIM - FOR HOT-WATER BOILERS

A. Include devices sized to comply with ASME B31.9.

B. Aquastat Controllers: Operating, firing rate, and high limit with manual reset.

C. Alarm bell with silence switch.

D. Boiler Air Vent: Manual.

E. Drain Valve: Minimum NPS 3/4 hose-end gate valve.

2.4 CONTROLS

A. Boiler operating controls shall include the following devices and features:

1. Control transformer.
2. Set-Point Adjust: All set points shall be adjustable.
3. Electric, factory-fabricated and factory-installed panel to modulate burner and control burner-firing rate to maintain space temperature in response to thermostat with heat anticipator located in heated space.

a. Include automatic, alternating-firing sequence for multiple boilers to ensure maximum system efficiency throughout the load range and to provide equal runtime for boilers.

4. Electric, factory-fabricated and panel to control burner-firing rate, to reset supply-water temperature inversely with outside-air temperature. At outside-air temperature, set supply-water temperature at outside-air temperature, set supply-water temperature at.

a. Include automatic, alternating-firing sequence for multiple boilers to ensure maximum system efficiency throughout the load range and to provide equal runtime for boilers.

B. Burner Operating Controls: To maintain safe operating conditions, burner safety controls limit burner operation.

1. High Cutoff: Manual reset stops burner if operating conditions rise above maximum boiler design temperature.
2. Low-Water Cutoff Switch: Electronic probe shall prevent burner operation on low water. Cutoff switch shall be manual -reset type.
3. Blocked Inlet Safety Switch: Manual-reset pressure switch factory mounted on boiler combustion-air inlet.
4. Audible Alarm: Factory mounted on control panel with silence switch; shall sound alarm for above conditions.

C. Building Automation System Interface: Factory install hardware and software to enable building automation system to monitor, control, and display boiler status and alarms.

1. Hardwired Points:

a. Monitoring: On/off status, common trouble alarm low-water-level alarm.
b. Control: On/off operation, hot-water-supply temperature set-point adjustment.

2. A communication interface with building automation system shall enable building automation system operator to remotely control and monitor the boiler from an operator workstation. All monitoring and control features, which are available at the local boiler control panel, shall also be available at the remote operator workstation through the building automation system.

2.5 ELECTRICAL POWER

A. Controllers, Electrical Devices, and Wiring: Electrical devices and connections are shown on Drawings and specified in electrical Sections.

B. Single-Point Field Power Connection: Factory-installed and -wired switches, motor controllers, transformers, and other electrical devices necessary shall provide a single-point field power connection to boiler.

1. House in NEMA 250, Type 1 enclosure.
2. Wiring shall be numbered and color coded to match wiring diagram.
3. Install factory wiring outside of an enclosure in a metal raceway.
4. Field power interface shall be to.
5. Provide branch power circuit to each motor and to controls with a disconnect switch or circuit breaker.
6. Provide each motor with overcurrent protection.

2.6 VENTING KITS

A. Kit: Complete system, ASTM A959, Type 29-4C stainless steel pipe, vent terminal, thimble, indoor plate, vent adapter, condensate trap and dilution tank, and sealant.

B. Combustion-Air Intake: Complete system, stainless steel pipe, vent terminal with screen, inlet air coupling, and sealant.

2.7 CONDENSATE-NEUTRALIZATION UNITS

A. Manufacturers: Subject to compliance with requirements, provide products by one of the following:

1. Neutra-Safe Corporation.
2. SFA Saniflo USA.
3. Skidmore Pump.
4. Wessels Company.

B. Description: Factory-fabricated and -assembled condensate-neutralizing tank assembly of corrosion-resistant plastic material with threaded or flanged inlet and outlet pipe connections. Device functions to prevent acidic condensate from damaging grain system. It is to be piped to receive acidic condensate discharged from condensing boiler and neutralize it by chemical reaction with replaceable neutralizing agent. Neutralized condensate is then piped to suitable drain.

C. Tank features:

1. All corrosion-resistant material.
2. Suitable for use on all natural gas and propane boilers.
3. Includes initial charge of neutralizing agent.
4. Neutralizing agent to be easily replaceable when exhausted.
5. Inlet and outlet pipe connections.

D. Capsule Configuration:

1. Low-profile design for applications where boiler condensate drain is close to the floor.
2. Easily removed and opened for neutralizing agent replacement.
3. Multiple units may be used for larger capacity.

E. Tank Configuration:

1. Utilized where boiler is elevated or where tank is installed in a pit with tank top flush with floor.
2. Top easily removed for neutralizing agent replacement.
3. Internal baffles to channel flow for complete neutralization.
4. Integral bypass to prevent condensate backflow into appliance.
5. Multiple units may be used for larger capacity.

PART 3 - EXECUTION

3.1 EXAMINATION

A. Examine roughing-in for concrete equipment bases, anchor-bolt sizes and locations, and piping and electrical connections to verify actual locations, sizes, and other conditions affecting performance of the Work.

1. Final boiler locations indicated on Drawings are approximate. Determine exact locations before roughing-in for piping and electrical connections.

B. Examine mechanical spaces for suitable conditions where boilers will be installed.

C. Proceed with installation only after unsatisfactory conditions have been corrected.

3.2 BOILER INSTALLATION

A. Equipment Mounting:

1. Install floor-mounted boilers on cast-in-place concrete equipment base(s). Comply with requirements for equipment bases and foundations specified in Section 033000 "Cast-in-Place Concrete."
2. Install wall-hung boilers where indicated on Drawings using suitable hangers. Comply with manufacturer's mounting instructions.
3. Comply with requirements for vibration isolation and seismic-restraint devices specified in Section 230548 "Vibration and Seismic Controls for HVAC."
4. Comply with requirements for vibration isolation devices specified in Section 230548.13 "Vibration Controls for HVAC."

B. Install gas-fired boilers according to NFPA 54.

C. Assemble and install boiler trim.

D. Install electrical devices furnished with boiler but not specified to be factory mounted.

E. Install control wiring to field-mounted electrical devices.

3.3 PIPING CONNECTIONS

A. Comply with requirements for hydronic piping specified in Section 232113 "Hydronic Piping."

B. Drawings indicate general arrangement of piping, fittings, and specialties.

C. When installing piping adjacent to boiler, allow space for service and maintenance of condensing boilers. Arrange piping for easy removal of condensing boilers.

D. Install condensate drain piping to condensate-neutralization unit and from neutralization unit to nearest floor drain. Piping shall be at least full size of connection. Install piping with a minimum of 2 percent downward slope in direction of flow.

E. Install condensate piping from equipment drain connection to nearest floor drain. Piping shall be at least full size of connection. Install piping with a minimum of 2 percent downward slope in direction of flow.

F. Connect gas piping to boiler gas-train inlet with union. Piping shall be at least full size of gas-train connection. Provide a reducer if required.

G. Connect hot-water piping to supply- and return-boiler tappings with shutoff valve, and union or flange at each connection.

H. Install piping from safety relief valves to nearest floor drain.

3.4 DUCT CONNECTIONS

A. Boiler Venting:

1. Install flue-venting kit and combustion-air intake.
2. Comply with all boiler manufacturer's installation instructions.
3. Field fabricate and install boiler vent and combustion-air intake.
4. Utilize vent and intake duct material, size, and configuration as indicated in boiler manufacturer's instructions and to comply with UL 1738.
5. Comply with all boiler manufacturer's installation instructions.
6. Connect boiler vent full size to boiler connections.
7. Comply with requirements in Section 235123 "Gas Vents."
8. Comply with all boiler manufacturer's installation instructions.

3.5 ELECTRICAL CONNECTIONS

A. Connect wiring in accordance with Section 260519 "Low-Voltage Electrical Power Conductors and Cables."

B. Ground equipment according to Section 260526 "Grounding and Bonding for Electrical Systems."

C. Install electrical devices furnished by manufacturer, but not factory mounted, according to NFPA 70 and NECA 1.

D. Install nameplate for each electrical connection, indicating electrical equipment designation and circuit number feeding connection.

1. Nameplate shall be laminated acrylic or melamine plastic signs, as specified in Section 260553 "Identification for Electrical Systems."
2. Nameplate shall be laminated acrylic or melamine plastic signs with a black background and engraved white letters at least high.

3.6 CONTROL CONNECTIONS

A. Install control and electrical power wiring to field-mounted control devices.

B. Connect control wiring in accordance with Section 260523 "Control-Voltage Electrical Power Cables."

C. Install nameplate for each control connection, indicating field control panel designation and I/O control designation feeding connection.

1. Nameplate shall be laminated acrylic or melamine plastic signs, as specified in Section 260553 "Identification for Electrical Systems."
2. Nameplate shall be laminated acrylic or melamine plastic signs with a black background and engraved white letters at least high.

3.7 FIELD QUALITY CONTROL

A. Perform tests and inspections with the assistance of a factory-authorized service representative:

B. Tests and Inspections:

1. Perform installation and startup checks in accordance with manufacturer's written instructions.
2. Leak Test: Hydrostatic test. Repair leaks and retest until no leaks exist.
3. Operational Test: Start units to confirm proper motor rotation and unit operation. Adjust air-fuel ratio and combustion.
4. Test and adjust controls and safeties. Replace damaged and malfunctioning controls and equipment.

    a. Check and adjust initial operating set points and high- and low-limit safety set points of fuel supply, water level, and water temperature.
    b. Set field-adjustable switches and circuit-breaker trip ranges as indicated.

C. Boiler will be considered defective if it does not pass tests and inspections.

D. Prepare test and inspection reports.

E. Occupancy Adjustments: When requested within 12 months of date of Substantial Completion , provide on-site assistance in adjusting system to suit actual occupied conditions. Provide up to two visits to Project during other-than-normal occupancy hours for this purpose.

3.8 DEMONSTRATION

A. Engage a factory-authorized service representative to train Owner's maintenance personnel to adjust, operate, and maintain boilers. Refer to Section 017900 "Demonstration and Training." Video record the training sessions and provide electronic copy to Owner.

1. Instructor shall be factory trained and certified.
2. Provide not less than hours of training.
3. Train personnel in operation and maintenance and to obtain maximum efficiency in plant operation.
4. Provide instructional videos showing general operation and maintenance that are coordinated with operation and maintenance manuals.
5. Obtain Owner sign-off that training is complete.
6. Owner training shall be held at Project site.

END OF SECTION 235216

SECTION 238413.29 - SELF-CONTAINED STEAM HUMIDIFIERS

PART 1 - GENERAL

1.1 RELATED DOCUMENTS

A. Drawings and general provisions of the Contract, including General and Supplementary Conditions and Division 01 Specification Sections, apply to this Section.

1.2 SUMMARY

A. Section Includes:

1. Self-contained electric-resistance humidifiers.
2. Condensate drain coolers.

1.3 DEFINITIONS

A. Low Voltage: As defined in NFPA 70 for circuits and equipment operating at less than 50 V or for remote-control, signaling power-limited circuits.

1.4 ACTION SUBMITTALS

A. Product Data: For each type of product. Include rated capacities, operating characteristics, furnished specialties, and accessories.

B. Shop Drawings: Detail fabrication and installation of humidifiers. Include piping details, plans, elevations, sections, details of components, distributer tubes/manifolds, and attachments to other work.

1. Include diagrams for power, signal, and control wiring.

1.5 CLOSEOUT SUBMITTALS

A. Operation and Maintenance Data: For humidifiers to include in operation and maintenance manuals.

1.6 COORDINATION

A. Coordinate location and installation of humidifiers with distributer tubes/manifolds in ducts and plenums or occupied space. Revise locations and elevations to suit field conditions and to ensure proper humidifier operation.

PART 2 - PRODUCTS

2.1 PERFORMANCE REQUIREMENTS

A. Electrical Components, Devices, and Accessories: Listed and labeled as defined in NFPA 70, by a qualified testing agency, and marked for intended location and application.

B. Comply with AHRI 640.

C. Comply with UL 998.

D. Listed and labeled by ETL.

E. Surface-Burning Characteristics: Comply with ASTM E 84; testing by a qualified testing agency. Identify products with appropriate markings of applicable testing agency.

1. Flame-Spread Index: 25 or less.
2. Smoke-Developed Index: 50 or less.

2.2 SELF-CONTAINED ELECTRIC-RESISTANCE HUMIDIFIERS

A. Manufacturers: Subject to compliance with requirements, provide products by one of the following:

1. Armstrong International, Inc.
2. Carel USA, LLC.
3. DriSteem.
4. Nortec Industries Inc.

B. Water Type: Suitable for use with tap water.

C. Immersion Heating:

1. Evaporation Chamber: Cleanable stainless steel, Type 304 or stainless steel, Type 316.
2. Elements: Incoloy-sheathed or stainless-steel sheathed.

D. Cabinet:

1. Stainless-steel, factory-insulated for safe operating surface temperature, for housing heater cylinder, electrical wiring, components, controls, and control panel.
2. Hinged or removable cover, keyed to restrict unauthorized access.
3. Plumbing and electrical components housed in separate parts of the cabinet.
4. Threaded outlet in bottom of cabinet for drain piping.

E. Weatherproof Outdoor Enclosure: Insulated, with automatically controlled heating and ventilating system to maintain minimum operating conditions within the enclosure.

F. Control Panel:

1. Microprocessor-based control system for modulating control.
2. Factory-wired disconnect switch.
3. Liquid-crystal display.
4. Programmable keypad.
5. Low-voltage control circuit, with fused transformer.

6. Diagnostic, maintenance, alarm, and status features.
7. Safety switch interlocked to shut off heaters when cabinet is open.
8. Internal electrical controls prewired to appropriately marked terminals for field connection.
9. Electrical terminals for connection to each controlling device and alarm.
10. NEMA 250, Type 4X , to comply with environmental conditions at installed locations.
11. Material: Stainless steel.
12. Building Automation System Interface:
    a. Full Communication Interface: BACnet.

G. Controls:

1. Solenoid Fill Valve Maintains Water Level: Stainless steel , including fill tee with built-in air gap to prevent back siphoning. Include stainless-steel inlet strainer.
2. Field-adjustable timer to control drain cycle for flush duration and interval.
3. Controls shall drain tanks if no demand for humidification for more than 72 hours.
4. Set-point adjustment.
5. Stainless-steel float switches for water-level control.
6. Low-water switch shuts down heater to protect elements.
7. Over-temperature switch shuts down heater.
8. Aquastat maintains minimum water temperature in tank during short periods of no demand.
9. Foaming detection and correction.

H. Atmospheric Steam Distributer Tube(s): Multiple, atmospheric steam distributer tube extending across entire width of unit and equipped with mounting brackets on ends. Nozzles/metered orifices are spaced evenly along distributer tubes and provide dry and uniform steam distribution.

1. Material: Stainless steel, Type 316.
2. Insulation: Insulated.

I. Accessories:

1. Humidity Sensor: Return-duct mounted.
2. Duct-mounted, high-limit humidistat.
3. Airflow switch prevents humidifier operation without airflow.
4. Steam and Condensate Hoses: For interconnection of humidifier to distributer tube(s)/manifold.

2.3 CONDENSATE DRAIN COOLERS

A. Manufacturers: Subject to compliance with requirements, provide products by one of the following:

1. Armstrong International, Inc.
2. DriSteem.
3. Nortec Industries Inc.

B. Description: Mixes hot condensate with a cold water supply to reduce the drain temperature as required by state and local codes.

C. Cold Water Tempering Valve: Bronze body, 24 VAC electric-actuated with temperature sensor.

D. Drain Temperature Set-Point Range: Field adjustable between 115 deg F and 140 deg F. Drain sensor to control cold water tempering valve to limit drain discharge temperature to set point.

E. Reservoir Body Material: Stainless steel, Type 316.

F. Mounting: Suitable for wall mounting.

G. Vacuum breaker or air vent connection.

H. Condensate drain cooler built into the humidifier cabinet and offered as the humidifier manufacturer's standard product is acceptable in lieu of a separate product by the listed manufacturers.

PART 3 - EXECUTION

3.1 EXAMINATION

A. Examine ducts, air-handling units, and conditions for compliance with requirements for installation tolerances and other conditions affecting performance.

B. Examine roughing-in for piping systems to verify actual locations of piping connections before humidifier installation.

C. Proceed with installation only after unsatisfactory conditions have been corrected.

3.2 INSTALLATION

A. Install humidifiers with required clearance for service and maintenance.

B. Seal all duct and plenum penetrations with flange.

C. Install humidifier assemblies in metal ducts and casings constructed according to SMACNA's "HVAC Duct Construction Standards, Metal and Flexible."

D. Install stainless-steel drain pan under each manifold mounted in duct.

1. Construct drain pans with connection for drain; insulated.
2. Connect to condensate trap and drainage piping.
3. Extend drain pan upstream and downstream from tube(s)/manifold a minimum distance recommended by manufacturer but not less than required by ASHRAE 62.1.

E. Install tube(s)/manifold supply piping pitched to drain condensate back to humidifier or as recommended by manufacturer.

F. Equipment Mounting:

1. Install floor-mounted humidifiers on cast-in-place concrete equipment base(s). Comply with requirements for equipment bases and foundations specified in Section 033000 "Cast-in-Place Concrete."
2. Comply with requirements for vibration isolation and seismic control devices specified in Section 230548 "Vibration and Seismic Controls for HVAC."

G. Install all manufacturer-furnished accessories in accordance with manufacturer's written installation instructions.

3.3 PIPING CONNECTIONS

A. Piping installation requirements are specified in other Sections. Drawings indicate general arrangement of piping, fittings, and specialties.

1. Install piping adjacent to humidifiers to allow service and maintenance.
2. Install shutoff valve, strainer, backflow preventer, and union in humidifier makeup line.

B. Install piping specialties furnished by manufacturer but not factory mounted.

3.4 ELECTRICAL CONNECTIONS

A. Connect wiring according to Section 260519 "Low-Voltage Electrical Power Conductors and Cables."

B. Ground equipment according to Section 260526 "Grounding and Bonding for Electrical Systems."

C. Install nameplate for each electrical connection, indicating electrical equipment designation and circuit number feeding connection.

1. Nameplate shall be laminated acrylic or melamine plastic signs, as specified in Section 260553 "Identification for Electrical Systems."
2. Nameplate shall be laminated acrylic or melamine plastic signs with a black background and engraved white letters at least 1/2 inch high.
3. Locate nameplate where easily visible.

3.5 CONTROL CONNECTIONS

A. Install control and electrical power wiring to field-mounted control devices.

B. Connect control wiring between control devices.

C. Connect control wiring according to Section 260523 "Control Voltage Electrical Power Cables."

END OF SECTION 238413.29

SECTION 263600 - TRANSFER SWITCHES

PART 1 - GENERAL

1.1 RELATED DOCUMENTS

A. Drawings and general provisions of the Contract, including General and Supplementary Conditions and Division 01 Specification Sections, apply to this Section.

1.2 SUMMARY

A. Section Includes:

1. Contactor-type automatic transfer switches.
2. Nonautomatic transfer switches.
3. Transfer switch accessories.

1.3 ACTION SUBMITTALS

A. Product Data: For each type of product.

1. Include construction details, material descriptions, dimensions of individual components and profiles, and finishes for transfer switches.
2. Include rated capacities, operating characteristics, electrical characteristics, and accessories.

B. Shop Drawings:

1. Include plans, elevations, sections, details showing minimum clearances, conductor entry provisions, gutter space, and installed features and devices.
2. Include material lists for each switch specified.
3. Single-Line Diagram: Show connections between transfer switch, bypass/isolation switch, power sources, and load; and show interlocking provisions for each combined transfer switch and bypass/isolation switch.

1.4 INFORMATIONAL SUBMITTALS

A. Field quality-control reports.

1.5 CLOSEOUT SUBMITTALS

A. Operation and Maintenance Data: For each type of product to include in emergency, operation, and maintenance manuals.

1. In addition to items specified in Section 017823 "Operation and Maintenance Data," include the following:
   a. Features and operating sequences, both automatic and manual.
   b. List of all factory settings of relays; provide relay-setting and calibration instructions, including software, where applicable.

1.6 WARRANTY

A. Manufacturer's Warranty: Manufacturer agrees to repair or replace components of transfer switch or transfer switch components that fail in materials or workmanship within specified warranty period.

1. Warranty Period: Two years from date of Substantial Completion.

PART 2 - PRODUCTS

2.1 PERFORMANCE REQUIREMENTS

A. Electrical Components, Devices, and Accessories: Listed and labeled as defined in NFPA 70, by a qualified testing agency, and marked for intended location and application.

B. Comply with NEMA ICS 1.

C. Comply with NFPA 110.

D. Comply with UL 1008 unless requirements of these Specifications are stricter.

E. Indicated Current Ratings: Apply as defined in UL 1008 for continuous loading and total system transfer, including tungsten filament lamp loads not exceeding 30 percent of switch ampere rating, unless otherwise indicated.

F. Tested Fault-Current Closing and Short-Circuit Ratings: Adequate for duty imposed by protective devices at installation locations in Project under the fault conditions indicated, based on testing according to UL 1008.

1. Short-time withstand capability for three cycles.

G. Repetitive Accuracy of Solid-State Controls: All settings shall be plus or minus 2 percent or better over an operating temperature range of minus 20 to plus 70 deg C.

H. Resistance to Damage by Voltage Transients: Components shall meet or exceed voltage-surge withstand capability requirements when tested according to IEEE C62.62. Components shall meet or exceed voltage-impulse withstand test of NEMA ICS 1.

I. Electrical Operation: Accomplish by a nonfused, momentarily energized solenoid or electric-motor-operated mechanism. Switches for emergency or standby purposes shall be mechanically and electrically interlocked in both directions to prevent simultaneous connection to both power sources unless closed transition.

J. Neutral Switching: Where four-pole switches are indicated, provide neutral pole switched simultaneously with phase poles.

K. Annunciation, Control, and Programming Interface Components: Devices at transfer switches for communicating with remote programming devices, annunciators, or annunciator and control panels shall have communication capability matched with remote device.

L. Factory Wiring: Train and bundle factory wiring and label, consistent with Shop Drawings, by color-code or by numbered or lettered wire and cable shrinkable sleeve markers at terminations. Color-coding and wire and cable markers are specified in Section 260553 "Identification for Electrical Systems."

1. Designated Terminals: Pressure type, suitable for types and sizes of field wiring indicated.
2. Power-Terminal Arrangement and Field-Wiring Space: Suitable for top, side, or bottom entrance of feeder conductors as indicated.
3. Control Wiring: Equipped with lugs suitable for connection to terminal strips.
4. Accessible via front access.

M. Enclosures: General-purpose NEMA 250, Type 1 , complying with NEMA ICS 6 and UL 508, unless otherwise indicated.

2.2 CONTACTOR-TYPE AUTOMATIC TRANSFER SWITCHES

A. Manufacturers: Subject to compliance with requirements, provide products by one of the following:

1. ASCO Power Technologies.
2. Caterpillar, Inc.; Electric Power Division.
3. Cummins Power Generation.
4. Eaton.
5. Kohler Power Systems.
6. MTU America Inc.
7. Russelectric, Inc.

B. Comply with Level 1 equipment according to NFPA 110.

C. Switch Characteristics: Designed for continuous-duty repetitive transfer of full-rated current between active power sources.

1. Limitation: Switches using molded-case switches or circuit breakers or insulated-case circuit-breaker components are unacceptable.
2. Switch Action: Double throw; mechanically held in both directions.
3. Contacts: Silver composition or silver alloy for load-current switching. Contactor-style automatic transfer-switch units, rated 600 A and higher, shall have separate arcing contacts.
4. Conductor Connectors: Suitable for use with conductor material and sizes.
5. Material: Hard-drawn copper, 98 percent conductivity.
6. Main and Neutral Lugs: Compression type.
7. Ground Lugs and Bus-Configured Terminators: Compression type.
8. Connectors shall be marked for conductor size and type according to UL 1008.

D. Manual Switch Operation, Load-Breaking: Under load, with door closed and with either or both sources energized. Transfer time is same as for electrical operation. Control circuit automatically disconnects from electrical operator during manual operation.

E. Signal-Before-Transfer Contacts: A set of normally open/normally closed dry contacts operates in advance of retransfer to normal source. Interval shall be adjustable from 1 to 30 seconds.

F. Digital Communication Interface: Matched to capability of remote annunciator or annunciator and control panel.

G. Automatic Transfer-Switch Controller Features:

1. Controller operates through a period of loss of control power.
2. Undervoltage Sensing for Each Phase of Normal Source: Sense low phase-to-ground voltage on each phase. Pickup voltage shall be adjustable from 85 to 100 percent of nominal, and dropout voltage shall be adjustable from 75 to 98 percent of pickup value. Factory set for pickup at 90 percent and dropout at 85 percent.

3. Voltage/Frequency Lockout Relay: Prevent premature transfer to generator. Pickup voltage shall be adjustable from 85 to 100 percent of nominal. Factory set for pickup at 90 percent. Pickup frequency shall be adjustable from 90 to 100 percent of nominal. Factory set for pickup at 95 percent.
4. Time Delay for Retransfer to Normal Source: Adjustable from zero to 30 minutes, and factory set for 10 minutes. Override shall automatically defeat delay on loss of voltage or sustained undervoltage of emergency source, provided normal supply has been restored.
5. Test Switch: Simulate normal-source failure.
6. Switch-Position Pilot Lights: Indicate source to which load is connected.
7. Source-Available Indicating Lights: Supervise sources via transfer-switch normal- and emergency-source sensing circuits.
    a. Normal Power Supervision: Green light with nameplate engraved "Normal Source Available."
    b. Emergency Power Supervision: Red light with nameplate engraved "Emergency Source Available."
8. Unassigned Auxiliary Contacts: Two normally open, single-pole, double-throw contacts for each switch position, rated 10 A at 240-V ac.
9. Transfer Override Switch: Overrides automatic retransfer control so transfer switch will remain connected to emergency power source regardless of condition of normal source. Pilot light indicates override status.
10. Engine Shutdown Contacts:
    a. Time delay adjustable from zero to five minutes, and factory set for five minutes. Contacts shall initiate shutdown at remote engine-generator controls after retransfer of load to normal source.
11. Engine-Generator Exerciser: Solid-state, programmable-time switch starts engine generator and transfers load to it from normal source for a preset time, then retransfers and shuts down engine after a preset cool-down period. Initiates exercise cycle at preset intervals adjustable from 7 to 30 days. Running periods shall be adjustable from 10 to 30 minutes. Factory settings shall be for 7-day exercise cycle, 20-minute running period, and 5-minute cool-down period. Exerciser features include the following:
    a. Exerciser Transfer Selector Switch: Permits selection of exercise with and without load transfer.
    b. Push-button programming control with digital display of settings.
    c. Integral battery operation of time switch when normal control power is unavailable.

H. Large-Motor-Load Power Transfer:

1. In-Phase Monitor: Factory-wired, internal relay controls transfer so contacts close only when the two sources are synchronized in phase and frequency. Relay shall compare phase relationship and frequency difference between normal and emergency sources and initiate transfer when both sources are within 15 electrical degrees, and only if transfer can be completed within 60 electrical degrees. Transfer shall be initiated only if both sources are within 2 Hz of nominal frequency and 70 percent or more of nominal voltage.
2. Motor Disconnect and Timing Relay Controls: Designated starters in loss of power scenario shall disconnect motors before transfer and reconnect them selectively at an adjustable time interval after transfer. Control connection to motor starters shall be through wiring external to automatic transfer switch. Provide adjustable time delay between 1 and 60 seconds for reconnecting individual motor loads. Provide relay contacts rated for motor-control circuit inrush and for actual seal currents to be encountered.
3. Programmed Neutral Switch Position: Switch operator with programmed neutral position arranged to provide a midpoint between the two working switch positions, with an intentional, time-controlled pause at midpoint during transfer. Adjustable pause from 0.5 to 30 seconds minimum, and factory set for 0.5 second unless otherwise indicated. Time delay occurs for both transfer directions. Disable pause unless both sources are live.

2.3 NONAUTOMATIC TRANSFER SWITCHES

A. Manufacturers: Subject to compliance with requirements, provide products by one of the following:

1. ASCO Power Technologies.
2. Caterpillar, Inc.; Electric Power Division.
3. Eaton.
4. Russelectric, Inc.

B. Manual and Electrically Operated: Electrically actuated by push buttons designated "Normal Source" and "Alternative Source." Manual handle provides quick-make, quick-break manual-switching action. Switch shall be capable of electrically or manually transferring load in either direction with either or both sources energized. Control circuit disconnects from electrical operator during manual operation.

C. Double-Throw Switching Arrangement: Incapable of pauses or intermediate position stops during switching sequence.

D. Pilot Lights: Indicate source to which load is connected.

E. Source-Available Indicating Lights: Supervise sources via transfer-switch normal- and alternative-source sensing circuits.

1. Normal Power Supervision: Green light with nameplate engraved "Normal Source Available."
2. Emergency Power Supervision: Red light with nameplate engraved "Alternative Source Available."

F. Unassigned Auxiliary Contacts: Switch shall have one set of normally closed contacts for each switch position, rated 10 A at 240-V ac.

G. Switch Characteristics: Designed for continuous-duty repetitive transfer of full-rated current between active power sources.

1. Switch Action: Double throw; mechanically held in both directions.
2. Contacts: Silver composition or silver alloy for load-current switching.
3. Conductor Connectors: Suitable for use with conductor material and sizes.
4. Material: Hard-drawn copper, 98 percent conductivity.
5. Main and Neutral Lugs: Compression type.
6. Ground Lugs and Bus-Configured Terminators: Compression type.
7. Connectors shall be marked for conductor size and type according to UL 1008.

2.4 TRANSFER SWITCH ACCESSORIES

A. Remote Annunciator System:

1. Source Limitations: Same manufacturer as transfer switch in which installed.
2. Functional Description: Remote annunciator panel shall annunciate conditions for indicated transfer switches.
3. Annunciation panel display shall include the following indicators:
   a. Sources available, as defined by actual pickup and dropout settings of transfer-switch controls.
   b. Switch position.
   c. Switch in test mode.
   d. Failure of communication link.
4. Annunciator Panel: LED-lamp type with audible signal and silencing switch.

a. Indicating Lights: Grouped for each transfer switch monitored.
b. Label each group, indicating transfer switch it monitors, location of switch, and identity of load it serves.
c. Mounting: Flush, modular, steel cabinet unless otherwise indicated.
d. Lamp Test: Push-to-test or lamp-test switch on front panel.

B. Remote Annunciator and Control System:

1. Source Limitations: Same manufacturer as transfer switch in which installed.
2. Include the following functions for indicated transfer switches:
   a. Indication of sources available, as defined by actual pickup and dropout settings of transfer-switch controls.
   b. Indication of switch position.
   c. Indication of switch in test mode.
   d. Indication of failure of digital communication link.
   e. Key-switch or user-code access to control functions of panel.
   f. Control of switch-test initiation.
   g. Control of switch operation in either direction.
3. Malfunction of annunciator, annunciation and control panel, or communication link shall not affect functions of automatic transfer switch. In the event of failure of communication link, automatic transfer switch automatically shall revert to standalone, self-contained operation. Automatic transfer-switch sensing, controlling, or operating function shall not depend on remote panel for proper operation.
4. Remote Annunciation and Control Panel: Solid-state components. Include the following features:
   a. Controls and indicating lights grouped together for each transfer switch.
   b. Label each indicating light control group. Indicate transfer switch it controls, location of switch, and load it serves.
   c. Digital Communication Capability: Matched to that of transfer switches supervised.
   d. Mounting: Flush, modular, steel cabinet unless otherwise indicated.

PART 3 - EXECUTION

3.1 INSTALLATION

A. Annunciator and Control Panel Mounting: Flush in wall unless otherwise indicated.

B. Identify components according to Section 260553 "Identification for Electrical Systems."

C. Set field-adjustable intervals and delays, relays, and engine exerciser clock.

D. Comply with NECA 1.

3.2 CONNECTIONS

A. Wiring to Remote Components: Match type and number of cables and conductors to generator sets, control, and communication requirements of transfer switches as recommended by manufacturer. Increase raceway sizes at no additional cost to Owner if necessary to accommodate required wiring.

B. Wiring Method: Install cables in raceways and cable trays except within electrical enclosures. Conceal raceway and cables except in unfinished spaces.

1. Comply with requirements for raceways and boxes specified in **Section 260533.13 "Conduits for Electrical Systems" and 260533.16 "Boxes and Covers for Electrical Systems."** ~~Section 260533 "Raceways and Boxes for Electrical Systems."~~

C. Wiring within Enclosures: Bundle, lace, and train conductors to terminal points with no excess and without exceeding manufacturer's limitations on bending radii.

D. Ground equipment according to Section 260526 "Grounding and Bonding for Electrical Systems."

E. Connect wiring according to Section 260519 "Low-Voltage Electrical Power Conductors and Cables."

F. Connect twisted pair cable according to Section 260523 "Control-Voltage Electrical Power Cables."

G. Route and brace conductors according to manufacturer's written instructions and Section 260529 "Hangers and Supports for Electrical Systems." Do not obscure manufacturer's markings and labels.

~~H. Brace and support equipment according to Section 260548.16 "Seismic Controls for Electrical Systems."~~

I. Final connections to equipment shall be made with liquidtight, flexible metallic conduit no more than 18 inches in length.

3.3 FIELD QUALITY CONTROL

A. Administrant for Tests and Inspections:

1. Engage factory-authorized service representative to administer and perform tests and inspections on components, assemblies, and equipment installations, including connections.

B. Tests and Inspections:

1. After installing equipment, test for compliance with requirements according to NETA ATS.
2. Visual and Mechanical Inspection:
   a. Compare equipment nameplate data with Drawings and Specifications.
   b. Inspect physical and mechanical condition.
   c. Inspect anchorage, alignment, grounding, and required clearances.
   d. Verify that the unit is clean.
   e. Verify appropriate lubrication on moving current-carrying parts and on moving and sliding surfaces.
   f. Verify that manual transfer warnings are attached and visible.
   g. Verify tightness of all control connections.
   h. Inspect bolted electrical connections for high resistance using one of the following methods, or both:
      1) Use of low-resistance ohmmeter.
      2) Verify tightness of accessible bolted electrical connections by calibrated torque-wrench method according to manufacturer's published data.
   i. Perform manual transfer operation.
   j. Verify positive mechanical interlocking between normal and alternate sources.
   k. Perform visual and mechanical inspection of surge arresters.
   l. Inspect control power transformers.
      1) Inspect for physical damage, cracked insulation, broken leads, tightness of connections, defective wiring, and overall general condition.
      2) Verify that primary and secondary fuse or circuit-breaker ratings match Drawings.
      3) Verify correct functioning of drawout disconnecting contacts, grounding contacts, and interlocks.

3. Electrical Tests:
   a. Perform insulation-resistance tests on all control wiring with respect to ground.
   b. Perform a contact/pole-resistance test. Compare measured values with manufacturer's acceptable values.
   c. Verify settings and operation of control devices.
   d. Calibrate and set all relays and timers.
   e. Verify phase rotation, phasing, and synchronized operation.
   f. Perform automatic transfer tests.
   g. Verify correct operation and timing of the following functions:
      1) Normal source voltage-sensing and frequency-sensing relays.
      2) Engine start sequence.
      3) Time delay on transfer.
      4) Alternative source voltage-sensing and frequency-sensing relays.
      5) Automatic transfer operation.
      6) Interlocks and limit switch function.
      7) Time delay and retransfer on normal power restoration.
      8) Engine cool-down and shutdown feature.
4. Measure insulation resistance phase-to-phase and phase-to-ground with insulation-resistance tester. Include external annunciation and control circuits. Use test voltages and procedure recommended by manufacturer. Comply with manufacturer's specified minimum resistance.
   a. Check for electrical continuity of circuits and for short circuits.
   b. Inspect for physical damage, proper installation and connection, and integrity of barriers, covers, and safety features.
   c. Verify that manual transfer warnings are properly placed.
   d. Perform manual transfer operation.
5. After energizing circuits, perform each electrical test for transfer switches stated in NETA ATS and demonstrate interlocking sequence and operational function for each switch at least three times.
   a. Simulate power failures of normal source to automatic transfer switches and retransfer from emergency source with normal source available.
   b. Simulate loss of phase-to-ground voltage for each phase of normal source.
   c. Verify time-delay settings.
   d. Verify pickup and dropout voltages by data readout or inspection of control settings.
   e. Test bypass/isolation unit functional modes and related automatic transfer-switch operations.
   f. Perform contact-resistance test across main contacts and correct values exceeding 500 microhms and values for one pole deviating by more than 50 percent from other poles.
   g. Verify proper sequence and correct timing of automatic engine starting, transfer time delay, retransfer time delay on restoration of normal power, and engine cool-down and shutdown.
6. Ground-Fault Tests: Coordinate with testing of ground-fault protective devices for power delivery from both sources.
   a. Verify grounding connections and locations and ratings of sensors.

C. Coordinate tests with tests of generator and run them concurrently.

D. Report results of tests and inspections in writing. Record adjustable relay settings and measured insulation and contact resistances and time delays. Attach a label or tag to each tested component indicating satisfactory completion of tests.

E. Transfer switches will be considered defective if they do not pass tests and inspections.

F. Remove and replace malfunctioning units and retest as specified above.

G. Prepare test and inspection reports.

H. Infrared Scanning: After Substantial Completion, but not more than 60 days after Final Acceptance, perform an infrared scan of each switch. Remove all access panels so joints and connections are accessible to portable scanner.

1. Instrument: Use an infrared scanning device designed to measure temperature or to detect significant deviations from normal values. Provide calibration record for device.
2. Record of Infrared Scanning: Prepare a certified report that identifies switches checked and that describes scanning results. Include notation of deficiencies detected, remedial action taken, and observations after remedial action.
3. Follow-up Infrared Scanning: Perform an additional follow-up infrared scan of each switch 11 months after date of Substantial Completion.

3.4 DEMONSTRATION

A. Train Owner's maintenance personnel to adjust, operate, and maintain transfer switches and related equipment.

B. Training shall include testing ground-fault protective devices and instructions to determine when the ground-fault system shall be retested. Include instructions on where ground-fault sensors are located and how to avoid negating the ground-fault protection scheme during testing and circuit modifications.

C. Coordinate this training with that for generator equipment.

END OF SECTION 263600

SECTION 271323 - COMMUNICATIONS OPTICAL FIBER BACKBONE CABLING

PART 1 - GENERAL

1.1 RELATED DOCUMENTS

A. Drawings and general provisions of the Contract, including General and Supplementary Conditions and Division 01 Specification Sections, apply to this Section.

1.2 SUMMARY

A. Section Includes:

1. 850 nanometer laser-optimized 50/125 micrometer inside plant multimode optical fiber cable (OM4).
2. 9/125 micrometer single-mode, inside plant optical fiber cable (OS2).
3. 9/125 micrometer single-mode, indoor/outdoor plant optical fiber cable (OS2).
4. Optical fiber cable connecting hardware, patch panels, and cross-connects.
5. Cabling identification products.

1.3 DEFINITIONS

A. BICSI: Building Industry Consulting Service International.

B. Cross-Connect: A facility enabling the termination of cable elements and their interconnection or cross-connection.

C. RCDD: Registered Communications Distribution Designer.

1.4 OPTICAL FIBER BACKBONE CABLING DESCRIPTION

A. Optical fiber backbone cabling system shall provide interconnections between communications equipment rooms, main terminal space, and entrance facilities in the telecommunications cabling system structure. Cabling system consists of backbone cables, intermediate and main cross-connects, mechanical terminations, and patch cords or jumpers used for backbone-to-backbone cross-connection.

B. Backbone cabling cross-connects may be located in communications equipment rooms or at entrance facilities. Bridged taps and splitters shall not be used as part of backbone cabling.

1.5 ACTION SUBMITTALS

A. Product Data: For each type of product.

B. Shop Drawings: Reviewed and stamped by RCDD.

1. System Labeling Schedules: Electronic copy of labeling schedules, in software and format selected by Owner.

2. System Labeling Schedules: Electronic copy of labeling schedules that are part of the cabling and asset identification system of the software.
3. Cabling administration drawings and printouts.
4. Wiring diagrams to show typical wiring schematics including the following:

    a. Telecommunications rooms plans and elevations.
    b. Telecommunications pathways.
    c. Telecommunications system access points.
    d. Telecommunications grounding system.
    e. Cross-connects.
    f. Patch panels.
    g. Patch cords.

5. Cross-connects and patch panels. Detail mounting assemblies and show elevations and physical relationship between the installed components.

C. Optical fiber cable testing plan.

1.6 INFORMATIONAL SUBMITTALS

A. Qualification Data: For RCDD, Installer, installation supervisor, and field inspector.

B. Source quality-control reports.

C. Product Certificates: For each type of product.

D. Field quality-control reports.

1.7 CLOSEOUT SUBMITTALS

A. Maintenance Data: For optical fiber cable, splices, and connectors to include in maintenance manuals.

B. Contractor to submit all cable test results and any test documentation required prior to acceptance by the Owner.

C. Subsequent to the installation, and prior to acceptance of the work, the contractor shall prepare and issue record (as-built) drawings, in Adobe PDF and AutoCAD or BIM format, that reflect the lengths of cables installed, the actual manner and conditions of installation, including all deletions from, additions to or departures from the contract documents. These documents are to include the information outlet station numbers and cable routing where it varies from the original plan.

D. Provide cable termination schedules for all cables installed under the Work. Schedules shall be in printed form and on CD in Microsoft Excel format.

E. Provide Operation and Maintenance Manuals including wiring diagrams, parts list, shop drawings and manufacturers' information on all equipment and cables provided under this Work. Provide manuals within fifteen days of systems acceptance.

F. Upon completion of the work, the contractor shall coordinate with the manufacturer the issuance of a full warranty on the entire copper and fiber optic cable plant including the horizontal cabling for both parts and labor. The cabling contractor at his sole expense will correct any deficiencies determined by the manufacturer.

1.8 QUALITY ASSURANCE

A. Installer Qualifications: Cabling Installer must have personnel certified by BICSI on staff.

1. Layout Responsibility: Preparation of Shop Drawings, Cabling Administration Drawings, and field testing program development by an RCDD.
2. Installation Supervision: Installation shall be under the direct supervision of Technician, who shall be present at all times when Work of this Section is performed at Project site.
3. Testing Supervisor: Currently certified by BICSI as an RCDD to supervise on-site testing.

1.9 DELIVERY, STORAGE, AND HANDLING

A. Test cables upon receipt at Project site.

1. Test optical fiber cable to determine the continuity of the strand end to end. Use optical loss test set.
2. Test optical fiber cable while on reels. Use an optical time domain reflectometer to verify the cable length and locate cable defects, splices, and connector, including the loss value of each. Retain test data and include the record in maintenance data.

1.10 PROJECT CONDITIONS

A. Environmental Limitations: Do not deliver or install cables and connecting materials until wet work in spaces is complete and dry, and temporary HVAC system is operating and maintaining ambient temperature and humidity conditions at occupancy levels during the remainder of the construction period.

1.11 COORDINATION

A. Coordinate layout and installation of telecommunications pathways and cabling with Owner's telecommunications and LAN equipment and service suppliers.

PART 2 - PRODUCTS

2.1 PERFORMANCE REQUIREMENTS

A. General Performance: Backbone cabling system shall comply with transmission standards in TIA-568-C.1, when tested according to test procedures of this standard.

B. Surface-Burning Characteristics: As determined by testing identical products according to ASTM E 84 by a qualified testing agency. Identify products with appropriate markings of applicable testing agency.

1. Flame-Spread Index: 25 or less.
2. Smoke-Developed Index: 50 or less.

C. Telecommunications Pathways and Spaces: Comply with TIA-569-E.

D. Grounding: Comply with TIA-607-C.

2.2 850 NANOMETER LASER-OPTIMIZED, 50/125 MICROMETER, MULTIMODE INSIDE PLANT OPTICAL FIBER CABLE (OM4)

A. Description: Multimode, 50/125-micrometer, nonconductive, tight buffer, optical fiber cable. Number of strands as indicated on project drawings.

B. Manufacturers: Subject to compliance with requirements, provide products by one of the following:

1. Panduit Corp.
2. CommScope, Inc.
3. Corning Cable Systems.
4. Leviton / Berk-Tek

C. Standards:

1. Comply with ICEA S-83-596 for mechanical properties.
2. Comply with TIA-568-C.3 for performance specifications.
3. Comply with TIA-492AAAD for detailed specifications.

D. Maximum Attenuation: 3.0 dB/km at 850 nm; 1.5 dB/km at 1300 nm.

E. Minimum Overfilled Modal Bandwidth-length Product: 3500 MHz-km at 850 nm; 500 MHz-km at 1300 nm.

F. Minimum Effective Modal Bandwidth-length Product: 4700 MHz-km at 850 nm.

G. Jacket:

1. Jacket Color: Aqua.
2. Type: Dielectric Armored
3. Armor Material: Aluminum
4. Cable cordage jacket, fiber, unit, and group color shall be according to TIA-598-D.
5. Imprinted with fiber count, fiber type, and aggregate length at regular intervals not to exceed 40 inches.

H. Listed and labeled by an NRTL acceptable to authorities having jurisdiction as complying with UL 444, UL 1651, and NFPA 70 for the following types:

1. Plenum Rated, Nonconductive: Type OFNP, complying with NFPA 262; Type OFNP in listed plenum communications raceway; or Type OFN, Type OFNG, Type OFNP, or Type OFNR in metallic conduit.
2. Riser Rated, Nonconductive: Type OFNR, complying with UL 1666.

2.3 9/125 MICROMETER, SINGLE-MODE, INSIDE PLANT OPTICAL FIBER CABLE (OS2)

A. Description: Single mode, 9/125-micrometer, tight buffered, optical fiber cable. Number of strands as indicated on project drawings.

B. Manufacturers: Subject to compliance with requirements, provide products by one of the following:

1. Panduit Corp.
2. CommScope, Inc.
3. Corning Cable Systems.

C. Standards:

1. Comply with TIA-492CAAA for detailed specifications.
2. Comply with TIA-568-C.3 for performance specifications.
3. Comply with ICEA S-83-596 for mechanical properties.

D. Conductive cable shall be aluminum armored type.

E. Maximum Attenuation: 0.4 dB/km at 1310 nm; 0.3 dB/km at 1550 nm.

F. Jacket:

1. Jacket Color: Yellow.
2. Type: Dielectric Armored
3. Armor Material: Aluminum
4. Cable cordage jacket, fiber, unit, and group color shall be according to TIA-598-D.
5. Imprinted with fiber count, fiber type, and aggregate length at regular intervals not to exceed 40 inches.

G. Listed and labeled by an NRTL acceptable to authorities having jurisdiction as complying with UL 444, UL 1651, and NFPA 70 for the following types:

1. Plenum Rated, Nonconductive: Type OFNP, complying with NFPA 262; Type OFNP in listed plenum communications raceway; or Type OFN, Type OFNG, Type OFNP, or Type OFNR in metallic conduit.
2. Riser Rated, Nonconductive: Type OFNR, complying with UL 1666.

2.4 850 NANOMETER LASER-OPTIMIZED, 50/125 MICROMETER, MULTIMODE INDOOR/ OUTDOOR PLANT OPTICAL FIBER CABLE (OM4)

A. Description: Multimode, 50/125-micrometer, optical fiber cable. Cable shall be all-dielectric, stranded loose-tube design with dry water blocking for outdoor duct and aerial installations in fiber counts from two to 288 as indicated on the Project Drawings.

B. Manufacturers: Subject to compliance with requirements, provide products by one of the following:

1. Berk-Tek Leviton; a Nexans/Leviton alliance
2. CommScope, Inc.
3. Corning Cable Systems.

C. Standards:

1. Comply with TIA-492CAAA for detailed specifications.
2. Comply with TIA-568-C.3 for performance specifications.
3. Comply with ICEA S-83-596 for mechanical properties.

D. Maximum Attenuation: 0.4 dB/km at 1310 nm; 0.3 dB/km at 1550 nm.

E. Jacket:

1. Jacket Color: Black
2. Cable cordage jacket, fiber, unit, and group color shall be according to TIA-598-D.
3. Imprinted with fiber count, fiber type, and aggregate length at regular intervals not to exceed 40 inches.

2.5 9/125 MICROMETER SINGLE-MODE, INDOOR/OUTDOOR PLANT OPTICAL FIBER CABLE (OS2)

A. Description: Single mode, 9/125-micrometer, optical fiber cable. Cable shall be all-dielectric, stranded loose-tube design with dry water blocking for outdoor duct and aerial installations in fiber counts from two to 288 as indicated on the Project Drawings.

B. Manufacturers: Subject to compliance with requirements, provide products by one of the following:

1. Berk-Tek Leviton; a Nexans/Leviton alliance.
2. CommScope, Inc.
3. Corning Cable Systems.

C. Standards:

1. Comply with TIA-492CAAB for detailed specifications.
2. Comply with TIA-568-C.3 for performance specifications.
3. Comply with ICEA S-87-640 for mechanical properties.

D. Maximum Attenuation: 0.4 dB/km at 1310 nm; 0.3 dB/km at 1550 nm.

E. Jacket:

1. Jacket Color: Black.
2. Cable cordage jacket, fiber, unit, and group color shall be according to TIA-598-D.
3. Imprinted with fiber count, fiber type, and aggregate length at regular intervals not to exceed 40 inches.

2.6 OPTICAL FIBER CABLE HARDWARE

A. Manufacturers: Subject to compliance with requirements, available manufacturers offering products that may be incorporated into the Work include, but are not limited to, the following:

1. Commscope, Inc.
2. Corning Cable Systems.
3. Panduit Corporation.

B. Standards:

1. Comply with Fiber Optic Connector Intermateability Standard (FOCIS) specifications of the TIA-604 series.
2. Comply with TIA-568-C.3.

C. Fiber Optic Enclosure

1. Shall provide cross connect, interconnect, and splicing capabilities and contain troughs for supporting and routing of the fiber cables and jumpers.
2. Shall consist of a modular enclosure with retainer rings in the slack storage section to limit the bending radius of fibers.
3. Shall have a window section to insert connector panels for mounting of connectorized fibers.
4. Shall provide capacity to accommodate quantity of terminations as indicated on the project drawings, plus 25% spare capacity for future growth.
5. Refer to Project Drawings for Wall-Mount and Rack-Mount requirements.

D. Fiber Connector Panels

1. Modular, quick-fastening steel plate, powder-coated to match the fiber enclosure finish.
2. Shall have a pre-installed array of fiber adapters of a specific connector type, available in low- or high-density versions.
3. Pre-installed, push-pull type quick-release fasteners for quick snap-in installation.
4. Suitable for mounting either vertically or horizontally.
5. Panels with SC or LC adapters shall have precision phosphor-bronze alignment sleeves that are suitable for either singlemode or multimode transmission. SC/APC adapters shall have precision ceramic alignment sleeves.
6. All fiber panels shall have dust caps installed.

E. Fiber Optic Connectors

1. Connector Pigtails

a. Optical fiber pigtails shall be constructed with a fiber connector, factory terminated onto a cut length of 900 micron buffered fiber cable of specific color.
b. Connector pigtail terminations shall be heat-cured epoxy type with a machine polish, inspected 100% for polish quality and mated-pair insertion loss.
c. Epoxy volume within each connector shall be sufficient to properly surround and strain relieve the buffer layer at the buffer/fiber transition inside the connector body.
d. Pigtails shall be available in standard lengths of 3 meters.
e. Connector shall be LC-Style complying with TIA-604-10-B.
f. Factory terminated connectors shall comply with the applicable ANSI/TIA-604 Intermateability standard.

F. Splices and Closures

1. The fiber splice module shall be utilized for all outside plant terminations. The link shall consist of the fiber cable, the splice, the splice tray holder/closure, the fiber panel/coupler, a pre-manufactured fiber pigtail with pre-polished fiber connector, and a fiber jumper to connect the pigtail-coupled link to the appropriate electronic switch. The fiber splice module shall meet the following specifications:

a. Fusion: Optical fiber splices shall not exceed a maximum optical attenuation of 0.3 dB when measured in accordance with ANSI/TIA-455-34, Method A (factory testing) or ANSI/TIA-455-59 (field testing). Optical fiber splices shall have a minimum return loss of 20 dB for multimode, 26 dB for single mode, when measured in accordance with ANSI/TIA-455-107. The minimum single mode return loss for broadband analog video (CATV) applications is 55 dB.
b. All fusion splices shall be mounted in protective trays within the closure.
c. Joins single mode or multi-mode fibers.
d. Establishes a permanent fusion splice.
e. May be used in OSP and/or premises applications.
f. Accept 250 and 900 micron fibers.
g. Re-enterable, portable and reusable.
h. Require no polishing.
i. Require no adhesives.
j. No loose parts.
k. Unlimited shelf life.

G. Patch Cords: Factory-made, dual-fiber cables in lengths.

1. The fiber optic patch cord will be consistent with termination type and fiber optic mode. (i.e. singlemode or multimode).

2. Field terminated patch cords are not acceptable.
3. **Provide quantity of fiber patch cords equal to the quantity of fiber terminations plus 10% spare. Varying lengths of 3', 5', and 10' fiber patch cords shall be provided as needed. Coordinate patch cord lengths and quantities with the owner.**

2.7 GROUNDING

A. Comply with requirements in Section 270526 "Grounding and Bonding for Communications Systems" for grounding conductors and connectors.

B. Comply with TIA-607-C.

2.8 IDENTIFICATION PRODUCTS

A. Comply with TIA-606-B and UL 969 for a system of labeling materials, including label stocks, laminating adhesives, and inks used by label printers.

B. Comply with requirements in Section 270553 "Identification for Communications Systems."

2.9 SOURCE QUALITY CONTROL

A. Factory test multimode optical fiber cables according to TIA-526-14-B and TIA-568-C.3.

B. Factory test pre-terminated optical fiber cable assemblies according to TIA-526-14-B and TIA-568-C.3.

C. Cable will be considered defective if it does not pass tests and inspections.

D. Prepare test and inspection reports.

PART 3 - EXECUTION

3.1 ENTRANCE FACILITIES

A. Coordinate backbone cabling with the protectors and demarcation point provided by communications service provider.

3.2 WIRING METHODS

A. Wiring within Enclosures: Bundle, lace, and train cables within enclosures. Connect to terminal points with no excess and without exceeding manufacturer's limitations on bending radii. Provide and use lacing bars and distribution spools.

3.3 INSTALLATION OF OPTICAL FIBER BACKBONE CABLES

A. Comply with NECA 1, NECA 301, and NECA/BICSI 568.

B. General Requirements for Optical Fiber Cabling Installation:

1. Comply with TIA-568-C.1 and TIA-568-C.3.
2. Comply with BICSI ITSIMM, Ch. 6, "Cable Termination Practices."
3. Terminate all cables; no cable shall contain unterminated elements. Make terminations only at indicated outlets, terminals, cross-connects, and patch panels.
4. Ensure that the maximum pulling tensions of the specified distribution cables are not exceeded and cable bends maintain the proper radius during the placement of the facilities.
5. Install plenum rated cables where cables are not installed in conduits or enclosed wireways.
6. Install cables designed for the installation environment.

    a. For each cable distribution application, install fiber optic cables UL listed for the application.
    b. For cable distribution applications including enclosures or raceways underground or in slabs on grade, install fiber optic cables designed for use in wet locations.

7. Cables may not be spliced. Secure and support cables at intervals not exceeding 30 inches and not more than 6 inches from cabinets, boxes, fittings, outlets, racks, frames, and terminals.
8. Install lacing bars to restrain cables, to prevent straining connections, and to prevent bending cables to smaller radii than minimums recommended by manufacturer.
9. Bundle, lace, and train cable to terminal points without exceeding manufacturer's limitations on bending radii, but not less than radii specified in BICSI ITSIMM, "Cabling Termination Practices" Chapter. Use lacing bars and distribution spools.
10. Do not install bruised, kinked, scored, deformed, or abraded cable. Do not splice cable between termination, tap, or junction points. Remove and discard cable if damaged during installation and replace it with new cable.
11. Cold-Weather Installation: Bring cable to room temperature before dereeling. Heat lamps shall not be used for heating.
12. In the communications equipment room, provide a 10-foot-long service loop on each end of cable.
13. Pulling Cable: Comply with BICSI ITSIMM, Ch. 4, "Pulling Cable." Monitor cable pull tensions.
14. Cable may be terminated on connecting hardware that is rack or cabinet mounted.
15. Place fiber-optic cable so as to maintain the minimum cable bend radius limits specified by the manufacturer.
16. Place fiber-optic cables transitioning between the cable trays and cabinets or racks in a neat and orderly manner per NEC 318.11(b) requirements and pathway requirements of TIA 569-A. Velcro transitioning bundles.
17. Secure the cables in the Communication Rooms with cable ties or straps as needed to prevent cables from sagging or becoming disorderly.
18. Follow manufacturer’s installation instructions for connector installation.
19. Bring fiber optic cables into patch panels or cabinets at one location. Secure cables inside patch panels or cabinets at entrance points by securing fiber jackets. Break out individual fiber cables inside of panel or cabinet.
20. Fusion splices shall be located in attached splice trays.
21. Follow guidance of ANSI/TIA-568-C.3 regarding polarity management of fiber elements in the permanent link. Directly terminate fiber-optic on patch panels, in standard color code order.
22. Use connector manufacturer’s recommended tools.
23. Fiber-optic connecting hardware and material including patch panels, connectors, cross-connect cables, patch cords, and other components used to connect fiber-optic cable shall be sourced from the same manufacturer.
24. Non-Armored Fiber cables shall be installed in innerduct.

C. Open-Cable Installation:

1. Install cabling with horizontal and vertical cable guides in telecommunications spaces with terminating hardware and interconnection equipment.
2. Cable shall not be run through structural members or in contact with pipes, ducts, or other potentially damaging items.

D. Installation of Cable Routed Exposed under Raised Floors:

1. Install plenum-rated cable only.
2. Install cabling after the flooring system has been installed in raised floor areas.
3. Coil cable 6 feet long not less than 12 inches in diameter below each feed point.

E. Group connecting hardware for cables into separate logical fields.

3.4 FIRESTOPPING

A. Comply with requirements in Section 078413 "Penetration Firestopping."

B. Comply with TIA-569-D, Annex A, "Firestopping."

C. Comply with BICSI ITSIMM, "Firestopping" Chapter.

3.5 GROUNDING

A. Install grounding according to BICSI ITSIMM, "Grounding (Earthing), Bonding, and Electrical Protection" Chapter.

B. Comply with TIA-607-B and NECA/BICSI-607.

C. Locate grounding bus bar to minimize the length of bonding conductors. Fasten to wall allowing at least 2-inch clearance behind the grounding bus bar. Connect grounding bus bar with a minimum No. 4 AWG grounding electrode conductor from grounding bus bar to suitable electrical building ground.

D. Bond metallic equipment to the grounding bus bar, using not smaller than No. 6 AWG equipment grounding conductor.

3.6 IDENTIFICATION

A. Comply with requirements in Section 271523 "Communications Optical Fiber Horizontal Cabling" for cable and asset management software.

B. Cable Schedule: Install in a prominent location in each equipment room and wiring closet. List incoming and outgoing cables and their designations, origins, and destinations. Protect with rigid frame and clear plastic cover. Furnish an electronic copy of final comprehensive schedules for Project.

C. Cabling Administration Drawings: Show building floor plans with cabling administration-point labeling. Identify labeling convention and show labels for telecommunications closets, backbone pathways and cables, entrance pathways and cables, terminal hardware and positions, horizontal cables, work areas and workstation terminal positions, grounding buses and pathways, and equipment grounding conductors.

D. Cable and Wire Identification:

1. Label each cable within 4 inches of each termination and tap, where it is accessible in a cabinet or junction or outlet box, and elsewhere as indicated.
2. Each wire connected to building-mounted devices is not required to be numbered at device if color of wire is consistent with associated wire connected and numbered within panel or cabinet.
3. Exposed Cables and Cables in Cable Trays and Wire Troughs: Label each cable at intervals not exceeding 15 feet.
4. Label each unit and field within distribution racks and frames.

5. Identification within Connector Fields in Equipment Rooms and Wiring Closets: Label each connector and each discrete unit of cable-terminating and connecting hardware. Where similar jacks and plugs are used for both voice and data communication cabling, use a different color for jacks and plugs of each service.

E. Labels shall be preprinted or computer-printed type with printing area and font color that contrasts with cable jacket color but still complies with requirements in TIA 606-B, for the following:

1. Flexible vinyl or polyester that flexes as cables are bent.

3.7 FIELD QUALITY CONTROL

A. Perform tests and inspections.

B. Tests and Inspections:

1. Visually inspect optical fiber jacket materials for NRTL certification markings. Inspect cabling terminations in communications equipment rooms for compliance with color-coding for pin assignments and inspect cabling connections for compliance with TIA-568-C.1.
2. Visually inspect cable placement, cable termination, grounding and bonding, equipment and patch cords, and labeling of all components.
3. Optical Fiber Cable Tests:

a. Test instruments shall meet or exceed applicable requirements in TIA-568-C.1. Use only test cords and adapters that are qualified by test equipment manufacturer for channel or link test configuration.
b. Test equipment shall be of the quality and accuracy required to test and/or measure system performance with the tolerances specified and shall have been calibrated by the manufacturer within the last 12 months, or as specified herein. Equipment shall be calibrated according to the manufacturer's recommended intervals and when dropped or damaged. Calibration tags shall be affixed or certificates available on request.
c. Test equipment and modules shall be within the calibration period recommended by the manufacturer of the test equipment in order to achieve the manufacturer-specified measurement accuracy and shall be within 1 year of the test date.
d. Link End-to-End Attenuation Tests:

1) Horizontal and multimode backbone link measurements: Test at 850 or 1300 nm in one direction according to TIA-526-14-B, Method B, One Reference Jumper.
2) Single-mode backbone links shall be tested bidirectionally at both 1310 nm and 1550 nm in accordance with TIA 526-7A-2015, Method A.1, One Reference Jumper. Single-mode links shall be certified with test tools using laser light sources at 1310 nm and 1550 nm.
3) Attenuation test results for backbone links shall be less than 2.0 dB. Attenuation test results shall be less than those calculated according to equation in TIA-568-C.1.

e. Cable test results with negative loss values shall be deemed invalid. Fiber terminations shall be cleaned, evaluated, and retested until the results contain no negative loss values at no additional cost to the Owner. Verify that the cable test results are valid.

4. Optical Time Domain Reflectometer (OTDR) Tests:

a. Perform OTDR testing on outside-plant fiber.
b. OTDR testing shall meet the following requirements for both single-mode and multimode fiber cabling:

1) Reflective events (connections) shall not exceed 0.5 dB.
2) Non-reflective events (splices) shall not exceed 0.15 dB.
3) Fiber links shall be tested at the appropriate operating wavelengths for anomalies and to ensure uniformity of cable attenuation and connector insertion loss.
4) Each fiber link and channel shall be tested in both directions.

    a) Multimode: 850 nm and 1300 nm.
    b) Single-mode: 1310 nm and 1550 nm.

5) A launch cable shall be installed between the OTDR and the first link connection.
6) A receive cable shall be installed after the last link connection.
7) The length of each fiber shall be recorded.

C. Data for each measurement shall be documented.

1. The test results/measurements shall be submitted in both the test equipment manufacturer's raw data file and searchable PDF format files.
2. The database for the complete project shall be stored and delivered in digital format prior to Owner acceptance of the building. This digital format shall include the software tools required to view, inspect, and print any selection of the test reports.

D. Remove and replace cabling where test results indicate that it does not comply with specified requirements.

E. End-to-end cabling will be considered defective if it does not pass tests and inspections.

F. A representative of the Owner may elect to test 5% of the installed cables. The test results will be compared with the submitted results. In the event that more than 2% of the compared results differ from the submitted results, the Owner may contract with a third-party testing firm to retest 100% of the installation and the cost shall be borne by the Contractor.

G. Prepare test and inspection reports.

END OF SECTION 271323

SECTION 271513 - COMMUNICATIONS COPPER HORIZONTAL CABLING

PART 1 - GENERAL

1.1 RELATED DOCUMENTS

A. Drawings and general provisions of the Contract, including General and Supplementary Conditions and Division 01 Specification Sections, apply to this Section.

1.2 SUMMARY

A. Section Includes:

1. Category-6A twisted pair cable.
2. Twisted pair cable hardware, including plugs and jacks.
3. Cabling identification products.
4. Source quality control requirements for twisted pair cable.

1.3 DEFINITIONS

A. Cross-Connect: A facility enabling the termination of cable elements and their interconnection or cross-connection.

B. EMI: Electromagnetic interference.

C. FTP: Shielded twisted pair.

D. F/FTP: Overall foil screened cable with foil screened twisted pair.

E. F/UTP: Overall foil screened cable with unscreened twisted pair.

F. IDC: Insulation displacement connector.

G. LAN: Local area network.

H. Jack: Also commonly called an "outlet," it is the fixed, female connector.

I. Plug: Also commonly called a "connector," it is the removable, male telecommunications connector.

J. RCDD: Registered Communications Distribution Designer.

K. Screen: A metallic layer, either a foil or braid, placed around a pair or group of conductors.

L. Shield: A metallic layer, either a foil or braid, placed around a pair or group of conductors.

M. S/FTP: Overall braid screened cable with foil screened twisted pair.

N. S/UTP: Overall braid screened cable with unscreened twisted pairs.

O. UTP: Unscreened (unshielded) twisted pair.

1.4 COPPER HORIZONTAL CABLING DESCRIPTION

A. Horizontal cable cabling system shall provide interconnections between Distributor A, Distributor B, or Distributor C, and the equipment outlet, otherwise known as "Cabling Subsystem 1," in the telecommunications cabling system structure. Cabling system consists of horizontal cables, intermediate and main cross-connects, mechanical terminations, and patch cords or jumpers used for horizontal-to-horizontal cross-connection.

1. TIA-568-C.1 requires that a minimum of two equipment outlets be installed for each work area.
2. Horizontal cabling shall contain no more than one transition point or consolidation point between the horizontal cross-connect and the telecommunications equipment outlet.
3. Bridged taps and splices shall not be installed in the horizontal cabling.

B. A work area is approximately 100 sq. ft., and includes the components that extend from the equipment outlets to the station equipment.

C. The maximum allowable horizontal cable length is 295 feet. This maximum allowable length does not include an allowance for the length of 16 feet to the workstation equipment or in the horizontal cross-connect.

1.5 ACTION SUBMITTALS

A. Product Data: For each type of product.

B. Shop Drawings: Reviewed and stamped by RCDD.

1. System Labeling Schedules: Electronic copy of labeling schedules, in software and format selected by Owner.
2. System Labeling Schedules: Electronic copy of labeling schedules that are part of the cabling and asset identification system of the software.
3. Cabling administration Drawings and printouts.
4. Wiring diagrams and installation details of telecommunications equipment, to show location and layout of telecommunications equipment, including the following:

a. Telecommunications rooms plans and elevations.
b. Telecommunications pathways.
c. Telecommunications system access points.
d. Telecommunications grounding system.
e. Telecommunications conductor drop locations.
f. Typical telecommunications details.
g. Mechanical, electrical, and plumbing systems.

C. Twisted pair cable testing plan.

D. Samples: For telecommunications jacks and plugs, in specified finish, one for each type and configuration and faceplates for color selection and evaluation of technical features.

1.6 INFORMATIONAL SUBMITTALS

A. Qualification Data: For RCDD, Installer, installation supervisor, and field inspector.

B. Product Certificates: For each type of product.

C. Source quality-control reports.

D. Field quality-control reports.

1.7 CLOSEOUT SUBMITTALS

A. Maintenance Data: For splices and connectors to include in maintenance manuals.

B. Contractor to submit all cable test results and any test documentation required prior to acceptance by the Owner.

C. Subsequent to the installation, and prior to acceptance of the work, the contractor shall prepare and issue record (as-built) drawings, in Adobe PDF and AutoCAD or BIM format, that reflect the lengths of cables installed, the actual manner and conditions of installation, including all deletions from, additions to or departures from the contract documents. These documents are to include the information outlet station numbers and cable routing where it varies from the original plan.

D. Provide cable termination schedules for all cables installed under the Work. Schedules shall be in printed form and on CD in Microsoft Excel format.

E. Provide Operation and Maintenance Manuals including wiring diagrams, parts list, shop drawings and manufacturers' information on all equipment and cables provided under this Work. Provide manuals within fifteen days of systems acceptance.

F. Upon completion of the work, the contractor shall coordinate with the manufacturer the issuance of a full warranty on the entire copper and fiber optic cable plant including the horizontal cabling for both parts and labor. The cabling contractor at his sole expense will correct any deficiencies determined by the manufacturer.

1.8 MAINTENANCE MATERIAL SUBMITTALS

A. Furnish extra materials that match products installed and that are packaged with protective covering for storage and identified with labels describing contents.

1. Faceplates: One of each type.
2. Jacks: Ten of each type.
3. Multiuser Telecommunications Outlet Assemblies: One of each type.
4. Patch-Panel Units: One of each type.
5. Plugs: Ten of each type.

1.9 QUALITY ASSURANCE

A. Installer Qualifications: Cabling Installer must have personnel certified by BICSI on staff.

1. Layout Responsibility: Preparation of Shop Drawings, cabling administration Drawings, and field testing program development by an RCDD.
2. Installation Supervision: Installation shall be under the direct supervision of Technician, who shall be present at all times when Work of this Section is performed at Project site.
3. Testing Supervisor: Currently certified by BICSI as an RCDD to supervise on-site testing.

1.10 DELIVERY, STORAGE, AND HANDLING

A. Test cables upon receipt at Project site.

1. Test each pair of twisted pair cable for open and short circuits.

1.11 PROJECT CONDITIONS

A. Environmental Limitations: Do not deliver or install cables and connecting materials until wet work in spaces is complete and dry, and temporary HVAC system is operating and maintaining ambient temperature and humidity conditions at occupancy levels during the remainder of the construction period.

1.12 COORDINATION

A. Coordinate layout and installation of telecommunications pathways and cabling with Owner's telecommunications and LAN equipment and service suppliers.

PART 2 - PRODUCTS

2.1 PERFORMANCE REQUIREMENTS

A. General Performance: Horizontal cabling system shall comply with transmission standards in TIA-568-C.1, when tested according to test procedures of this standard.

B. Telecommunications Pathways and Spaces: Comply with TIA-569-E.

C. Grounding: Comply with TIA-607-C.

2.2 GENERAL CABLE CHARACTERISTICS

A. Listed and labeled by an NRTL acceptable to authorities having jurisdiction as complying with the applicable standard and NFPA 70 for the following types:

1. Communications, Plenum Rated: Type CMP complying with UL 1685 or Type CMP in listed plenum communications raceway.
2. Communications, Non-plenum: Type CMR complying with UL 1666.

B. Surface-Burning Characteristics: Comply with ASTM E 84; testing by a qualified testing agency. Identify products with appropriate markings of applicable testing agency.

1. Flame-Spread Index: 25 or less.
2. Smoke-Developed Index: 50 or less.

C. RoHS compliant.

D. Cable Construction

1. Listed CMR cable: Solid copper conductors with high-density polyolefin insulation and an overall low smoke polyvinyl chloride (PVC) jacket to achieve a riser (i.e., non-plenum) rating by applicable NEC requirements.

2. Listed CMP cable: Solid copper conductors with fluorinated ethylene propylene (FEP)/polyolefin insulation and an overall low smoke PVC jacket to achieve plenum rating by applicable NEC requirements.
3. Indoor/Outdoor CMP cable: Rated for wet locations with solid copper conductors covered in fluorinated ethylene propylene (FEP)/polyolefin insulation and an overall low smoke PVC jacket to achieve plenum rating by applicable NEC requirements.
4. OSP outdoor cable rated for wet locations: Solid copper conductors with polyolefin insulation, polyolefin fluted center member with flooding compound, and black polyethylene jacket.

E. Minimum compliant cables are not acceptable.

F. Copper Clad Aluminum cables are not acceptable.

2.3 CATEGORY 6A TWISTED PAIR CABLE

A. Description: Four-pair, balanced-twisted pair cable, with internal spline, certified to meet transmission characteristics of Category 6A cable at frequencies up to 500MHz.

B. Manufacturers: Subject to compliance with requirements, provide products by one of the following:

1. CommScope, Inc.
2. General Cable; Prysmian Group North America.
3. Panduit Corp.
4. Leviton / Berk-Tek

C. Standard: Comply with TIA-568-C.2 for Category 6A cables.

D. Conductors: 100-ohm, 23 AWG solid copper.

E. Shielding/Screening: Unshielded twisted pairs (UTP).

F. Cable Rating: Plenum.

G. Jacket: color as indicated on project drawings and is compliance with NC DIT Standards; thermoplastic.

2.4 TWISTED PAIR CABLE HARDWARE

A. Description: Hardware designed to connect, splice, and terminate twisted pair copper communications cable.

B. Manufacturers: Subject to compliance with requirements, provide products by one of the following:

1. CommScope, Inc.
2. General Cable; Prysmian Group North America.
3. Panduit Corp.

C. General Requirements for Twisted Pair Cable Hardware:

1. Comply with the performance requirements of Category 6A.
2. Comply with TIA-568-C.2, IDC type, with modules designed for punch-down caps or tools.
3. Cables shall be terminated with connecting hardware of same category or higher.

D. Source Limitations: Obtain twisted pair cable hardware from single source from single manufacturer.

E. Patch Panel: Modular panels housing numbered jack units with modular type fittings at each jack location for permanent termination of pair groups of installed cables. Patch panels shall be rated to meet channel warranty requirements.

1. Features:

a. Style: Angled
b. Modular Type panels.
c. Universal T568A and T568B wiring labels.
d. Labeling areas adjacent to conductors.
e. Replaceable connectors.
f. 24 or 48 ports as indicated on the project drawings.
g. Rear strain-relief bar.

2. Construction: 16-gauge steel and mountable on 19-inch equipment racks.

F. Patch Cords: Factory-made, four-pair cables terminated with an eight-position modular plug at each end.

1. Patch cords shall have color-coded boots for circuit identification.
2. Modular data patch cords shall meet channel performance requirements specified herein, and shall be #24 AWG, stranded conductors insulated with solid polyolefin, tightly twisted into individual pairs and jacketed with flame retardant PVC.
3. Patch cords shall have latch guards to protect against snagging.
4. Field terminated patch cords are not acceptable.
5. Patch cords shall be provided as part of the warranted channel solution.
6. **Provide quantity of patch cords equal to the quantity of data drops plus 10% spare. Varying lengths of 3', 5', and 10' patch cords shall be provided as needed. Coordinate patch cord jacket color with the owner.**

G. Plugs and Plug Assemblies:

1. Male; eight position; color-coded modular telecommunications connector designed for termination of a single four-pair, 100-ohm, unshielded or shielded twisted pair cable.
2. Standard: Comply with TIA-568-C.2.
3. Marked to indicate transmission performance.

H. Modular Plug Termination Link (Direct Connect)

1. Standard: Conform to TIA-568.2-D, Annex F
2. Uses: Termination at end device including Wireless Access Points, CCTV Cameras, TV Displays, Projectors, and other devices as indicated on the project drawings.
3. Do not use unless specifically indicated to do so on the Project Drawings.

I. Jacks and Jack Assemblies:

1. Female; eight position; modular; fixed telecommunications connector designed for termination of a single four-pair, 100-ohm, unshielded or shielded twisted pair cable.
2. Designed to snap-in to a patch panel or faceplate.
3. Standard: Comply with TIA-568-C.2.
4. Marked to indicate transmission performance.
5. Refer to project drawings for locations of Cat-6A Jacks.
6. Provide keystone-style jacks as required in floor boxes, poke-thru's, modular furniture adapter plates, and other locations as required.

J. Faceplate:

1. Faceplates as indicated on the project drawings, vertical single gang faceplates designed to mount to single gang wall boxes.
2. Plastic Faceplate: High-impact plastic. Coordinate color with Section 262726 "Wiring Devices" and with Architect.
3. Faceplates shall be designed with flush port openings to accept jacks and other outlets indicated on the Drawings.
4. For use with snap-in jacks accommodating any combination of twisted pair, optical fiber, and coaxial work area cords.
5. Faceplates shall not extend more than 0.25" from the face of the wall.
6. Faceplates shall have an integrated label holder with clear plastic cover. Single gang faceplates shall have 2 integrated label holders with clear plastic covers; one shall be above the jacks and one shall be below the jacks. Double gang faceplates shall have 4 integrated label holders with clear plastic covers; two shall be above the jacks and two shall be below the jacks.

K. Modular Furniture Adapter Faceplates

1. Faceplates shall be designed for use within modular furniture.
2. Faceplates shall have an integrated label holder with clear plastic cover.
3. Confirm dimension of furniture knockout with proposed modular furniture adapter to ensure compatibility.
4. Color: black for dark furniture; ivory for light colored furniture.

L. Floor Box / Poke-Thru Adapter Plates

1. Coordinate with requirements of Division 26 as applicable.
2. Adapter Plates shall accept data jacks, A/V connectors, and other required connectivity devices as indicated on the drawings.

M. Surface Mount Boxes

1. 1-Port and 2-Port surface mount boxes as indicated on the project drawings.
2. Plenum rated as required.
3. Shall accept jacks from the same manufacturer as other components used throughout the project.

N. Legend:

1. Machine printed, in the field, using adhesive-tape label.
2. Snap-in, clear-label covers and machine-printed paper inserts.

2.5 IDENTIFICATION PRODUCTS

A. Comply with TIA-606-B and UL 969 for a system of labeling materials, including label stocks, laminating adhesives, and inks used by label printers.

2.6 SOURCE QUALITY CONTROL

A. Factory test cables on reels according to TIA-568-C.1.

B. Factory test twisted pair cables according to TIA-568-C.2.

C. Cable will be considered defective if it does not pass tests and inspections.

D. Prepare test and inspection reports.

PART 3 - EXECUTION

3.1 WIRING METHODS

A. Wiring Method: Install cables in raceways and cable trays, except within consoles, cabinets, desks, and counters. Conceal raceway and cables, except in unfinished spaces.

1. Install plenum cable in environmental air spaces, including plenum ceilings.
2. Comply with requirements for raceways and boxes specified in Section 270528 "Pathways for Communications Systems."

B. Wiring within Enclosures: Bundle, lace, and train cables within enclosures. Connect to terminal points with no excess and without exceeding manufacturer's limitations on bending radii. Provide and use lacing bars and distribution spools. Install conductors parallel with or at right angles to sides and back of enclosure.

3.2 INSTALLATION OF PATHWAYS

A. Comply with requirements for demarcation point, cabinets, and racks specified in Section 271100 "Communications Equipment Room Fittings."

B. Comply with Section 270528 "Pathways for Communications Systems."

C. Comply with Section 270529 "Hangers and Supports for Communications Systems."

D. Comply with Section 270536 "Cable Trays for Communications Systems."

E. Drawings indicate general arrangement of pathways and fittings.

3.3 INSTALLATION OF TWISTED-PAIR HORIZONTAL CABLES

A. Comply with NECA 1 and NECA/BICSI 568.

B. Jacks shall be wired per the pair assignments indicated in the ANSI/TIA-568.1D-2015 designation T568B wiring plan.

C. General Requirements for Cabling:

1. Comply with TIA-568-C.0, TIA-568-C.1, and TIA-568-C.2.
2. Comply with BICSI's "Information Transport Systems Installation Methods Manual (ITSIMM), Ch. 5, "Copper Structured Cabling Systems," "Cable Termination Practices" Section.
3. Horizontal cables shall be installed in a star topology from each communications outlet to the Telecommunications room serving that area.
4. The length of each horizontal cable from the Telecommunications room to the communications outlet shall not exceed 295'. Coordinate with the conduit and cable tray installation and modify as necessary to ensure distance requirements are not exceeded.
5. Install 110-style IDC termination hardware unless otherwise indicated.
6. Do not untwist twisted pair cables more than 1/2 inch from the point of termination to maintain cable geometry.
7. Terminate all conductors; no cable shall contain unterminated elements. Make terminations only at indicated outlets, terminals, cross-connects, and patch panels.
8. MUTOA shall not be used as a cross-connect point.

9. Consolidation points may be used only for making a direct connection to equipment outlets:

    a. Do not use consolidation point as a cross-connect point, as a patch connection, or for direct connection to workstation equipment.
    b. Locate consolidation points for twisted-pair cables at least 49 feet from communications equipment room.

10. Cables may not be spliced. Secure and support cables at intervals not exceeding 30 inches and not more than 6 inches from cabinets, boxes, fittings, outlets, racks, frames, and terminals.
11. Install lacing bars to restrain cables, prevent straining connections, and prevent bending cables to smaller radii than minimums recommended by manufacturer.
12. Bundle, lace, and train conductors to terminal points without exceeding manufacturer's limitations on bending radii, but not less than radii specified in BICSI Information Transport Systems Installation Methods Manual, Ch. 5, "Copper Structured Cabling Systems," "Cable Termination Practices" Section. Use lacing bars and distribution spools.
13. Do not install bruised, kinked, scored, deformed, or abraded cable. Do not splice cable between termination, tap, or junction points. Remove and discard cable if damaged during installation, and replace it with new cable.
14. Cold-Weather Installation: Bring cable to room temperature before dereeling. Heat lamps shall not be used for heating.
15. In the communications equipment room, install a 10-foot- long service loop on each end of cable.
16. Pulling Cable: Comply with BICSI Information Transport Systems Installation Methods Manual, Ch. 5, "Copper Structured Cabling Systems," "Pulling and Installing Cable" Section. Monitor cable pull tensions.
17. Observe the bending radius and pulling strength requirements of the cables during handling and installation.
18. Provide clutch or shear pin protection for cables during cable pulling to ensure cable pulling tension is not exceeded.
19. Conceal horizontal cables within ceilings and walls.
20. Cables, when not installed in conduit or cable tray, shall be bundled in groups of no more than 50 cables for Category 5e and 6, and no more than 24 cables for Category -6A. Cable bundle quantities exceeding these limits may cause deformation of the bottom cables within the bundle and degrade cable performance. Cable raceways shall not be filled greater than the ANSI TIA-569-A maximum fill for the particular raceway type or 40%.
21. Cable shall be installed above fire-sprinkler systems and shall not be attached to the system or any ancillary equipment or hardware. The cable system and support hardware shall be installed so that it does not obscure any valves, fire alarm conduit, boxes, or other control devices.
22. Provide temporary protection of cables before termination. Cables shall not be left lying on the floor. Bundle and use Velcro or hook and loop tape to provide protection.
23. Provide a 5'-7' service loop at the entrance of conduits that terminate at communications outlets.

D. Open-Cable Installation:

1. Complete work above ceiling prior to ceiling tile installation.
2. Install cabling with horizontal and vertical cable guides in telecommunications spaces with terminating hardware and interconnection equipment.
3. Suspend twisted pair cabling, not in a wireway or pathway, a minimum of 8 inches above ceilings by cable supports not more than 60 inches apart.
4. Cabling routed above ceilings shall be supported using the following methods:

    a. In cable tray above accessible ceiling where indicated on the Drawings.
    b. In conduit where indicated on the Drawings. A pull cord (nylon; 1/8" minimum) shall be co-installed with all cable installed in any conduit.
    c. On J-hooks and/or Cable Straps, unless otherwise indicated on the Drawings. Cables shall be supported at a maximum of 48 to 60 inch intervals. At no point shall cable(s) rest on acoustic ceiling grids or panels.

d. Cables shall not be attached to ceiling grid or lighting fixture wires.

5. Cable shall not be run through structural members or in contact with pipes, ducts, or other potentially damaging items.

E. Installation of Cable Routed Exposed under Raised Floors:

1. Install plenum-rated cable only.
2. Install cabling after the flooring system has been installed in raised floor areas.
3. Coil cable 6 feet long not less than 12 inches in diameter below each feed point.
4. Provide detailed cable run diagrams for cable runs within raised floors detailing exact locations of cables.

F. Installation of Communications Outlets

1. Communications outlets shall be formed from an assembly of faceplates and jacks as indicated on the Drawings.
2. Communications outlets installed in walls shall be installed in a double-gang box, with a single-gang plaster ring, terminating cables from the Telecommunications room.
3. Install outlets straight and perpendicular to walls and ceilings.
4. Secure faceplates with screws.
5. Label appropriately and cover each label with the clear plastic cover provided with the faceplate.

G. Group connecting hardware for cables into separate logical fields.

H. Separation from EMI Sources:

1. Comply with recommendations from BICSI's "Telecommunications Distribution Methods Manual" and TIA-569-D for separating unshielded copper communication cable from potential EMI sources, including electrical power lines and equipment.
2. Separation between open communications cables or cables in nonmetallic raceways and unshielded power conductors and electrical equipment shall be as follows:

   a. Electrical Equipment Rating Less Than 2 kVA: A minimum of 5 inches.
   b. Electrical Equipment Rating between 2 and 5 kVA: A minimum of 12 inches.
   c. Electrical Equipment Rating More Than 5 kVA: A minimum of 24 inches.
3. Separation between communications cables in grounded metallic raceways and unshielded power lines or electrical equipment shall be as follows:

   a. Electrical Equipment Rating Less Than 2 kVA: A minimum of 2-1/2 inches.
   b. Electrical Equipment Rating between 2 and 5 kVA: A minimum of 6 inches.
   c. Electrical Equipment Rating More Than 5 kVA: A minimum of 12 inches.
4. Separation between communications cables in grounded metallic raceways, power lines, and electrical equipment located in grounded metallic conduits or enclosures shall be as follows:

   a. Electrical Equipment Rating Less Than 2 kVA: No requirement.
   b. Electrical Equipment Rating between 2 and 5 kVA: A minimum of 3 inches.
   c. Electrical Equipment Rating More Than 5 kVA: A minimum of 6 inches.

5. Separation between Communications Cables and Electrical Motors and Transformers, 5 kVA or HP and Larger: A minimum of 48 inches.
6. Separation between Communications Cables and Fluorescent Fixtures: A minimum of 5 inches.

3.4 FIRESTOPPING

A. Comply with requirements in Section 078413 "Penetration Firestopping."

B. Comply with TIA-569-D, Annex A, "Firestopping."

C. Comply with "Firestopping Systems" Article in BISCI's "Telecommunications Distribution Methods Manual."

3.5 GROUNDING

A. Install grounding according to the "Grounding, Bonding, and Electrical Protection" chapter in BICSI's "Telecommunications Distribution Methods Manual."

B. Comply with TIA-607-B and NECA/BICSI-607.

C. Locate grounding bus bar to minimize the length of bonding conductors. Fasten to wall, allowing at least a 2-inch clearance behind the grounding bus bar. Connect grounding bus bar to suitable electrical building ground, using a minimum No. 4 AWG grounding electrode conductor.

D. Bond metallic equipment to the grounding bus bar, using not smaller than a No. 6 AWG equipment grounding conductor.

3.6 IDENTIFICATION

A. Cable Schedule: Install in a prominent location in each equipment room and wiring closet. List incoming and outgoing cables and their designations, origins, and destinations. Protect with rigid frame and clear plastic cover. Furnish an electronic copy of final comprehensive schedules for Project.

B. Cabling Administration Drawings: Show building floor plans with cabling administration-point labeling. Identify labeling convention and show labels for telecommunications closets, terminal hardware and positions, horizontal cables, work areas and workstation terminal positions, grounding buses and pathways, and equipment grounding conductors.

C. Cable and Wire Identification:

1. Label each cable within 4 inches of each termination and tap, where it is accessible in a cabinet or junction or outlet box, and elsewhere as indicated.
2. Each wire connected to building-mounted devices is not required to be numbered at the device if wire color is consistent with associated wire connected and numbered within panel or cabinet.
3. Cables labeled within the bundle, where the label is obscured from view shall not be acceptable.
4. Exposed Cables and Cables in Cable Trays and Wire Troughs: Label each cable at intervals not exceeding 15 feet.
5. Label each terminal strip, and screw terminal in each cabinet, rack, or panel.

    a. Individually number wiring conductors connected to terminal strips, and identify each cable or wiring group, extended from a panel or cabinet to a building-mounted device, with the name and number of a particular device.
    b. Label each unit and field within distribution racks and frames.

6. Identification within Connector Fields in Equipment Rooms and Wiring Closets: Label each connector and each discrete unit of cable-terminating and -connecting hardware. Where similar

jacks and plugs are used for both voice and data communication cabling, use a different color for jacks and plugs of each service.

D. Labels shall be preprinted or computer-printed type, with a printing area and font color that contrast with cable jacket color but still comply with TIA-606-B requirements for the following:

1. Cables use flexible vinyl or polyester that flexes as cables are bent.

3.7 FIELD QUALITY CONTROL

A. Perform tests and inspections.

B. Tests and Inspections:

1. Visually inspect jacket materials for NRTL certification markings. Inspect cabling terminations in communications equipment rooms for compliance with color-coding for pin assignments, and inspect cabling connections for compliance with TIA-568-C.1.
2. Visually inspect cable placement, cable termination, grounding and bonding, equipment and patch cords, and labeling of all components.
3. Test twisted pair cabling for DC loop resistance, shorts, opens, intermittent faults, and polarity between conductors. Test operation of shorting bars in connection blocks. Test cables after termination but not cross-connection.

a. Test instruments shall meet or exceed applicable requirements in TIA-568-C.2. Perform tests with a tester that complies with performance requirements in "Test Instruments (Normative)" Annex, complying with measurement accuracy specified in "Measurement Accuracy (Informative)" Annex. Use only test cords and adapters that are qualified by test equipment manufacturer for channel or link test configuration.
b. Test equipment shall be of the quality and accuracy required to test and/or measure system performance with the tolerances specified and shall have been calibrated by the manufacturer within the last 12 months, or as specified herein. Equipment shall be calibrated according to the manufacturer's recommended intervals and when dropped or damaged. Calibration tags shall be affixed or certificates available on request.

C. Data for each measurement shall be documented.

1. The test results/measurements shall be submitted in both the test equipment manufacturer’s raw data file and searchable PDF format files.
2. The database for the complete project, including twisted-pair copper cabling links, if applicable, shall be stored and delivered in digital format prior to Owner acceptance of the building. This digital format shall include the software tools required to view, inspect, and print any selection of the test reports.

D. Remove and replace cabling where test results indicate that they do not comply with specified requirements.

1. Any cable damaged or exceeding recommended installation parameters during installation shall be replaced by the contractor prior to final acceptance at no cost to the Owner.

E. End-to-end cabling will be considered defective if it does not pass tests and inspections.

F. A representative of the Owner may elect to test 5% of the installed cables. The test results will be compared with the submitted results. In the event that more than 2% of the compared results differ from the submitted results, the Owner may contract with a third-party testing firm to retest 100% of the installation and the cost shall be borne by the Contractor.

G. Prepare test and inspection reports. Contractor shall furnish test reports in both PDF and source data files.

END OF SECTION 271513

SECTION 284621.11 - ADDRESSABLE FIRE-ALARM SYSTEMS

PART 1 - GENERAL

1.1 RELATED DOCUMENTS

A. Drawings and general provisions of the Contract, including General and Supplementary Conditions and Division 01 Specification Sections, apply to this Section.

1.2 SUMMARY

A. Section Includes:

1. Addressable fire-alarm system.
2. Fire-alarm control unit (FACU).
3. Manual fire-alarm boxes.
4. System smoke detectors.
5. Duct smoke detectors.
6. Carbon monoxide detectors.
7. Heat detectors.
8. Fire-alarm notification appliances.
9. Emergency responder radio coverage system.
10. Fire-alarm remote annunciators.
11. Fire-alarm addressable interface devices.
12. Digital alarm communicator transmitters (DACTs).
13. Video smoke detection.

B. Related Requirements:

1. Section 087100 "Door Hardware" for magnetic door holders that release in response to fire-alarm outputs.
2. Section 260519 "Low-Voltage Electrical Power Conductors and Cables" or Section 260523 "Control Voltage Electrical Power Cables" for cables and conductors for fire-alarm systems.

1.3 DEFINITIONS

A. DACT: Digital alarm communicator transmitter.

B. EMT: Electrical metallic tubing.

C. FACU: Fire-alarm control unit.

D. High-Performance Building: A building that integrates and optimizes on a life-cycle basis all major high-performance attributes, including energy conservation, environment, safety, security, durability, accessibility, cost-benefit, productivity, sustainability, functionality, and operational considerations.

E. Mode: The terms "Active Mode," "Off Mode," and "Standby Mode" are used as defined in the 2007 Energy Independence and Security Act (EISA).

F. NICET: National Institute for Certification in Engineering Technologies.

G. PC: Personal computer.

H. Voltage Class: For specified circuits and equipment, voltage classes are defined as follows:

1. Control Voltage: Listed and labeled for use in remote-control, signaling, and power-limited circuits supplied by a Class 2 or Class 3 power supply having rated output not greater than 150 V and 5 A, allowing use of alternate wiring methods complying with NFPA 70, Article 725.
2. Low Voltage: Listed and labeled for use in circuits supplied by a Class 1 or other power supply having rated output not greater than 1000 V, requiring use of wiring methods complying with NFPA 70, Article 300, Part I.

1.4 ACTION SUBMITTALS

A. Product Data: For each type of product, including furnished options and accessories.

1. Include construction details, material descriptions, dimensions, profiles, and finishes.
2. Include rated capacities, operating characteristics, and electrical characteristics.

B. Shop Drawings: For fire-alarm system.

1. Comply with recommendations and requirements in "Documentation" section of "Fundamentals" chapter in NFPA 72.
2. Include plans, elevations, sections, and details, including details of attachments to other Work.
3. Include details of equipment assemblies. Indicate dimensions, weights, loads, required clearances, method of field assembly, components, and locations. Indicate conductor sizes, indicate termination locations and requirements, and distinguish between factory and field wiring.
4. Annunciator panel details as required by authorities having jurisdiction.
5. Detail assembly and support requirements.
6. Include voltage drop calculations for notification-appliance circuits.
7. Include battery-size calculations.
8. Include input/output matrix.
9. Include written statement from manufacturer that equipment and components have been tested as a system and comply with requirements in this Section and in NFPA 72.
10. Include performance parameters and installation details for each detector.
11. Verify that each duct detector is listed for complete range of air velocity, temperature, and humidity possible when air-handling system is operating.
12. Provide control wiring diagrams for fire-alarm interface to HVAC; coordinate location of duct smoke detectors and access to them.

    a. Show critical dimensions that relate to placement and support of sampling tubes, detector housing, and remote status and alarm indicators.
    b. Show field wiring and equipment required for HVAC unit shutdown on alarm.
    c. Locate detectors in accordance with manufacturer's written instructions.

13. Include voice/alarm signaling-service equipment rack or console layout, grounding schematic, amplifier power calculation, and single-line connection diagram.

14. Include floor plans to indicate final outlet locations showing address of each addressable device. Show size and route of cable and conduits and point-to-point wiring diagrams.

1.5 INFORMATIONAL SUBMITTALS

A. Field quality-control reports.

B. Qualification Statements: For Installer.

C. Sample Warranty: Submittal must include line item pricing for replacement parts and labor.

1.6 CLOSEOUT SUBMITTALS

A. Operation and Maintenance Data: For fire-alarm systems and components to include in emergency, operation, and maintenance manuals.

1. In addition to items specified in Section 017823 "Operation and Maintenance Data," include the following:

   a. Comply with "Records" section of "Inspection, Testing and Maintenance" chapter in NFPA 72.
   b. Provide "Fire-Alarm and Emergency Communications System Record of Completion Documents" in accordance with "Completion Documents" Article in "Documentation" section of "Fundamentals" chapter in NFPA 72.
   c. Complete wiring diagrams showing connections between devices and equipment. Each conductor must be numbered at every junction point with indication of origination and termination points.
   d. Riser diagram.
   e. Device addresses.
   f. Record copy of site-specific software.
   g. Provide "Inspection and Testing Form" in accordance with "Inspection, Testing and Maintenance" chapter in NFPA 72, and include the following:

      1) Equipment tested.
      2) Frequency of testing of installed components.
      3) Frequency of inspection of installed components.
      4) Requirements and recommendations related to results of maintenance.
      5) Manufacturer's user training manuals.

   h. Manufacturer's required maintenance related to system warranty requirements.
   i. Abbreviated operating instructions for mounting at FACU and each annunciator unit.

B. Software and Firmware Operational Documentation:

1. Software operating and upgrade manuals.
2. Program Software Backup: On USB media and approved online or cloud solution.
3. Device address list.
4. Printout of software application and graphic screens.

1.7 MAINTENANCE MATERIAL SUBMITTALS

A. Extra Stock Material: Furnish extra materials that match products installed and that are packaged with protective covering for storage and identified with labels describing contents.

1. Lamps for Remote Indicating Lamp Units: Quantity equal to 10 percent of amount installed, but no fewer than one unit.
2. Lamps for Strobe Units: Quantity equal to 10 percent of amount installed, but no fewer than one unit.
3. Smoke Detectors, Fire Detectors: Quantity equal to 10 percent of amount of each type installed, but no fewer than one unit of each type.

4. Detector Bases: Quantity equal to two percent of amount of each type installed, but no fewer than one unit of each type.
5. Keys and Tools: One extra set for access to locked or tamperproofed components.
6. Audible and Visual Notification Appliances: One of each type installed.
7. Fuses: Two of each type installed in system. Provide in box or cabinet with compartments marked with fuse types and sizes.

1.8 QUALITY ASSURANCE

A. Installer Qualifications:

1. Personnel must be trained and certified by manufacturer for installation of units required for this Project.
2. Installation must be by personnel certified by NICET as fire-alarm Level III technician.
3. Obtain certification by NRTL in accordance with NFPA 72.
4. Licensed or certified by authorities having jurisdiction.

1.9 WARRANTY

A. Special Warranty: Manufacturer agrees to repair or replace fire-alarm system equipment and components that fail because of defects in materials or workmanship within specified warranty period.

1. Warranty Period: ~~Five years~~ **One year** from date of Substantial Completion.

PART 2 - PRODUCTS

2.1 ADDRESSABLE FIRE-ALARM SYSTEM

A. Description:

1. Noncoded, UL-certified addressable system, with multiplexed signal transmission and voice -and-strobe notification for evacuation.

B. Performance Criteria:

1. Regulatory Requirements:

a. Fire-Alarm Components, Devices, and Accessories: Listed and labeled by a NRTL in accordance with NFPA 70 for use with selected fire-alarm system and marked for intended location and application.

2. General Characteristics:

a. Automatic sensitivity control of certain smoke detectors.
b. Fire-alarm signal initiation must be by one or more of the following devices and systems:

1) Manual stations.
2) Heat detectors.
3) Smoke detectors.
4) Duct smoke detectors.
5) Carbon monoxide detectors.

6) Automatic sprinkler system water flow.
7) Preaction system.
8) Fire-extinguishing system operation.
9) Dry system pressure flow switch.

c. Fire-alarm signal must initiate the following actions:

1) Continuously operate alarm notification appliances , including voice evacuation notices.
2) Identify alarm and specific initiating device at FACU , connected network control panels, off-premises network control panels, and remote annunciators.
3) Transmit alarm signal to remote alarm receiving station.
4) Unlock electric door locks in designated egress paths.
5) Release fire and smoke doors held open by magnetic door holders.
6) Activate voice/alarm communication system.
7) Switch HVAC equipment controls to fire-alarm mode.
8) Close smoke dampers in air ducts of designated air-conditioning duct systems.
9) Recall elevators to primary or alternate recall floors.
10) Activate elevator power shunt trip.
11) Record events in system memory.
12) Indicate device in alarm on remote annunciator.

d. Supervisory signal initiation must be by one or more of the following devices and actions:

1) Valve supervisory switch.
2) High- or low-air-pressure switch of dry-pipe or preaction sprinkler system.
3) Elevator shunt-trip supervision.
4) Independent fire-detection and -suppression systems.
5) Zones or individual devices have been disabled.
6) FACU has lost communication with network.

e. System trouble signal initiation must be by one or more of the following devices and actions:

1) Open circuits, shorts, and grounds in designated circuits.
2) Opening, tampering with, or removing alarm-initiating and supervisory signal-initiating devices.
3) Loss of communication with addressable sensor, input module, relay, control module, remote annunciator, printer interface, or Ethernet module.
4) Loss of primary power at FACU.
5) Ground or single break in internal circuits of FACU.
6) Abnormal ac voltage at FACU.
7) Break in standby battery circuitry.
8) Failure of battery charging.
9) Abnormal position of switch at FACU or annunciator.
10) Voice signal amplifier failure.

f. System Supervisory Signal Actions:

1) Identify specific device initiating event at FACU , connected network control panels, off-premises network control panels, and remote annunciators.
2) After time delay of 200 seconds , transmit trouble or supervisory signal to remote alarm receiving station.
3) Transmit system status to building management system.
4) Display system status on remote annunciator.

g. Network Communications:

1) Provide network communications for fire-alarm system in accordance with fire-alarm manufacturer's written instructions.
2) Provide network communications pathway per manufacturer's written instructions and requirements in NFPA 72 and NFPA 70.

h. Device Guards:

1) Description: Welded wire mesh of size and shape for manual station, smoke detector, gong, or other device requiring protection.

a) Factory fabricated and furnished by device manufacturer.
b) Finish: Paint of color to match protected device.

i. Document Storage Box:

1) Description: Enclosure to accommodate standard 8-1/2-by-11 inch manuals and loose document records. Legend sheet will be permanently attached to door for system required documentation, key contacts, and system information. Provide two key ring holders with location to mount standard business cards for key contact personnel.
2) Material and Finish: 18-gauge cold-rolled steel; four mounting holes.
3) Color: Red powder-coat epoxy finish.
4) Labeling: Permanently screened with 1 inch high lettering "SYSTEM RECORD DOCUMENTS" with white indelible ink.
5) Security: Locked with 3/4 inch barrel lock. Provide solid 12 inch stainless steel piano hinge.

2.2 FIRE-ALARM CONTROL UNIT (FACU)

A. Manufacturers: Subject to compliance with requirements, undefined:

1. Autocall; brand of Johnson Controls International plc, Building Solutions North America.
2. Bosch Security Systems, Inc.
3. Edwards; Carrier Global Corporation.
4. Fike Corporation.
5. Fire-Lite Alarms; Honeywell International, Inc.
6. Gamewell-FCI; Honeywell International, Inc.
7. Mircom Technologies, Ltd.
8. Notifier; Honeywell International, Inc.
9. Potter Electric Signal Company, LLC.
10. Siemens Industry, Inc., Building Technologies Division.
11. Silent Knight; Honeywell International, Inc.
12. Simplex; brand of Johnson Controls International plc, Building Solutions North America.
13. Valcom, Inc. (Keltron Corporation).

B. Description: Field-programmable, microprocessor-based, modular, power-limited design with electronic modules.

C. Performance Criteria:

1. Regulatory Requirements: Comply with NFPA 72 and UL 864.

2. General Characteristics:

a. System software and programs must be held in nonvolatile flash, electrically erasable, programmable, read-only memory, retaining information through failure of primary and secondary power supplies.
b. Include real-time clock for time annotation of events on event recorder and printer.
c. Provide communication between FACU and remote circuit interface panels, annunciators, and displays.
d. FACU must be listed for connection to central-station signaling system service.
e. Provide nonvolatile memory for system database, logic, and operating system and event history. System must require no manual input to initialize in the event of complete power down condition. FACU must provide minimum 500-event history log.
f. Addressable Initiation Device Circuits: FACU must indicate which communication zones have been silenced and must provide selective silencing of alarm notification appliance by building communication zone.

1) Addressable Control Circuits for Operation of Notification Appliances and Mechanical Equipment: FACU must be listed for releasing service.

g. Alphanumeric Display and System Controls: Arranged for interface between human operator at FACU and addressable system components including annunciation and supervision. Display alarm, supervisory, and component status messages and programming and control menu.

1) Annunciator and Display: LCD, two line(s) of 40 characters, minimum.
2) Keypad: Arranged to permit entry and execution of programming, display, and control commands and to indicate control commands to be entered into system for control of smoke-detector sensitivity and other parameters.

h. Initiating-Device, Notification-Appliance, and Signaling-Line Circuits:

1) Pathway Class Designations: NFPA 72, Class A.
2) Pathway Survivability: Level 1.
3) Install no more than 100 addressable devices on each signaling-line circuit.
4) Install fault circuit isolators to comply with circuit performance requirements of NFPA 72 or with manufacturer's written instructions, whichever is more conservative.

i. Serial Interfaces:

1) One dedicated RS 485 port for remote station operation using point ID DACT.
2) One RS 485 port for remote annunciators, Ethernet module, or multi-interface module (printer port).
3) One USB port for PC configuration.
4) One RS 232 port for air-aspirating smoke detector connection.
5) One RS 232 port for voice evacuation interface.

j. Notification-Appliance Circuit:

1) Audible appliances must sound in three-pulse temporal pattern, as defined in NFPA 72.
2) Where notification appliances provide signals to sleeping areas, alarm signal must be 520 Hz square wave with intensity 15 dB above average ambient sound level or 5 dB above maximum sound level, or at least 75 dB(A-weighted), whichever is greater, measured at pillow.

3) Visual alarm appliances must flash in synchronization where multiple appliances are in same field of view, as defined in NFPA 72.

k. Elevator Recall: Initiate by one of the following alarm-initiating devices:

1) Elevator lobby detectors except lobby detector on designated floor.
2) Smoke detectors in elevator machine room.
3) Smoke detectors in elevator hoistway.

l. Elevator controller must be programmed to move cars to alternate recall floor if lobby detectors located on designated recall floors are activated.

m. Water-flow alarm connected to sprinkler in elevator shaft and elevator machine room must shut down elevators associated with location without time delay.

1) Water-flow switch associated with sprinkler in elevator pit may have delay to allow elevators to move to designated floor.

n. Door Controls: Door hold-open devices that are controlled by smoke detectors at doors in smoke-barrier walls must be connected to fire-alarm system.

o. Remote Smoke-Detector Sensitivity Adjustment: Controls must select specific addressable smoke detectors for adjustment, display their current status and sensitivity settings, and change those settings. Allow controls to be used to program repetitive, time-scheduled, and automated changes in sensitivity of specific detector groups. Record sensitivity adjustments and sensitivity-adjustment schedule changes in system memory, and print out final adjusted values on system printer.

p. Transmission to Remote Alarm Receiving Station: Automatically transmit alarm, supervisory, and trouble signals to remote alarm station.

q. Voice/Alarm Signaling Service: Central emergency communication system with redundant microphones, preamplifiers, amplifiers, and tone generators provided as special module that is part of FACU.

r. Indicate number of alarm channels for automatic, simultaneous transmission of different announcements to different zones or for manual transmission of announcements by use of central-control microphone. Amplifiers must comply with UL 1711.

1) Allow application of, and evacuation signal to, indicated number of zones and simultaneously allow voice paging to other zones selectively or in combination.
2) Programmable tone and message sequence selection.
3) Standard digitally recorded messages for "Evacuation" and "All Clear."
4) Generate tones to be sequenced with audio messages of type recommended by NFPA 72 and that are compatible with tone patterns of notification-appliance circuits of FACU.

s. Status Annunciator: Indicate status of various voice/alarm speaker zones and status of firefighters' two-way telephone communication zones.

t. Preamplifiers, amplifiers, and tone generators must automatically transfer to backup units, on primary equipment failure.

u. Printout of Events: On receipt of signal, print alarm, supervisory, and trouble events. Identify zone, device, and function. Include type of signal (alarm, supervisory, or trouble) and date and time of occurrence. Differentiate alarm signals from other printed indications. Also, print system reset event, including same information for device, location, date, and time. Commands initiate printing of list of existing alarm, supervisory, and trouble conditions in system and historical log of events.

v. Primary Power: 24 V(dc) obtained from 120 V(ac) service and power-supply module. Initiating devices, notification appliances, signaling lines, trouble signals, and supervisory and DACT must be powered by 24 V(dc) source.

w. Alarm current draw of entire fire-alarm system must not exceed 80 percent of power-supply module rating.
x. Secondary Power: 24 V(dc) supply system with batteries, automatic battery charger, and automatic transfer switch.
y. Batteries: Sealed lead calcium Sealed, valve-regulated, recombinant lead acid Vented, wet-cell pocket, plate nickel cadmium.

D. Accessories:

1. Instructions: Computer printout or typewritten instruction card mounted behind plastic or glass cover in stainless steel or aluminum frame. Include interpretation and describe appropriate response for displays and signals. Briefly describe functional operation of system under normal, alarm, and trouble conditions.

2.3 MANUAL FIRE-ALARM BOXES

A. Manufacturers: Subject to compliance with requirements, undefined:

1. Autocall; brand of Johnson Controls International plc, Building Solutions North America.
2. Bosch Security Systems, Inc.
3. Edwards; Carrier Global Corporation.
4. Federal Signal Corporation.
5. Fike Corporation.
6. Fire-Lite Alarms; Honeywell International, Inc.
7. Gamewell-FCI; Honeywell International, Inc.
8. Notifier; Honeywell International, Inc.
9. Potter Electric Signal Company, LLC.
10. Siemens Industry, Inc., Building Technologies Division.
11. Silent Knight; Honeywell International, Inc.
12. Simplex; brand of Johnson Controls International plc, Building Solutions North America.
13. Valcom, Inc. (Keltron Corporation).
14. Wheelock, Life Safety and Mass Notification; Eaton, Electrical Sector.

B. General Requirements for Manual Fire-Alarm Boxes: Comply with UL 38. Boxes must be finished in red with molded, raised-letter operating instructions in contrasting color; must show visible indication of operation; and must be mounted on recessed outlet box. If indicated as surface mounted, provide manufacturer's surface back box.

1. Double-action mechanism requiring two actions to initiate alarm, pull-lever type; with integral addressable module arranged to communicate manual-station status (normal, alarm, or trouble) to FACU.
2. Station Reset: Key- or wrench-operated switch.
3. Indoor Protective Shield: Factory-fabricated, clear plastic enclosure hinged at top to permit lifting for access to initiate alarm. Lifting cover actuates integral battery-powered audible horn intended to discourage false-alarm operation.
4. Weatherproof Protective Shield: Factory-fabricated, clear plastic enclosure hinged at top to permit lifting for access to initiate alarm.
5. Able to perform at up to 90 percent relative humidity at 90 deg F.
6. Material: Manual stations made of Lexan polycarbonate.
7. Able to be used in indoor outdoor areas.

2.4 SYSTEM SMOKE DETECTORS

A. Photoelectric Smoke Detectors:

1. Manufacturers: Subject to compliance with requirements, provide products by one of the following:

a. Autocall; brand of Johnson Controls International plc, Building Solutions North America.
b. Bosch Security Systems, Inc.
c. Edwards; Carrier Global Corporation.
d. Fire-Lite Alarms; Honeywell International, Inc.
e. Gamewell-FCI; Honeywell International, Inc.
f. Gentex Corporation.
g. Harrington Signal, Inc.
h. Notifier; Honeywell International, Inc.
i. Potter Electric Signal Company, LLC.
j. Siemens Industry, Inc., Building Technologies Division.
k. Silent Knight; Honeywell International, Inc.
l. Simplex; brand of Johnson Controls International plc, Building Solutions North America.

2. Performance Criteria:

a. Regulatory Requirements:

1) NFPA 72.
2) UL 268.

b. General Characteristics:

1) Detectors must be two-wire type.
2) Integral Addressable Module: Arranged to communicate detector status (normal, alarm, or trouble) to FACU.
3) Base Mounting: Detector and associated electronic components must be mounted in twist-lock module that connects to fixed base. Provide terminals in fixed base for connection to building wiring.
4) Self-Restoring: Detectors do not require resetting or readjustment after actuation to restore them to normal operation.
5) Integral Visual-Indicating Light: LED type, indicating detector has operated and power-on status.
6) Detector address must be accessible from FACU and must be able to identify detector's location within system and its sensitivity setting.
7) Operator at FACU, having designated access level, must be able to manually access the following for each detector:

a) Primary status.
b) Device type.
c) Present average value.
d) Present sensitivity selected.
e) Sensor range (normal, dirty, etc.).

8) Detector must have functional humidity range within 10 to 90 percent relative humidity.
9) Color: White.
10) Remote Control: Unless otherwise indicated, detectors must be digital-addressable type, individually monitored at FACU for calibration, sensitivity, and alarm condition and individually adjustable for sensitivity by FACU.

11) Rate-of-rise temperature characteristic of combination smoke- and heat-detection units must be selectable at FACU for 15 or 20 deg F per minute.
12) Fixed-temperature sensing characteristic of combination smoke- and heat-detection units must be independent of rate-of-rise sensing and must be settable at FACU to operate at 135 or 155 deg F.
13) Multiple levels of detection sensitivity for each sensor.
14) Sensitivity levels based on time of day.

2.5 DUCT SMOKE DETECTORS

A. Manufacturers: Subject to compliance with requirements, provide products by one of the following:

1. Autocall; brand of Johnson Controls International plc, Building Solutions North America.
2. Bosch Security Systems, Inc.
3. Edwards; Carrier Global Corporation.
4. Fire-Lite Alarms; Honeywell International, Inc.
5. Gamewell-FCI; Honeywell International, Inc.
6. Gentex Corporation.
7. Harrington Signal, Inc.
8. Notifier; Honeywell International, Inc.
9. Potter Electric Signal Company, LLC.
10. Siemens Industry, Inc., Building Technologies Division.
11. Silent Knight; Honeywell International, Inc.
12. Simplex; brand of Johnson Controls International plc, Building Solutions North America.

B. Description: Photoelectric-type, duct-mounted smoke detector.

C. Performance Criteria:

1. Regulatory Requirements:

a. NFPA 72.
b. UL 268A.

2. General Characteristics:

a. Detectors must be two-wire type.
b. Integral Addressable Module: Arranged to communicate detector status (normal, alarm, or trouble) to FACU.
c. Self-Restoring: Detectors do not require resetting or readjustment after actuation to restore them to normal operation.
d. Integral Visual-Indicating Light: LED type, indicating detector has operated and power-on status.
e. Detector address must be accessible from FACU and must be able to identify detector's location within system and its sensitivity setting.
f. Operator at FACU, having designated access level, must be able to manually access the following for each detector:

1) Primary status.
2) Device type.
3) Present average value.
4) Present sensitivity selected.
5) Sensor range (normal, dirty, etc.).

g. Weatherproof Duct Housing Enclosure: NEMA 250, Type 4X; NRTL listed for use with supplied detector for smoke detection in HVAC system ducts.
h. Each sensor must have multiple levels of detection sensitivity.
i. Sampling Tubes: Design and dimensions as recommended by manufacturer for specific duct size, air velocity, and installation conditions where applied.

2.6 CARBON MONOXIDE DETECTORS

A. Description: Carbon monoxide detector listed for connection to fire-alarm system.

B. Performance Criteria:

1. Regulatory Requirements:

a. NFPA 72
b. NFPA 720.
c. UL 2075.

2. General Characteristics:

a. Mounting: Adapter plate for outlet box mounting.
b. Testable by introducing test carbon monoxide into sensing cell.
c. Detector must provide alarm contacts and trouble contacts.
d. Detector must send trouble alarm when nearing end-of-life, power supply problems, or internal faults.
e. Locate, mount, and wire in accordance with manufacturer's written instructions.
f. Provide means for addressable connection to fire-alarm system.
g. Test button simulates alarm condition.

2.7 HEAT DETECTORS

A. Combination-Type Heat Detectors:

1. Manufacturers: Subject to compliance with requirements, undefined:

a. Autocall; brand of Johnson Controls International plc, Building Solutions North America.
b. Bosch Security Systems, Inc.
c. Edwards; Carrier Global Corporation.
d. Fire-Lite Alarms; Honeywell International, Inc.
e. Gamewell-FCI; Honeywell International, Inc.
f. Gentex Corporation.
g. Harrington Signal, Inc.
h. Notifier; Honeywell International, Inc.
i. Potter Electric Signal Company, LLC.
j. Siemens Industry, Inc., Building Technologies Division.
k. Silent Knight; Honeywell International, Inc.
l. Simplex; brand of Johnson Controls International plc, Building Solutions North America.
m. Valcom, Inc. (Keltron Corporation).

2. Performance Criteria:

a. Regulatory Requirements:

1) NFPA 72.
2) UL 521.

b. General Characteristics:

1) Temperature sensors must test for and communicate sensitivity range of device.

c. Actuated by fixed temperature of 135 deg F or rate of rise that exceeds 15 deg F per minute unless otherwise indicated.
d. Mounting: Twist-lock base interchangeable with smoke-detector bases.
e. Integral Addressable Module: Arranged to communicate detector status (normal, alarm, or trouble) to FACU.
f. Detector must have functional humidity range of 10 to 90 percent relative humidity.
g. Color: White.

B. Fixed-Temperature-Type Heat Detectors:

1. Manufacturers: Subject to compliance with requirements, provide products by one of the following:

a. Autocall; brand of Johnson Controls International plc, Building Solutions North America.
b. Bosch Security Systems, Inc.
c. Edwards; Carrier Global Corporation.
d. Fire-Lite Alarms; Honeywell International, Inc.
e. Gamewell-FCI; Honeywell International, Inc.
f. Gentex Corporation.
g. Harrington Signal, Inc.
h. Notifier; Honeywell International, Inc.
i. Potter Electric Signal Company, LLC.
j. Siemens Industry, Inc., Building Technologies Division.
k. Silent Knight; Honeywell International, Inc.
l. Simplex; brand of Johnson Controls International plc, Building Solutions North America.
m. Valcom, Inc. (Keltron Corporation).

2. Performance Criteria:

a. Regulatory Requirements:

1) NFPA 72.
2) UL 521.

b. General Characteristics:

1) Actuated by temperature that exceeds fixed temperature of 190 deg F.
2) Mounting: Twist-lock base interchangeable with smoke-detector bases.
3) Integral Addressable Module: Arranged to communicate detector status (normal, alarm, or trouble) to FACU.
4) Detector must have functional humidity range of 10 to 90 percent.
5) Color: White.

2.8 FIRE-ALARM NOTIFICATION APPLIANCES

A. Fire-Alarm Audible Notification Appliances:

1. Manufacturers: Subject to compliance with requirements, provide products by one of the following:

a. Autocall; brand of Johnson Controls International plc, Building Solutions North America.
b. Edwards; Carrier Global Corporation.
c. Federal Signal Corporation.
d. Gentex Corporation.
e. Harrington Signal, Inc.
f. Notifier; Honeywell International, Inc.
g. Potter Electric Signal Company, LLC.
h. Siemens Industry, Inc., Building Technologies Division.
i. Simplex; brand of Johnson Controls International plc, Building Solutions North America.
j. Valcom, Inc. (Keltron Corporation).
k. Wheelock, Life Safety and Mass Notification; Eaton, Electrical Sector.

2. Description: Horns, bells, or other notification devices that cannot output voice messages.
3. Performance Criteria:

a. Regulatory Requirements:

1) NFPA 72.

b. General Characteristics:

1) Individually addressed, connected to signaling-line circuit, equipped for mounting as indicated, and with screw terminals for system connections.
2) Connected to notification-appliance signal circuits, zoned as indicated, equipped for mounting as indicated, and with screw terminals for system connections.
3) Audible notification appliances must have functional humidity range of 10 to 95 percent relative humidity.
4) ISO Temporal 3 Evacuation Tone: 90 plus or minus 4 dB(A-weighted) at 24 V.
5) Combination Devices: Factory-integrated audible and visible devices in single-mounting assembly, equipped for mounting as indicated, and with screw terminals for system connections.

B. Fire-Alarm Voice/Tone Notification Appliances:

1. Manufacturers: Subject to compliance with requirements, provide products by one of the following:

a. Autocall; brand of Johnson Controls International plc, Building Solutions North America.
b. Edwards; Carrier Global Corporation.
c. Federal Signal Corporation.
d. Gentex Corporation.
e. Harrington Signal, Inc.
f. Notifier; Honeywell International, Inc.
g. Potter Electric Signal Company, LLC.
h. Siemens Industry, Inc., Building Technologies Division.
i. Simplex; brand of Johnson Controls International plc, Building Solutions North America.
j. Valcom, Inc. (Keltron Corporation).
k. Wheelock, Life Safety and Mass Notification; Eaton, Electrical Sector.

2. Description: Notification appliances capable of outputting voice evacuation messages.

3. Performance Criteria:

a. Regulatory Requirements:

1) NFPA 72.
2) UL 1480.

b. General Characteristics:

1) Speakers for Voice Notification: Locate speakers for voice notification to provide intelligibility requirements of "Notification Appliances" and "Emergency Communications Systems" chapters in NFPA 72.
2) Low-Range Units: Rated 0.25 to 2 W.
3) Mounting: semi-recessed or.
4) Matching Transformers: Tap range matched to acoustical environment of speaker location.
5) Combination Devices: Factory-integrated audible and visible devices in single-mounting assembly, equipped for mounting as indicated, and with screw terminals for system connections.

C. Fire-Alarm Visible Notification Appliances:

1. Manufacturers: Subject to compliance with requirements, provide products by one of the following:

a. Autocall; brand of Johnson Controls International plc, Building Solutions North America.
b. Edwards; Carrier Global Corporation.
c. Federal Signal Corporation.
d. Gentex Corporation.
e. Harrington Signal, Inc.
f. Notifier; Honeywell International, Inc.
g. Potter Electric Signal Company, LLC.
h. Siemens Industry, Inc., Building Technologies Division.
i. Simplex; brand of Johnson Controls International plc, Building Solutions North America.
j. Valcom, Inc. (Keltron Corporation).
k. Wheelock, Life Safety and Mass Notification; Eaton, Electrical Sector.

2. Performance Criteria:

a. Regulatory Requirements:

1) NFPA 72.
2) UL 1971.

b. General Characteristics:

1) Rated Light Output:

a) 15/30/75/110 cd, selectable in field.

2) Clear or nominal white polycarbonate lens mounted on aluminum faceplate.
3) Mounting: Wall mounted unless otherwise indicated.
4) For units with guards to prevent physical damage, light output ratings must be determined with guards in place.
5) Flashing must be in temporal pattern, synchronized with other units.
6) Strobe Leads: Factory connected to screw terminals.

7) Mounting Faceplate: Factory finished, white.

2.9 EMERGENCY RESPONDER RADIO COVERAGE SYSTEM

A. Description: Emergency responder radio coverage systems use a combination of bidirectional amplifiers and distributed antenna systems to boost signals for sustaining two-way radio communications throughout a facility, including stairwells, underground tunnels, parking garages, and other challenging areas.

B. Performance Criteria:

1. Regulatory Requirements:

a. In accordance with NFPA 72, emergency responder radio coverage systems must be designed, installed, and maintained in accordance with NFPA 1221.

2. General Characteristics:

a. Where emergency responder radio coverage system is used in lieu of two-way in-building wired emergency communications system, it must have pathway survivability of Level 1, 2, or 3 as defined in NFPA 72.
b. Where leaky feeder cable is used as antenna, it must neither be required to be installed in metal raceway nor meet survivability requirements.
c. Feeder and riser coaxial cables must be rated as plenum cables.
d. Feeder coaxial cables must be connected to riser coaxial cables using hybrid coupler devices of value determined by overall design.
e. Where emergency responder radio coverage system is used in lieu of two-way in-building wired emergency communications system, design of system must be approved by authorities having jurisdiction. Riser coaxial cables must be rated as riser cables and routed through 2-hour-rated enclosure.
f. Connection between riser and feeder coaxial cables must be made within 2-hour-rated enclosure, and passage of feeder cable in and out of 2-hour-rated enclosure must be firestopped to 2-hour ratings.

2.10 FIRE-ALARM REMOTE ANNUNCIATORS

A. Manufacturers: Subject to compliance with requirements, provide products by the following:

1. Bosch Security Systems, Inc.

B. Performance Criteria:

1. Regulatory Requirements:

a. NFPA 72.

2. General Characteristics:

a. Annunciator functions must match those of FACU for alarm, supervisory, and trouble indications. Manual switching functions must match those of FACU, including acknowledging, silencing, resetting, and testing.

1) Mounting: Flush cabinet, NEMA 250, Type 1.

b. Display Type and Functional Performance: Alphanumeric display and LED indicating lights must match those of FACU. Provide controls to acknowledge, silence, reset, and test functions for alarm, supervisory, and trouble signals.

2.11 FIRE-ALARM ADDRESSABLE INTERFACE DEVICES

A. Manufacturers: Subject to compliance with requirements, provide products by one of the following:

1. Bosch Security Systems, Inc.
2. Notifier; Honeywell International, Inc.

B. Performance Criteria:

1. Regulatory Requirements:

a. NFPA 72.

2. General Characteristics:

a. Include address-setting means on module.
b. Store internal identifying code for control panel use to identify module type.
c. Listed for controlling HVAC fan motor controllers.
d. Monitor Module: Microelectronic module providing system address for alarm-initiating devices for wired applications with normally open contacts.
e. Integral Relay: Capable of providing direct signal to elevator controller to initiate elevator recall to circuit-breaker shunt trip for power shutdown.

1) Allow control panel to switch relay contacts on command.
2) Have minimum of two normally open and two normally closed contacts available for field wiring.

f. Control Module:

1) Operate notification devices.
2) Operate solenoids for use in sprinkler service.

2.12 DIGITAL ALARM COMMUNICATOR TRANSMITTERS (DACTs)

A. Manufacturers: Subject to compliance with requirements, provide products by one of the following:

1. Bosch Security Systems, Inc.
2. Edwards; Carrier Global Corporation.
3. Potter Electric Signal Company, LLC.

B. Performance Criteria:

1. Regulatory Requirements:

a. NFPA 72.

2. General Characteristics:

a. DACT must be acceptable to remote central station and must be listed for fire-alarm use.

b. Functional Performance: Unit must receive alarm, supervisory, or trouble signal from FACU and automatically capture two telephone line(s) and dial preset number for remote central station. When contact is made with central station(s), signals must be transmitted. If service on either line is interrupted for longer than 45 seconds, transmitter must initiate local trouble signal and transmit signal indicating loss of telephone line to remote alarm receiving station over remaining line. Transmitter must automatically report telephone service restoration to central station. If service is lost on both telephone lines, transmitter must initiate local trouble signal.

c. Local functions and display at DACT must include the following:

1) Verification that both telephone lines are available.
2) Programming device.
3) LED display.
4) Manual test report function and manual transmission clear indication.
5) Communications failure with central station or FACU.

d. Digital data transmission must include the following:

1) Address of alarm-initiating device.
2) Address of supervisory signal.
3) Address of trouble-initiating device.
4) Loss of ac supply.
5) Loss of power.
6) Low battery.
7) Abnormal test signal.
8) Communication bus failure.

e. Secondary Power: Integral rechargeable battery and automatic charger.

f. Self-Test: Conducted automatically every 24 hours with report transmitted to central station.

PART 3 - EXECUTION

3.1 EXAMINATION

A. Examine areas and conditions for compliance with requirements for ventilation, temperature, humidity, and other conditions affecting performance of the Work.

1. Verify that manufacturer's written instructions for environmental conditions have been permanently established in spaces where equipment and wiring are installed, before installation begins.

B. Examine roughing-in for electrical connections to verify actual locations of connections before installation.

C. Proceed with installation only after unsatisfactory conditions have been corrected.

3.2 PREPARATION

A. Protection of In-Place Conditions: Protect devices during construction unless devices are placed in service to protect facility during construction.

3.3 INSTALLATION OF EQUIPMENT

A. Comply with NECA 305, NFPA 72, NFPA 101, and requirements of authorities having jurisdiction for installation and testing of fire-alarm equipment. Install electrical wiring to comply with requirements in NFPA 70 including, but not limited to, Article 760, "Fire Alarm Systems."

1. Devices placed in service before other trades have completed cleanup must be replaced.
2. Devices installed, but not yet placed, in service must be protected from construction dust, debris, dirt, moisture, and damage in accordance with manufacturer's written storage instructions.

B. Install wall-mounted equipment, with tops of cabinets not more than 78 inch above finished floor.

1. Comply with requirements for seismic-restraint devices specified in Section 270548.16 "Seismic Controls for Communications Systems."

C. Manual Fire-Alarm Boxes:

1. Install manual fire-alarm box in normal path of egress within 60 inch of exit doorway.
2. Mount manual fire-alarm box on background of contrasting color.
3. Operable part of manual fire-alarm box must be between 42 and 48 inch above floor level. Devices must be mounted at same height unless otherwise indicated.

D. Smoke- and Heat-Detector Spacing:

1. Comply with "Smoke-Sensing Fire Detectors" section in "Initiating Devices" chapter in NFPA 72, for smoke-detector spacing.
2. Comply with "Heat-Sensing Fire Detectors" section in "Initiating Devices" chapter in NFPA 72, for heat-detector spacing.
3. Smooth ceiling spacing must not exceed 30 ft..
4. Spacing of detectors for irregular areas, for irregular ceiling construction, and for high ceiling areas must be determined in accordance with Annex A or Annex B in NFPA 72.
5. HVAC: Locate detectors not closer than 36 inch from air-supply diffuser or return-air opening.
6. Lighting Fixtures: Locate detectors not closer than 12 inch from lighting fixture and not directly above pendant mounted or indirect lighting.

E. Install cover on each smoke detector that is not placed in service during construction. Cover must remain in place except during system testing. Remove cover prior to system turnover.

F. Duct Smoke Detectors: Comply with NFPA 72 and NFPA 90A. Install sampling tubes so they extend full width of duct. Tubes more than 36 inch long must be supported at both ends.

1. Do not install smoke detector in duct smoke-detector housing during construction. Install detector only during system testing and prior to system turnover.

G. Elevator Shafts: Coordinate temperature rating and location with sprinkler rating and location. Do not install smoke detectors in sprinklered elevator shafts.

H. Single-Station Smoke Detectors: Where more than one smoke alarm is installed within dwelling or suite, they must be connected so that operation of smoke alarm causes alarm in smoke alarms to sound.

I. Remote Status and Alarm Indicators: Install in visible location near each smoke detector, sprinkler water-flow switch, and valve-tamper switch that is not readily visible from normal viewing position.

J. Audible Alarm-Indicating Devices: Install not less than 6 inch below ceiling. Install bells and horns on flush-mounted back boxes with device-operating mechanism concealed behind grille. Install devices at same height unless otherwise indicated.

K. Visible Alarm-Indicating Devices: Install adjacent to each alarm bell or alarm horn and at least 6 inch below ceiling. Install devices at same height unless otherwise indicated.

L. Device Location-Indicating Lights: Locate in public space near device they monitor.

3.4 ELECTRICAL CONNECTIONS

A. Connect wiring in accordance with Section 260519 "Low-Voltage Electrical Power Conductors and Cables."

B. Ground equipment in accordance with Section 260526 "Grounding and Bonding for Electrical Systems."

C. Install electrical devices furnished by manufacturer, but not factory mounted, in accordance with NFPA 70 and NECA 1.

D. Install nameplate for each electrical connection, indicating electrical equipment designation and circuit number feeding connection.

1. Nameplate must be laminated acrylic or melamine plastic signs, as specified in Section 260553 "Identification for Electrical Systems."
2. Nameplate must be laminated acrylic or melamine plastic signs with black background and engraved white letters at least 1/2 inch high.

3.5 CONTROL CONNECTIONS

A. Install control and electrical power wiring to field-mounted control devices.

B. Connect control wiring in accordance with Section 260523 "Control-Voltage Electrical Power Cables."

C. Install nameplate for each control connection, indicating field control panel designation and I/O control designation feeding connection.

3.6 PATHWAYS

A. Pathways above recessed ceilings and in inaccessible locations may be routed exposed.

1. Exposed pathways located less than 96 inch above floor must be installed in EMT.

B. Pathways must be installed in EMT.

C. Exposed EMT must be painted red enamel.

3.7 CONNECTIONS

A. For fire-protection systems related to doors in fire-rated walls and partitions and to doors in smoke partitions, comply with requirements in Section 087100 "Door Hardware." Connect hardware and devices to fire-alarm system.

1. Verify that hardware and devices are listed for use with installed fire-alarm system before making connections.

B. Make addressable connections with supervised interface device to the following devices and systems. Install interface device less than 36 inch from device controlled. Make addressable confirmation connection when such feedback is available at device or system being controlled.

1. Alarm-initiating connection to smoke-control system (smoke management) at firefighters' smoke-control system panel.
2. Smoke dampers in air ducts of designated HVAC duct systems.
3. Magnetically held-open doors.
4. Electronically locked doors and access gates.
5. Alarm-initiating connection to elevator recall system and components.
6. Alarm-initiating connection to activate emergency lighting control.
7. Alarm-initiating connection to activate emergency shutoffs for gas and fuel supplies.
8. Supervisory connections at valve supervisory switches.
9. Supervisory connections at low-air-pressure switch of each dry-pipe sprinkler system.
10. Supervisory connections at elevator shunt-trip breaker.
11. Data communication circuits for connection to building management system.
12. Supervisory connections at fire-extinguisher locations.
13. Supervisory connections at fire-pump power failure including dead-phase or phase-reversal condition.
14. Supervisory connections at fire-pump engine control panel.

3.8 IDENTIFICATION

A. Identify system components, wiring, cabling, and terminals. Comply with requirements for identification specified in Section 270553 "Identification for Communications Systems."

B. Install framed instructions in location visible from FACU.

3.9 GROUNDING

A. Ground FACU and associated circuits in accordance with Section 260526 "Grounding and Bonding for Electrical Systems."

B. Ground shielded cables at control panel location only. Insulate shield at device location.

3.10 FIELD QUALITY CONTROL

A. Field tests must be witnessed by authorities having jurisdiction.

B. Administrant for Tests and Inspections:

1. Administer and perform tests and inspections.

C. Tests and Inspections:

1. Visual Inspection: Conduct visual inspection prior to testing.

a. Inspection must be based on completed record Drawings and system documentation that is required by "Completion Documents, Preparation" table in "Documentation" section of "Fundamentals" chapter in NFPA 72.
b. Comply with "Visual Inspection Frequencies" table in "Inspection" section of "Inspection, Testing and Maintenance" chapter in NFPA 72; retain "Initial/Reacceptance" column and list only installed components.

2. System Testing: Comply with "Test Methods" table in "Testing" section of "Inspection, Testing and Maintenance" chapter in NFPA 72.
3. Test audible appliances for public operating mode in accordance with manufacturer's written instructions. Perform test using portable sound-level meter complying with Type 2 requirements in ASA S1.4 Part 1/IEC 61672-1.
4. Test audible appliances for private operating mode in accordance with manufacturer's written instructions.
5. Test visible appliances for public operating mode in accordance with manufacturer's written instructions.
6. Factory-authorized service representative must prepare "Fire Alarm System Record of Completion" in "Documentation" section of "Fundamentals" chapter in NFPA 72 and "Inspection and Testing Form" in "Records" section of "Inspection, Testing and Maintenance" chapter in NFPA 72.

D. Reacceptance Testing: Perform reacceptance testing to verify proper operation of added or replaced devices and appliances.

E. Fire-alarm system will be considered defective if it does not pass tests and inspections.

F. Prepare test and inspection reports.

G. Maintenance Test and Inspection: Perform tests and inspections listed for weekly, monthly, quarterly, and semiannual periods. Use forms developed for initial tests and inspections.

H. Annual Test and Inspection: One year after date of Substantial Completion, test fire-alarm system complying with visual and testing inspection requirements in NFPA 72. Use forms developed for initial tests and inspections.

3.11 DEMONSTRATION

A. Train Owner's maintenance personnel to adjust, operate, and maintain fire-alarm system. Allow Owner to record training.

3.12 MAINTENANCE

A. Maintenance Service: Beginning at Substantial Completion, maintenance service must include 12 months' full maintenance by skilled employees of manufacturer's designated service organization. Include preventive maintenance, repair or replacement of worn or defective components, lubrication, cleaning, and adjusting as required for proper operation. Parts and supplies must be manufacturer's authorized replacement parts and supplies.

1. Include visual inspections in accordance with "Visual Inspection Frequencies" table in "Testing" paragraph of "Inspection, Testing and Maintenance" chapter in NFPA 72.

2. Perform tests in "Test Methods" table in "Testing" paragraph of "Inspection, Testing and Maintenance" chapter in NFPA 72.
3. Perform tests per "Testing Frequencies" table in "Testing" paragraph of "Inspection, Testing and Maintenance" chapter in NFPA 72.

3.13 SOFTWARE SERVICE AGREEMENT

A. Comply with UL 864.

B. Technical Support: Beginning at Substantial Completion, service agreement must include software support for two years.

C. Upgrade Service: At Substantial Completion, update software to latest version. Install and program software upgrades that become available within two years from date of Substantial Completion. Upgrading software must include operating system and new or revised licenses for using software.

1. Upgrade Notice: At least 30 days to allow Owner to schedule access to system and to upgrade computer equipment if necessary.

END OF SECTION 284621.11

THE LINE SHOWN ABOVE IS EXACTLY ONE INCH LONG ON ALL SHEETS ORIGINAL PAGE SIZE

NOTE: ALIGN FACE OF PRE-ENGINEERED PARAPET CAP AROUND BUILDING PERIMETER AT METAL PANEL, MASONRY, AND CURTAIN WALL CONDITIONS

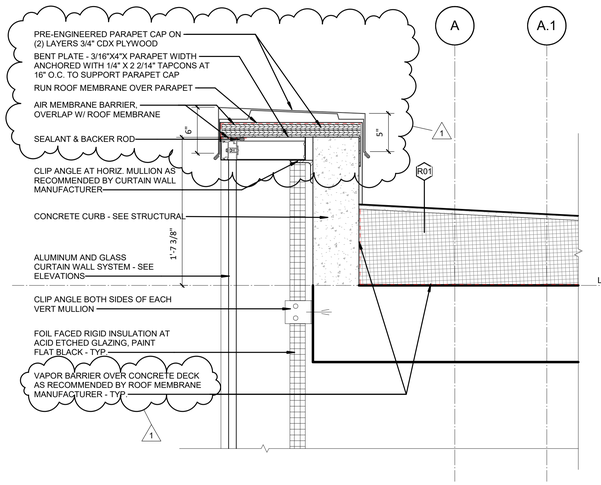

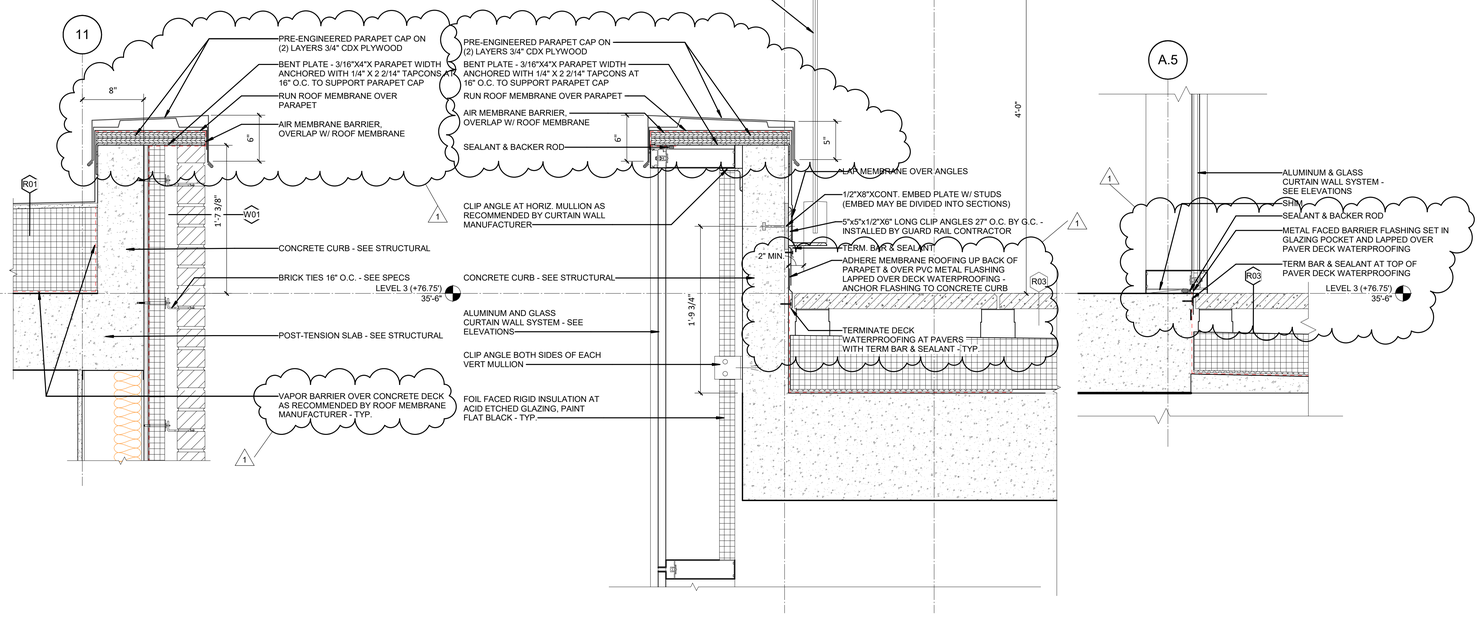

B1 SECT. DTL. - NORTH TERRACE PARAPET AT CURTAIN WALL
1 1/2" = 1'-0"

B2 SECT. DTL. - NORTH TERRACE PARAPET
1 1/2" = 1'-0"

B4 SECT. DTL. - NORTH TERRACE PARAPET AT PAVERS
1 1/2" = 1'-0"

B6 SECT. DTL. - CURTAIN WALL SILL
1 1/2" = 1'-0"

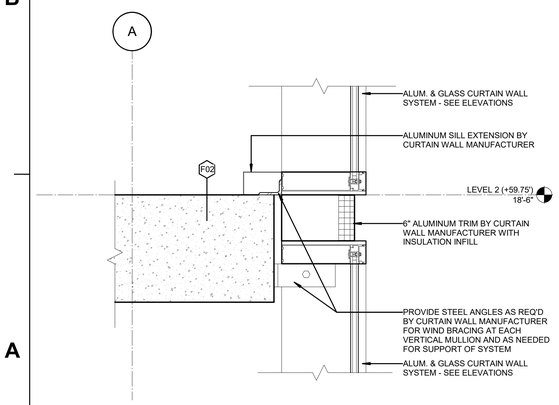

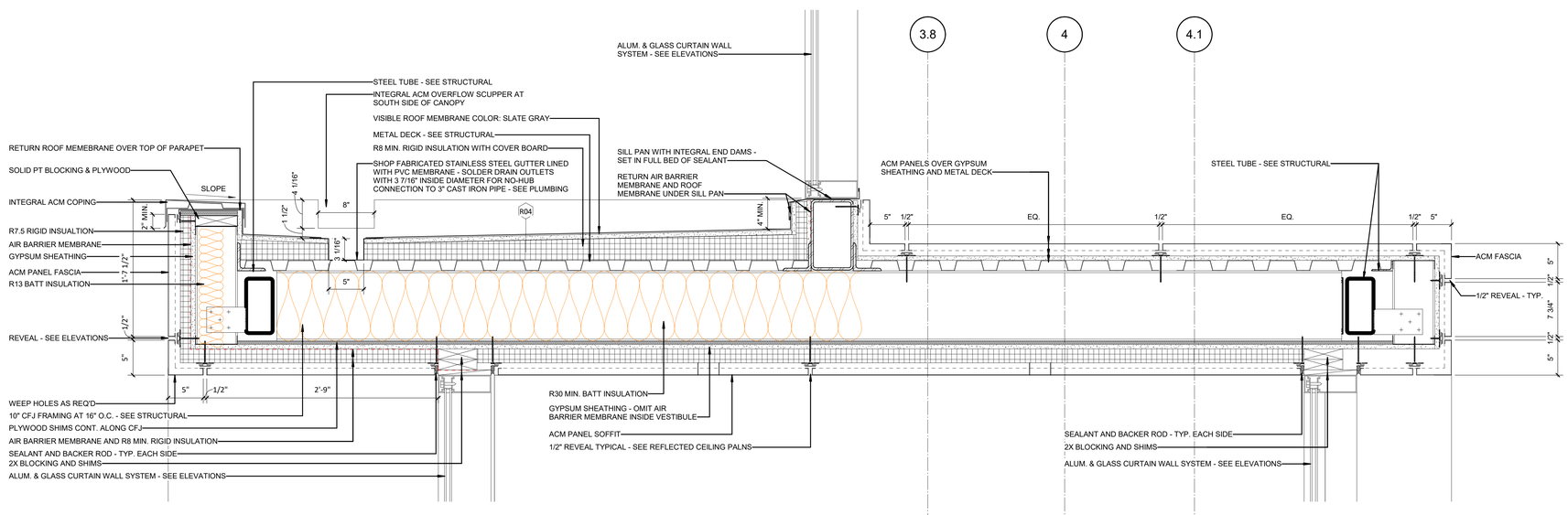

A1 SECT. DTL. - CW TRIM AT SLAB
1 1/2" = 1'-0"

A2 SECT. DTL. - LIBRARY VESTIBULE
1 1/2" = 1'-0"

101 NORTH THIRD STREET, SUITE 500
WILMINGTON, NORTH CAROLINA 28401
TEL. 910.790.9901 FAX. 910.790.3111
WWW.LS3P.COM

LS3P ASSOCIATES LTD. REGISTERED ARCHITECTURAL COMPANY CERT. NO. 50417 WILMINGTON, NORTH CAROLINA

COPYRIGHT 2023 ALL RIGHTS RESERVED. PRINTED OR ELECTRONIC DRAWINGS AND DOCUMENTATION MAY NOT BE REPRODUCED IN ANY FORM WITHOUT WRITTEN PERMISSION FROM LS3P ASSOCIATES LTD.

Project Grace

Grace Street
Wilmington, NC 28401

LS3P PROJECT: 7701-177600

Δ	DATE	DESCRIPTION
0	2023.05.22	PERMIT SET
1	2023.06.22	ADDENDUM #2

SHEET NAME:
EXTERIOR WALL SECTION DETAILS

ORIG SUBMISSION: 2023.05.22

SHEET:
A-511

PERMIT SET

6/21/2023 4:36:04 PM

E D C B A

1 2 3 4 5 6

THE LINE SHOWN ABOVE IS EXACTLY ONE INCH LONG ON ALL ARCH D SHEETS ORIGINAL PLOT SIZE

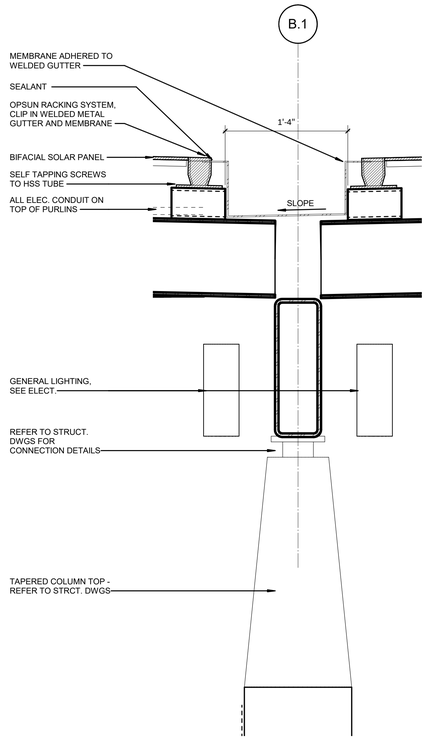

D2 SECT. DTL. - PV CANOPY GUTTER

1 1/2" = 1'-0"

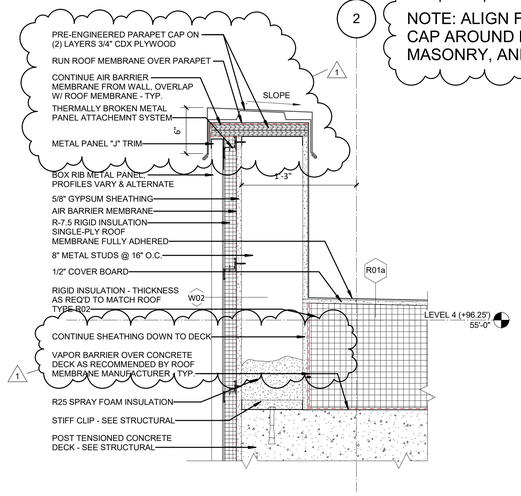

D3 SECT. DTL. - HIGH ROOF PARAPET

1 1/2" = 1'-0"

NOTE: ALIGN FACE OF PRE-ENGINEERED PARAPET CAP AROUND BUILDING PERIMETER AT METAL PANEL, MASONRY, AND CURTAIN WALL CONDITIONS

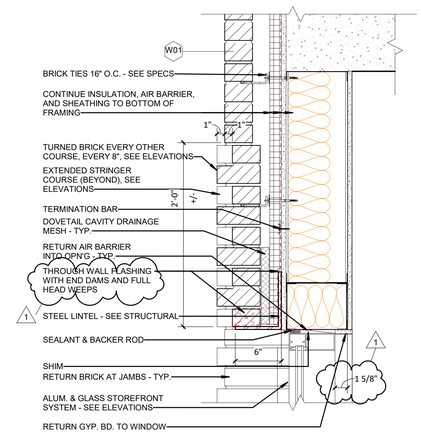

D5 SECT. DTL. - RECESSED WINDOW HEAD

1 1/2" = 1'-0"

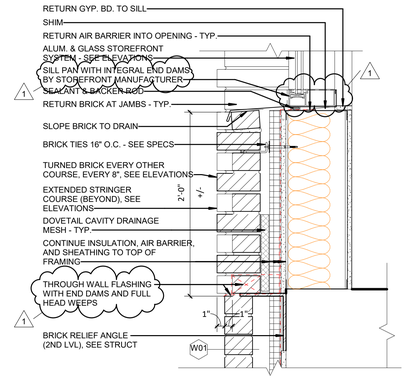

B5 SECT. DTL. - RECESSED WINDOW SILL

1 1/2" = 1'-0"

101 NORTH THIRD STREET, SUITE 500
WILMINGTON, NORTH CAROLINA 28401
TEL. 910.790.9901 FAX. 910.790.3111
WWW.LS3P.COM

LS3P ASSOCIATES LTD. REGISTERED ARCHITECTURAL COMPANY CERT. NO. 50417 WILMINGTON, NORTH CAROLINA

COPYRIGHT 2023 ALL RIGHTS RESERVED. PRINTED OR ELECTRONIC DRAWINGS AND DOCUMENTATION MAY NOT BE REPRODUCED IN ANY FORM WITHOUT WRITTEN PERMISSION FROM LS3P ASSOCIATES LTD.

Project Grace

Grace Street
Wilmington, NC 28401

LS3P PROJECT: 7701-177600

Δ	DATE	DESCRIPTION
0	2023.05.22	PERMIT SET
1	2023.06.22	ADDENDUM #2

SHEET NAME:
EXTERIOR WALL SECTION DETAILS

ORIG SUBMISSION: 2023.05.22

SHEET:
A-512

PERMIT SET

6/21/2023 4:36:06 PM

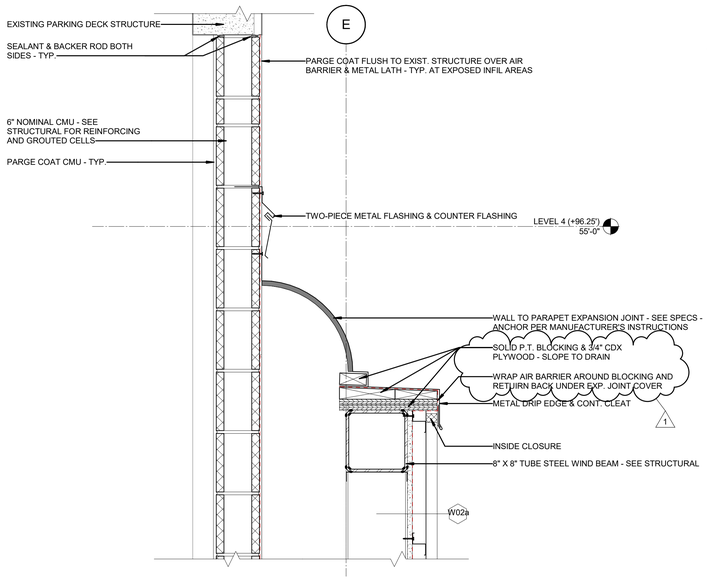

D1 SECT. DTL. - ROOF JOINT AT TERRACE/ PD

1 1/2" = 1'-0"

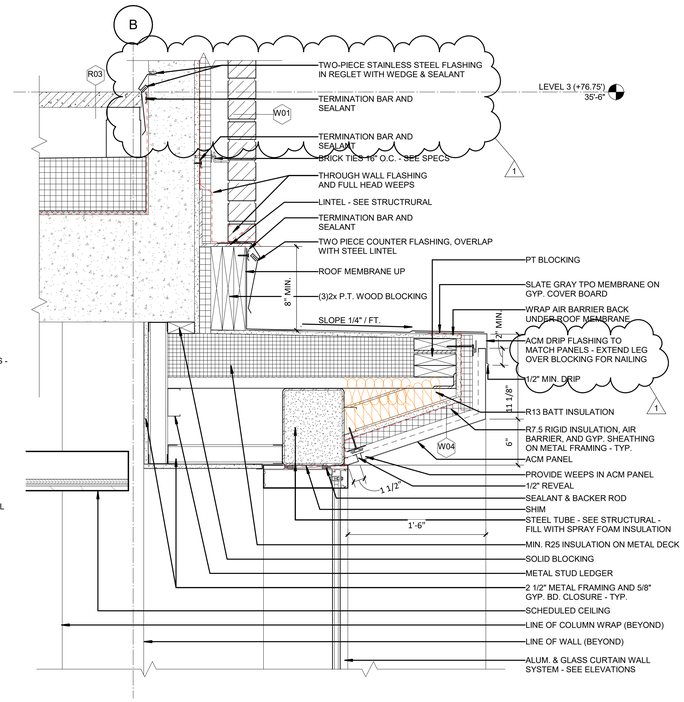

C2 SECT. DTL. - PORTAL HEAD

1 1/2" = 1'-0"

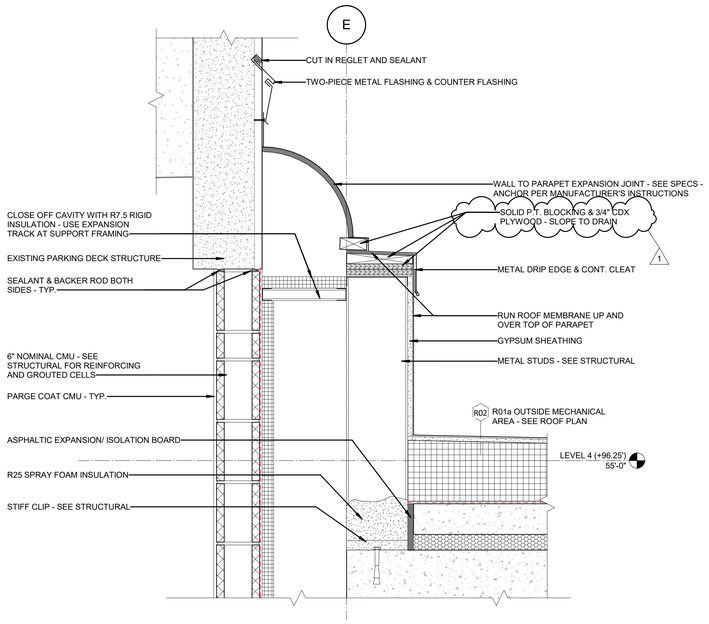

D5 SECT. DTL. - ROOF JOINT AT PD - TYP.

1 1/2" = 1'-0"

C1 SECT. DTL. - TERRACE AT PD WALL

1 1/2" = 1'-0"

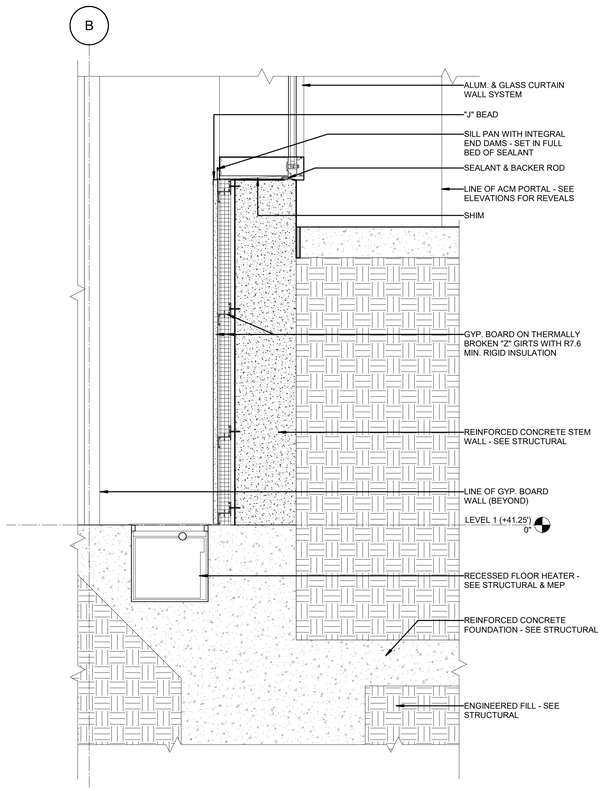

A3 SECT. DTL. - CW FOUNDATION AT PORTAL

1 1/2" = 1'-0"

C5 SECT. DTL. - CW TRIM

1 1/2" = 1'-0"

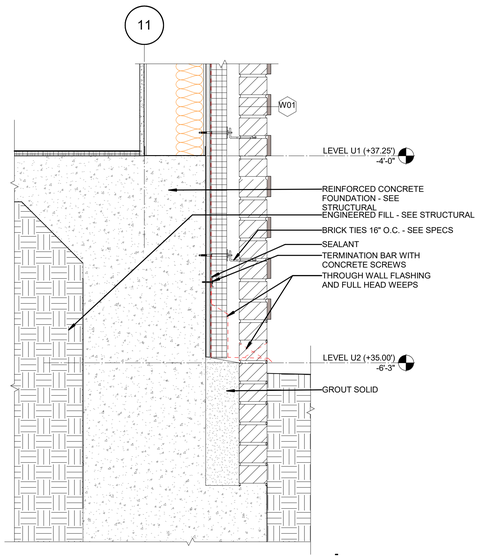

A4 SECT. DTL. - FOUNDATION LIBRARY WEST

1 1/2" = 1'-0"

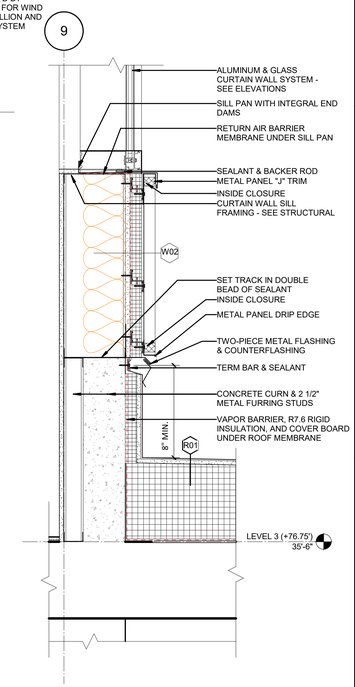

A6 SECT. DTL. - CURB WALL SILL

1 1/2" = 1'-0"

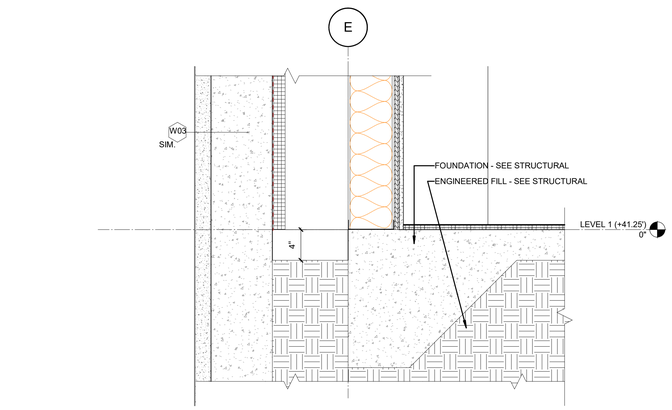

A1 SECT. DTL. - FOUNDATION - MUSEUM AT PD

1 1/2" = 1'-0"

101 NORTH THIRD STREET, SUITE 500
WILMINGTON, NORTH CAROLINA 28401
TEL. 910.790.9901 FAX. 910.790.3111
WWW.LS3P.COM

COPYRIGHT 2023 ALL RIGHTS RESERVED. PRINTED OR ELECTRONIC DRAWINGS AND DOCUMENTATION MAY NOT BE REPRODUCED IN ANY FORM WITHOUT WRITTEN PERMISSION FROM LS3P ASSOCIATES LTD.

Project Grace

Grace Street
Wilmington, NC 28401

LS3P PROJECT: 7701-177600

Δ	DATE	DESCRIPTION
0	2023.05.22	PERMIT SET
1	2023.06.22	ADDENDUM #2

SHEET NAME:
EXTERIOR WALL SECTION DETAILS

ORIG SUBMISSION: 2023.05.22

SHEET:
A-513

PERMIT SET

6/21/2023 4:36:08 PM

THE LINE SHOWN ABOVE IS EXACTLY ONE INCH LONG ON ARCH E1 SHEETS ORIGINAL PLOT SIZE

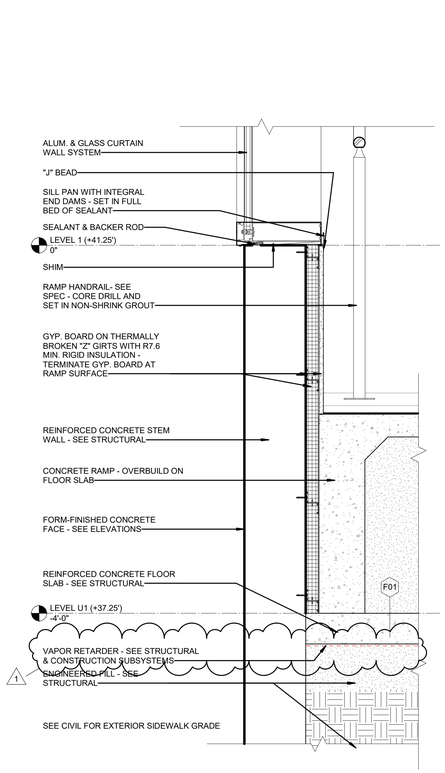

A1 SECT. DTL. - CW SILL AT STEM WALL (LVL U1)

1 1/2" = 1'-0"

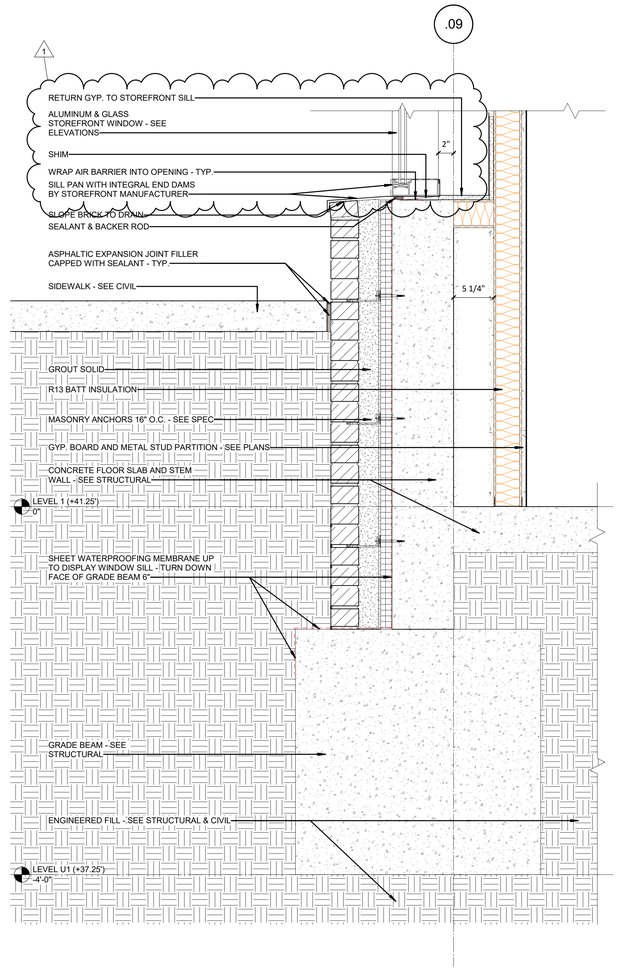

A5 SECT. DTL. - BRICK WINDOW SILL (LVL 1)

1 1/2" = 1'-0"

NEW HANOVER COUNTY • NORTH CAROLINA • ESTABLISHED 1729

CFD Cape Fear Development

LS3P

101 NORTH THIRD STREET, SUITE 500
WILMINGTON, NORTH CAROLINA 28401
TEL. 910.790.9901 FAX. 910.790.3111
WWW.LS3P.COM

LS3P ASSOCIATES LTD. REGISTERED ARCHITECTURAL COMPANY CERT. NO. 50417 NORTH CAROLINA WILMINGTON, NORTH CAROLINA

COPYRIGHT 2023 ALL RIGHTS RESERVED. PRINTED OR ELECTRONIC DRAWINGS AND DOCUMENTATION MAY NOT BE REPRODUCED IN ANY FORM WITHOUT WRITTEN PERMISSION FROM LS3P ASSOCIATES LTD.

Project Grace

Grace Street
Wilmington, NC 28401

LS3P PROJECT: 7701-177600

Δ	DATE	DESCRIPTION
0	2023.05.22	PERMIT SET
1	2023.06.22	ADDENDUM #2

SHEET NAME:
EXTERIOR WALL SECTION DETAILS

ORIG SUBMISSION: 2023.05.22

SHEET:
A-514

PERMIT SET

6/21/2023 4:36:08 PM

E D C B A

1 2 3 4 5 6

ARCH- DOOR SCHEDULE

DOOR		DOOR PANELS						DOOR FRAME					
	FIRE RTG (MIN)	PANEL TYPE		PANEL FINISH	PANEL DIMENSIONS					FACE DIMENSIONS			
					WIDTH								
NUMBER		PANEL 1	PANEL 2		PNL 1	PNL 2	HEIGHT	FRAME TYPE	FRAM FINISH	JAMB WIDTH	HEAD HEIGHT	HARDWARE COMMENTS	PANIC HDWE
S-1D		PNL-F-HM			3'-0"		7'-0"	FRM-00HM1	PAINTED METAL	2"	2"		
01 - Level 1													
C101	90MIN	PNL-F-WD			3'-0"		8'-0"	FRM-00HM1	PAINTED METAL	2"	2"	HARDWARE: TYPICAL LOCKSET, CLOSER	
C102	-	PNL-F-HM	PNL-F-HM		3'-0"	3'-0"	8'-0"	FRM-00HM1	PAINTED METAL	2"	2"	HARDWARE: TYPICAL LOCKSET	
C104	-	PNL-F-HM			3'-0"		8'-0"	FRM-00HM1	PAINTED METAL	2"	2"	HARDWARE: TYPICAL LOCKSET	
C105	45MIN	PNL-F-HM			3'-0"		8'-0"	FRM-00HM1	PAINTED METAL	2"	2"	HARDWARE: TYPICAL LOCKSET, CLOSER	
C106A	45MIN	PNL-F-HM	PNL-F-HM		3'-0"	3'-0"	8'-0"	FRM-00HM1	PAINTED METAL	2"	2"	HARDWARE: TYPICAL LOCKSET, CLOSER	
C106B	45MIN	PNL-F-HM			3'-0"		8'-0"	FRM-00HM1	PAINTED METAL	2"	2"	HARDWARE: TYPICAL LOCKSET, CLOSER	
C107	-	PNL-N-HM	PNL-N-HM		4'-6"	4'-6"	10'-0"	FRM-00HM1	PAINTED METAL	2"	2"	HARDWARE: TYPICAL LOCKSET, EMERGENCY RELEASE MAGNETIC HOLD OPEN	
C108A	45MIN	PNL-F-HM			3'-0"		8'-0"	FRM-00HM1	PAINTED METAL	2"	2"	HARDWARE: PANIC HARDWARE, TYPICAL LOCKSET, CLOSER	Y
C108B	45MIN	PNL-F-HM	PNL-F-HM		3'-0"	3'-0"	8'-0"	FRM-00HM1	PAINTED METAL	2"	2"	HARDWARE: PANIC HARDWARE, TYPICAL LOCKSET, CLOSER	Y
C109	-	PNL-N-HM	PNL-N-HM		4'-6"	4'-6"	10'-0"	FRM-00HM1	PAINTED METAL	2"	2"	HARDWARE: TYPICAL LOCKSET, EMERGENCY RELEASE MAGNETIC HOLD OPEN	
C110A	-	PNL-F1-STL			18'-0"		17'-9"	FRM-60STL	PAINTED METAL	2"	2"	HARDWARE: OVERHEADCOILING DOOR, TYPICAL LOCKSET	
C110B	-	PNL-F-HM			3'-0"		7'-0"	FRM-00HM1	PAINTED METAL	2"	4"	HARDWARE: KEY FOB, CLOSER	
C111A	90MIN	PNL-F-WD			3'-0"		8'-0"	FRM-00HM1	PAINTED METAL	2"	2"	HARDWARE: PANIC HARDWARE, KEY FOB, CLOSER	Y
C111B	-	PNL-F-HM			3'-0"		7'-0"	FRM-00HM1	PAINTED METAL	2"	4"	HARDWARE: PANIC HARDWARE, KEY FOB, CLOSER	Y
C112	-	PNL-F-HM			3'-0"		7'-0"	FRM-00HM1	PAINTED METAL	2"	4"	HARDWARE: CLOSER, TYPICAL LOCKSET	
C113	45MIN	PNL-F-WD			3'-0"		8'-0"	FRM-00HM1	PAINTED METAL	2"	2"	HARDWARE: TYPICAL LOCKSET, CLOSER	
L101A	-	PNL-F-GL	PNL-F-GL		2'-6"	2'-6"	8'-0"	FRM-52HM6(CW)	CLEAR ANODIZED ALUMINUM	0"	2"	HARDWARE: TYPICAL LOCKSET, AUTOMATIC SLIDING, EMERGENCY BREAKAWAY; BATTERY BACKUP	
L101B	-	PNL-F-GL	PNL-F-GL		2'-6"	2'-6"	8'-0"	FRM-52HM6(CW)	CLEAR ANODIZED ALUMINUM	0"	2"	HARDWARE: TYPICAL LOCKSET, AUTOMATIC SLIDING; BATTERY BACKUP	
L106	-	PNL-F-WD			3'-0"		8'-0"	FRM-00HM1	PAINTED METAL	2"	2"	HARDWARE: KEY FOB	
L107	-	PNL-F-WD			3'-0"		8'-0"	FRM-00HM1	PAINTED METAL	2"	2"	HARDWARE: CLOSER, TYPICAL LOCKSET	
L109A	-	PNL-N-HM			3'-6"		8'-0"	FRM-00HM1	PAINTED METAL	2"	2"	HARDWARE: KEY FOB, CLOSER	
L109B	-	PNL-F-WD			3'-6"		8'-0"	FRM-00HM1	PAINTED METAL	2"	2"	HARDWARE: KEY FOB, CLOSER	
L115	-	PNL-NP			4'-0"		8'-0"	FRM-00HM2	PAINTED METAL	2"	2"	HARDWARE: DOOR OPENING	
L116	-	PNL-F-WD			3'-0"		8'-0"	FRM-00HM1	PAINTED METAL	2"	2"	HARDWARE: KEY FOB, CLOSER	
L117	-	PNL-D-HM	PNL-D-HM		3'-0"	3'-0"	8'-0"	FRM-00HM1	PAINTED METAL	2"	2"	HARDWARE: TYPICAL LOCKSET, DUTCH HARDWARE	
L118	-	PNL-F-WD			3'-0"		8'-0"	FRM-00HM1	PAINTED METAL	2"	2"	HARDWARE: CLOSER, TYPICAL LOCKSET	
L119	-	PNL-F-WD			3'-0"		8'-0"	FRM-00HM1	PAINTED METAL	2"	2"	HARDWARE: CLOSER, TYPICAL LOCKSET	
L120	-	PNL-F-WD			3'-0"		8'-0"	FRM-00HM1	PAINTED METAL	2"	2"	HARDWARE: CLOSER, TYPICAL LOCKSET	
L121		PNL-F-WD			3'-0"		8'-0"	FRM-00AL(CW)	CLEAR ANODIZED ALUMINUM	0"	0"	HARDWARE: TYPICAL LOCKSET	
M102	-	PNL-F-WD	PNL-F-WD		3'-0"	3'-0"	8'-0"	FRM-00HM1	PAINTED METAL	2"	2"	HARDWARE: PANIC HARDWARE, TYPICAL LOCKSET, CLOSER, MANUAL DOOR STOP	Y
M103	-	PNL-F-WD	PNL-F-WD		3'-0"	3'-0"	8'-0"	FRM-00HM1	PAINTED METAL	2"	2"	HARDWARE: TYPICAL LOCKSET	
M107	-	PNL-F-WD			3'-0"		8'-0"	FRM-00HM1	PAINTED METAL	2"	2"	HARDWARE: CLOSER, TYPICAL LOCKSET	
M108	-	PNL-F-WD			3'-0"		8'-0"	FRM-00HM1	PAINTED METAL	2"	2"	HARDWARE: CLOSER, TYPICAL LOCKSET	
M109	-	PNL-F-WD			3'-0"		8'-0"	FRM-00HM1	PAINTED METAL	2"	2"	HARDWARE: CLOSER, TYPICAL LOCKSET	
M110	-	PNL-F-WD	PNL-F-WD		3'-0"	3'-0"	8'-0"	FRM-00HM1	PAINTED METAL	2"	2"	HARDWARE: TYPICAL LOCKSET, CLOSER, MANUAL DOOR STOP; SOUND RATED DOOR (STC 50)	
M111	-	PNL-F-WD			3'-0"		8'-0"	FRM-00HM1	PAINTED METAL	2"	2"	HARDWARE: TYPICAL LOCKSET, CLOSER; SOUND RATED DOOR (STC 50)	
M115A	-	PNL-F-HM	PNL-F-HM		4'-6"	4'-6"	10'-0"	FRM-00HM1	PAINTED METAL	2"	2"	HARDWARE: PANIC HARDWARE, KEY FOB, CLOSER; SOUND SEAL PACKAGE, MANUAL DOOR STOP	Y
M115B	90MIN	PNL-F-HM			3'-0"		7'-0"	FRM-00HM1	PAINTED METAL	2"	4"	HARDWARE: PANIC HARDWARE, KEY FOB, CLOSER	Y
S100A	-	PNL-F-WD			3'-6"		8'-0"	FRM-NF	---	0"	0"	HARDWARE: CONCEALED CLOSER, SPECIALTY LOCK; ACM FACED PANEL TO BE FLUSH WITH ADJACENT WALL	
S101A	-	PNL-F-GL	PNL-F-GL		3'-0"	3'-0"	8'-0"	FRM-00AL(CW)	CLEAR ANODIZED ALUMINUM	0"	0"	HARDWARE: PANIC HARDWARE, TYPICAL LOCKSET, CLOSER	Y
S101B	-	PNL-F-GL	PNL-F-GL		3'-0"	3'-0"	8'-0"	FRM-00AL(CW)	CLEAR ANODIZED ALUMINUM	0"	0"	HARDWARE: PANIC HARDWARE, KEY FOB, CLOSER, ADA PUSH BUTTON, AUTO OPERATOR	Y
S101C	-	PNL-F-GL	PNL-F-GL		3'-0"	3'-0"	8'-0"	FRM-00AL(CW)	CLEAR ANODIZED ALUMINUM	0"	0"	HARDWARE: PANIC HARDWARE, TYPICAL LOCKSET, CLOSER	Y
S101D	-	PNL-F-GL	PNL-F-GL		3'-0"	3'-0"	8'-0"	FRM-00AL(CW)	CLEAR ANODIZED ALUMINUM	0"	0"	HARDWARE: PANIC HARDWARE, KEY FOB, CLOSER, ADA PUSH BUTTON, AUTO OPERATOR	Y
S103	-	PNL-F-WD	PNL-F-WD		3'-0"	3'-0"	8'-0"	FRM-00HM1	PAINTED METAL	2"	2"	HARDWARE: PANIC HARDWARE, TYPICAL LOCKSET, CLOSER, MANUAL DOOR STOP	Y
S104	-	PNL-F-WD	PNL-F-WD		3'-0"	3'-0"	8'-0"	FRM-00HM1	PAINTED METAL	2"	2"	HARDWARE: PANIC HARDWARE, TYPICAL LOCKSET, CLOSER, MANUAL DOOR STOP	Y
S105	-	PNL-F-WD			3'-0"		8'-0"	FRM-00HM1	PAINTED METAL	2"	2"	HARDWARE: KEY FOB, CLOSER	
S106A	-	PNL-N-HM			3'-0"		8'-0"	FRM-00HM1	PAINTED METAL	2"	2"	HARDWARE: KEY FOB, CLOSER	
S106B	-	PNL-F-WD			3'-0"		8'-0"	FRM-00HM1	PAINTED METAL	2"	2"	HARDWARE: CLOSER, TYPICAL LOCKSET	
S107	-	PNL-F-WD			3'-0"		8'-0"	FRM-00HM1	PAINTED METAL	2"	2"	HARDWARE: TYPICAL LOCKSET	
S108	-	PNL-F-WD	PNL-F-WD		3'-0"	3'-0"	8'-0"	FRM-00HM1	PAINTED METAL	2"	2"	HARDWARE: TYPICAL LOCKSET	
S109	-	PNL-NP			6'-0"		8'-0"	FRM-00AL2	CLEAR ANODIZED ALUMINUM	2"	2"	HARDWARE: DOOR OPENING	
S110	-	PNL-F-WD			3'-0"		8'-0"	FRM-00HM1	PAINTED METAL	2"	2"	HARDWARE: CLOSER, TYPICAL LOCKSET	
S111	-	PNL-F-WD			3'-0"		8'-0"	FRM-00HM1	PAINTED METAL	2"	2"	HARDWARE: CLOSER, TYPICAL LOCKSET	
S112	-	PNL-F-WD			3'-0"		8'-0"	FRM-00HM1	PAINTED METAL	2"	2"	HARDWARE: CLOSER, TYPICAL LOCKSET	
S-1A	90MIN	PNL-N-WD			3'-0"		8'-0"	FRM-00HM1	PAINTED METAL	2"	2"	HARDWARE: PANIC HARDWARE, CLOSER	Y
S-2A	90MIN	PNL-N-WD			3'-0"		8'-0"	FRM-00HM1	PAINTED METAL	2"	2"	HARDWARE: PANIC HARDWARE, KEY FOB, CLOSER	Y
02 - Level 2													
C201	-	PNL-F-WD	PNL-F-WD		2'-6"	2'-6"	8'-0"	FRM-00HM1	PAINTED METAL	2"	2"	HARDWARE: TYPICAL LOCKSET	
C202	-	PNL-F-WD	PNL-F-WD		3'-2"	3'-2"	8'-0"	FRM-00HM1	PAINTED METAL	2"	2"	HARDWARE: TYPICAL LOCKSET	
C204	-	PNL-F-HM			3'-0"		8'-0"	FRM-00HM1	PAINTED METAL	2"	2"	HARDWARE: TYPICAL LOCKSET	
C205	-	PNL-F-HM			3'-0"		8'-0"	FRM-00HM1	PAINTED METAL	2"	2"	HARDWARE: TYPICAL LOCKSET	
L205A	-	PNL-F-WD			3'-0"		8'-0"	FRM-00AL(CW)	CLEAR ANODIZED ALUMINUM	0"	0"	HARDWARE: CLOSER, TYPICAL LOCKSET, MANUAL DOOR STOP	
L205B	-	PNL-F-WD			3'-0"		8'-0"	FRM-00AL(CW)	CLEAR ANODIZED ALUMINUM	0"	0"	HARDWARE: CLOSER, TYPICAL LOCKSET, MANUAL DOOR STOP	
L206	-	PNL-F-WD	PNL-F-WD		3'-2"	3'-2"	8'-0"	FRM-00HM1	PAINTED METAL	2"	2"	HARDWARE: TYPICAL LOCKSET	
L208		PNL-F-WD			3'-0"		8'-0"	FRM-00HM1	PAINTED METAL	2"	2"	HARDWARE: PANIC HARDWARE, TYPICAL LOCKSET, CLOSER	Y
L209	-	PNL-F-WD			3'-0"		8'-0"	FRM-00AL(CW)	CLEAR ANODIZED ALUMINUM	0"	0"	HARDWARE: CLOSER, TYPICAL LOCKSET, MANUAL DOOR STOP	
L210	-	PNL-F-WD			3'-0"		8'-0"	FRM-00AL(CW)	CLEAR ANODIZED ALUMINUM	0"	0"	HARDWARE: CLOSER, TYPICAL LOCKSET, MANUAL DOOR STOP	
L211A	-	PNL-FG-WD	PNL-FG-WD		3'-0"	3'-0"	8'-0"	FRM-00AL(CW)	CLEAR ANODIZED ALUMINUM	0"	0"	HARDWARE: CLOSER, TYPICAL LOCKSET, MANUAL DOOR STOP	
L211B	-	PNL-F-HM	PNL-F-HM		3'-0"	3'-0"	8'-0"	FRM-00HM1	PAINTED METAL	2"	2"	HARDWARE: KEY FOB, CLOSER	
L212	-	PNL-NP			3'-0"		8'-0"	FRM-00HM2	PAINTED METAL	2"	2"	HARDWARE: DOOR OPENING	
L213	-	PNL-NP			3'-0"		8'-0"	FRM-00HM2	PAINTED METAL	2"	2"	HARDWARE: TYPICAL LOCKSET	
L214	-	PNL-FG-WD			3'-0"		8'-0"	FRM-00HM1	PAINTED METAL	2"	2"	HARDWARE: TYPICAL LOCKSET	
L215	-	PNL-N-HM			3'-0"		8'-0"	FRM-00HM1	PAINTED METAL	2"	2"	HARDWARE: CLOSER, TYPICAL LOCKSET	
L216	-	PNL-F-WD			3'-0"		8'-0"	FRM-00AL(CW)	CLEAR ANODIZED ALUMINUM	0"	0"	HARDWARE: CLOSER, TYPICAL LOCKSET, MANUAL DOOR STOP	
L217	-	PNL-F-WD			3'-0"		8'-0"	FRM-00AL(CW)	CLEAR ANODIZED ALUMINUM	0"	0"	HARDWARE: CLOSER, TYPICAL LOCKSET, MANUAL DOOR STOP	
L218	-	PNL-F-WD			3'-0"		8'-0"	FRM-00AL(CW)	CLEAR ANODIZED ALUMINUM	0"	0"	HARDWARE: CLOSER, TYPICAL LOCKSET, MANUAL DOOR STOP	
L219	-	PNL-F-WD			3'-0"		8'-0"	FRM-00HM1	PAINTED METAL	2"	2"	HARDWARE: KEY FOB, CLOSER	
L220	-	PNL-F-WD			3'-0"		8'-0"	FRM-00HM1	PAINTED METAL	2"	2"	HARDWARE: CLOSER, TYPICAL LOCKSET	
L222	-	PNL-N-WD			3'-6"		8'-0"	FRM-00HM1	PAINTED METAL	2"	2"	HARDWARE: CLOSER, TYPICAL LOCKSET	
L222B	180MIN	PNL-F-HM			3'-0"		6'-8"	FRM-00HM1	PAINTED METAL	2"	2"	HARDWARE: KEY FOB, CLOSER	Y
L223	-	PNL-F-WD			3'-0"		8'-0"	FRM-00HM1	PAINTED METAL	2"	2"	HARDWARE: KEY FOB, CLOSER	
L226	-	PNL-FG-WD			3'-0"		8'-0"	FRM-00HM1	PAINTED METAL	2"	2"	HARDWARE: TYPICAL LOCKSET	
L227A	-	PNL-FG-WD			3'-0"		8'-0"	FRM-00HM1	PAINTED METAL	2"	2"	HARDWARE: TYPICAL LOCKSET	
L227B	-	PNL-N-WD			3'-0"		8'-0"	FRM-00HM1	PAINTED METAL	2"	2"	HARDWARE: CLOSER, KEYFOB; SOUND RATED DOOR (STC 50)	
L228	-	PNL-FG-WD			3'-0"		8'-0"	FRM-00HM1	PAINTED METAL	2"	2"	HARDWARE: TYPICAL LOCKSET	
L229	-	PNL-FG-WD			3'-0"		8'-0"	FRM-00HM1	PAINTED METAL	2"	2"	HARDWARE: TYPICAL LOCKSET	
L230	-	PNL-FG-WD			3'-0"		8'-0"	FRM-00HM1	PAINTED METAL	2"	2"	HARDWARE: TYPICAL LOCKSET	
L231	-	PNL-FG-WD			3'-0"		8'-0"	FRM-00HM1	PAINTED METAL	2"	2"	HARDWARE: TYPICAL LOCKSET	
L232	-	PNL-F-WD			3'-0"		8'-0"	FRM-00HM1	PAINTED METAL	2"	2"	HARDWARE: CLOSER, TYPICAL LOCKSET	
L233	-	PNL-F-WD			3'-0"		8'-0"	FRM-00HM1	PAINTED METAL	2"	2"	HARDWARE: CLOSER, TYPICAL LOCKSET	
L234	-	PNL-F-WD			3'-0"		8'-0"	FRM-00AL(CW)	CLEAR ANODIZED ALUMINUM	0"	0"	HARDWARE: CLOSER, TYPICAL LOCKSET, MANUAL DOOR STOP	
L235A		PNL-F-WD			3'-0"		8'-0"	FRM-00AL(CW)	CLEAR ANODIZED ALUMINUM	0"	0"	HARDWARE: CLOSER, TYPICAL LOCKSET, MANUAL DOOR STOP	
L235B	-	PNL-F-WD			3'-0"		8'-0"	FRM-00AL(CW)	CLEAR ANODIZED ALUMINUM	0"	0"	HARDWARE: CLOSER, TYPICAL LOCKSET, MANUAL DOOR STOP	
M202	-	PNL-F-WD	PNL-F-WD		2'-10"	2'-10"	8'-0"	FRM-00HM1	PAINTED METAL	2"	2"	HARDWARE: CLOSER, EMERGENCY RELEASE MAGNETIC HOLD OPEN	
M203	-	PNL-F-WD			3'-0"		8'-0"	FRM-00HM1	PAINTED METAL	2"	2"	HARDWARE: CLOSER, TYPICAL LOCKSET	
M204	-	PNL-F-WD			3'-0"		8'-0"	FRM-00HM1	PAINTED METAL	2"	2"	HARDWARE: CLOSER, TYPICAL LOCKSET	
M205	-	PNL-F-WD			3'-0"		8'-0"	FRM-00HM1	PAINTED METAL	2"	2"	HARDWARE: CLOSER, TYPICAL LOCKSET	
M206A	-	PNL-F-HM	PNL-F-HM		4'-6"	4'-6"	10'-0"	FRM-00HM1	PAINTED METAL	2"	2"	HARDWARE: KEY FOB, CLOSER, MANUAL DOOR STOP	
M206B	90MIN	PNL-F-HM			3'-0"		7'-0"	FRM-00HM1	PAINTED METAL	2"	4"	HARDWARE: PANIC HARDWARE, KEY FOB, CLOSER	Y
S-1B	90MIN	PNL-N-WD			3'-0"		8'-0"	FRM-00HM1	PAINTED METAL	2"	2"	HARDWARE: PANIC HARDWARE, KEY FOB, CLOSER	
S-2B	90MIN	PNL-N-WD			3'-0"		8'-0"	FRM-00HM1	PAINTED METAL	2"	2"	HARDWARE: PANIC HARDWARE, KEY FOB, CLOSER	Y

ARCH- DOOR SCHEDULE

DOOR		DOOR PANELS						DOOR FRAME					
	FIRE RTG (MIN)	PANEL TYPE		PANEL FINISH	PANEL DIMENSIONS					FACE DIMENSIONS			
					WIDTH								
NUMBER		PANEL 1	PANEL 2		PNL 1	PNL 2	HEIGHT	FRAME TYPE	FRAM FINISH	JAMB WIDTH	HEAD HEIGHT	HARDWARE COMMENTS	PANIC HDWE
03 - Level 3													
C302	-	PNL-F-HM			3'-0"		8'-0"	FRM-00HM1	PAINTED METAL	2"	2"	HARDWARE: TYPICAL LOCKSET	
C303	90MIN	PNL-F-HM			3'-0"		8'-0"	FRM-00HM1	PAINTED METAL	2"	2"	HARDWARE: TYPICAL LOCKSET, CLOSER	
C304	-	PNL-F-HM			3'-0"		8'-0"	FRM-00HM1	PAINTED METAL	2"	2"	HARDWARE: TYPICAL LOCKSET	
C305	-	PNL-F-HM			3'-0"		8'-0"	FRM-00HM1	PAINTED METAL	2"	2"	HARDWARE: TYPICAL LOCKSET	
C306	-	PNL-F-HM			3'-0"		8'-0"	FRM-00HM1	PAINTED METAL	2"	2"	HARDWARE: TYPICAL LOCKSET	
M302	-	PNL-F-WD	PNL-F-WD		2'-10"	2'-10"	8'-0"	FRM-00HM1	PAINTED METAL	2"	2"	HARDWARE: CLOSER, EMERGENCY RELEASE MAGNETIC HOLD OPEN	
M303	-	PNL-F-WD			3'-0"		8'-0"	FRM-00HM1	PAINTED METAL	2"	2"	HARDWARE: CLOSER, TYPICAL LOCKSET	
M304	-	PNL-F-WD			3'-0"		8'-0"	FRM-00HM1	PAINTED METAL	2"	2"	HARDWARE: CLOSER, TYPICAL LOCKSET	
M305	-	PNL-F-WD			3'-0"		8'-0"	FRM-00HM1	PAINTED METAL	2"	2"	HARDWARE: CLOSER, TYPICAL LOCKSET	
M306	-	PNL-F-WD			4'-0"		8'-0"	FRM-00HM1	PAINTED METAL	2"	2"	HARDWARE: TYPICAL LOCKSET	
M307A	-	PNL-F-HM			3'-0"		8'-0"	FRM-00HM1	PAINTED METAL	2"	2"	HARDWARE: PANIC HARDWARE, TYPICAL LOCKSET, CLOSER	Y
M307B		PNL-F-HM			3'-0"		8'-0"	FRM-00HM1	PAINTED METAL	2"	2"	HARDWARE: PANIC HARDWARE, KEY FOB, CLOSER	Y
M307C	-	PNL-F-HM	PNL-F-HM		4'-6"	4'-6"	10'-0"	FRM-00HM1	PAINTED METAL	2"	2"	HARDWARE: KEY FOB, CLOSER, MANUAL DOOR STOP	
M309A	-	PNL-F-WD	PNL-F-WD		3'-0"	3'-0"	8'-0"	FRM-00HM1	PAINTED METAL	2"	2"	HARDWARE: PANIC HARDWARE, TYPICAL LOCKSET, CLOSER, MANUAL DOOR STOP	Y
M309B	-	PNL-F-HM	PNL-F-HM		5'-0"	5'-0"	10'-0"	FRM-52HM6	PAINTED METAL	2"	2"	HARDWARE: BARNDOOR	
M310A	-	PNL-F-WD	PNL-F-WD		3'-0"	3'-0"	8'-0"	FRM-00HM1	PAINTED METAL	2"	2"	HARDWARE: PANIC HARDWARE, TYPICAL LOCKSET, CLOSER, MANUAL DOOR STOP	Y
M310B	-	PNL-F-HM	PNL-F-HM		5'-0"	5'-0"	10'-0"	FRM-52HM6	PAINTED METAL	2"	2"	HARDWARE: BARNDOOR	
M311A	-	PNL-F-WD	PNL-F-WD		3'-0"	3'-0"	8'-0"	FRM-00HM1	PAINTED METAL	2"	2"	HARDWARE: PANIC HARDWARE, TYPICAL LOCKSET, CLOSER, MANUAL DOOR STOP	Y
M311B	-	PNL-F-HM	PNL-F-HM		5'-0"	5'-0"	10'-0"	FRM-52HM6	PAINTED METAL	2"	2"	HARDWARE: BARNDOOR	
M311B	-	PNL-F-HM			3'-0"		8'-0"	FRM-00HM1	PAINTED METAL	2"	2"	HARDWARE: KEY FOB, CLOSER	
M311D	-	PNL-F-HM			3'-0"		8'-0"	FRM-00HM1	PAINTED METAL	2"	2"	HARDWARE: PANIC HARDWARE, KEY FOB, CLOSER	Y
M312A	-	PNL-F-WD			3'-0"		8'-0"	FRM-00HM1	PAINTED METAL	2"	2"	HARDWARE: CLOSER, TYPICAL LOCKSET, MANUAL DOOR STOP	
M312B	-	PNL-FG-AL			3'-0"		8'-0"	FRM-00AL(CW)	CLEAR ANODIZED ALUMINUM	0"	0"	HARDWARE: CLOSER, TYPICAL LOCKSET	
M314A	-	PNL-F-WD			3'-0"		8'-0"	FRM-00HM1	PAINTED METAL	2"	2"	HARDWARE: CLOSER, TYPICAL LOCKSET, MANUAL DOOR STOP	
M314B	-	PNL-FG-AL			3'-0"		8'-0"	FRM-00AL(CW)	CLEAR ANODIZED ALUMINUM	0"	0"	HARDWARE: CLOSER, TYPICAL LOCKSET	
M315A	-	PNL-N-WD			3'-0"		8'-0"	FRM-00HM1	PAINTED METAL	2"	2"	HARDWARE: CLOSER, TYPICAL LOCKSET	
M315B	-	PNL-F-WD			3'-0"		8'-0"	FRM-00HM1	PAINTED METAL	2"	2"	HARDWARE: CLOSER, TYPICAL LOCKSET	
M316A	-	PNL-F-WD			3'-0"		8'-0"	FRM-00HM1	PAINTED METAL	2"	2"	HARDWARE: TYPICAL LOCKSET	
M316B	-	PNL-N-WD			3'-0"		8'-0"	FRM-00HM1	PAINTED METAL	2"	2"	HARDWARE: CLOSER, TYPICAL LOCKSET	
M317	-	PNL-F-WD			3'-0"		8'-0"	FRM-00HM1	PAINTED METAL	2"	2"	HARDWARE: KEY FOB, CLOSER	
M319	-	PNL-FG-WD			3'-0"		7'-0"	FRM-00HM1	PAINTED METAL	2"	2"	HARDWARE: TYPICAL LOCKSET	
M320	-	PNL-FG-WD			3'-0"		7'-0"	FRM-00HM1	PAINTED METAL	2"	2"	HARDWARE: TYPICAL LOCKSET	
M321	-	PNL-FG-WD			3'-0"		7'-0"	FRM-00HM1	PAINTED METAL	2"	2"	HARDWARE: TYPICAL LOCKSET	
M322	-	PNL-FG-WD			3'-0"		7'-0"	FRM-00HM1	PAINTED METAL	2"	2"	HARDWARE: TYPICAL LOCKSET	
M323	-	PNL-FG-WD			3'-0"		7'-0"	FRM-00HM1	PAINTED METAL	2"	2"	HARDWARE: TYPICAL LOCKSET	
M324	-	PNL-FG-WD			3'-0"		7'-0"	FRM-00HM1	PAINTED METAL	2"	2"	HARDWARE: TYPICAL LOCKSET	
M325	-	PNL-F-WD			3'-0"		8'-0"	FRM-00HM1	PAINTED METAL	2"	2"	HARDWARE: CLOSER, TYPICAL LOCKSET	
M326	-	PNL-FG-WD			3'-0"		8'-0"	FRM-00HM1	PAINTED METAL	2"	2"	HARDWARE: TYPICAL LOCKSET, MANUAL DOOR STOP	
M327	-	PNL-F-WD	PNL-F-WD		3'-0"	3'-0"	8'-0"	FRM-01HM4	PAINTED METAL	2"	2"	HARDWARE: PANIC HARDWARE, KEY FOB, CLOSER	Y
M328	-	PNL-N-HM	PNL-N-HM		3'-0"	3'-0"	8'-0"	FRM-00HM1	PAINTED METAL	2"	2"	HARDWARE: TYPICAL LOCKSET	
M329	-	PNL-F-HM			3'-0"		8'-0"	FRM-00HM1	PAINTED METAL	2"	2"	HARDWARE: TYPICAL LOCKSET	
M330	-	PNL-F-HM	PNL-F-HM		3'-0"	3'-0"	8'-0"	FRM-00HM1	PAINTED METAL	2"	2"	HARDWARE: TYPICAL LOCKSET	
M331	-	PNL-F-HM			3'-0"		8'-0"	FRM-00HM1	PAINTED METAL	2"	2"	HARDWARE: TYPICAL LOCKSET	
M332A	-	PNL-FG-AL	PNL-FG-AL		3'-0"	3'-0"	8'-0"	FRM-00AL(CW)	CLEAR ANODIZED ALUMINUM	0"	0"	HARDWARE: PANIC HARDWARE, CLOSER, ADA PUSH BUTTON, AUTO OPERATOR	Y
M332B	-	PNL-FG-AL	PNL-FG-AL		3'-0"	3'-0"	8'-0"	FRM-00AL(CW)	CLEAR ANODIZED ALUMINUM	0"	0"	HARDWARE: PANIC HARDWARE, TYPICAL LOCKSET, CLOSER, ADA PUSH BUTTON, AUTO OPERATOR	Y
S-1C	90MIN	PNL-F-HM			3'-0"		8'-0"	FRM-00HM1	PAINTED METAL	2"	2"	HARDWARE: PANIC HARDWARE, KEY FOB, CLOSER	Y
S-2C	90MIN	PNL-N-WD			3'-0"		8'-0"	FRM-00HM1	PAINTED METAL	2"	2"	HARDWARE: PANIC HARDWARE, KEY FOB, CLOSER	Y
04 - Level 1 - Deck													
D101	45MIN	PNL-F-HM	PNL-F-HM		2'-10"	2'-10"	7'-0"	FRM-00HM1	PAINTED METAL	2"	4"	HARDWARE: TYPICAL LOCKSET, CLOSER	
05 - Deck Tower													
S-3A	90MIN	PNL-N-HM			3'-0"		7'-0"	FRM-00HM1	PAINTED METAL	2"	2"	HARDWARE: PANIC HARDWARE, CLOSER, EMERGENCY RELEASE MAGNETIC HOLD OPEN	Y
S-3B	90MIN	PNL-N-HM			3'-0"		7'-0"	FRM-00HM1	PAINTED METAL	2"	2"	HARDWARE: PANIC HARDWARE, CLOSER, EMERGENCY RELEASE MAGNETIC HOLD OPEN	Y
S-3C	90MIN	PNL-N-HM			3'-0"		7'-0"	FRM-00HM1	PAINTED METAL	2"	2"	HARDWARE: PANIC HARDWARE, CLOSER, EMERGENCY RELEASE MAGNETIC HOLD OPEN	Y
S-3D	90MIN	PNL-N-HM			3'-0"		7'-0"	FRM-00HM1	PAINTED METAL	2"	2"	HARDWARE: PANIC HARDWARE, CLOSER, EMERGENCY RELEASE MAGNETIC HOLD OPEN	Y
S-3E	90MIN	PNL-N-HM			3'-0"		7'-0"	FRM-00HM1	PAINTED METAL	2"	2"	HARDWARE: PANIC HARDWARE, CLOSER, EMERGENCY RELEASE MAGNETIC HOLD OPEN	Y

1

THE LINE SHOWN ABOVE IS EXACTLY ONE INCH LONG AT THIS SHEETS ORIGINAL PAGE SIZE

CFD Cape Fear Development

LS3P

101 NORTH THIRD STREET, SUITE 500
WILMINGTON, NORTH CAROLINA 28401
TEL. 910.790.9901 FAX. 910.790.3111
WWW.LS3P.COM

LS3P ASSOCIATES LTD. REGISTERED ARCHITECTURAL COMPANY CERT. NO. 50417 NORTH CAROLINA WILMINGTON, NORTH CAROLINA

COPYRIGHT 2023 ALL RIGHTS RESERVED. PRINTED OR ELECTRONIC DRAWINGS AND DOCUMENTATION MAY NOT BE REPRODUCED IN ANY FORM WITHOUT WRITTEN PERMISSION FROM LS3P ASSOCIATES LTD.

Project Grace

Grace Street
Wilmington, NC 28401

LS3P PROJECT: 7701-177600

Δ	DATE	DESCRIPTION
0	2023.05.22	PERMIT SET
1	2023.06.22	ADDENDUM #2

SHEET NAME:
DOOR SCHEDULES

ORIG SUBMISSION: 2023.05.22

SHEET: **A-601**

PERMIT SET

6/21/2023 4:36:12 PM

DocuSign Envelope ID: 4EF13051-DF60-4A58-9465-ABF420F603C0

THE LINE SHOWN ABOVE IS EXACTLY ONE INCH LONG ON ARCH E1 SHEETS ORIGINAL PAGE SIZE

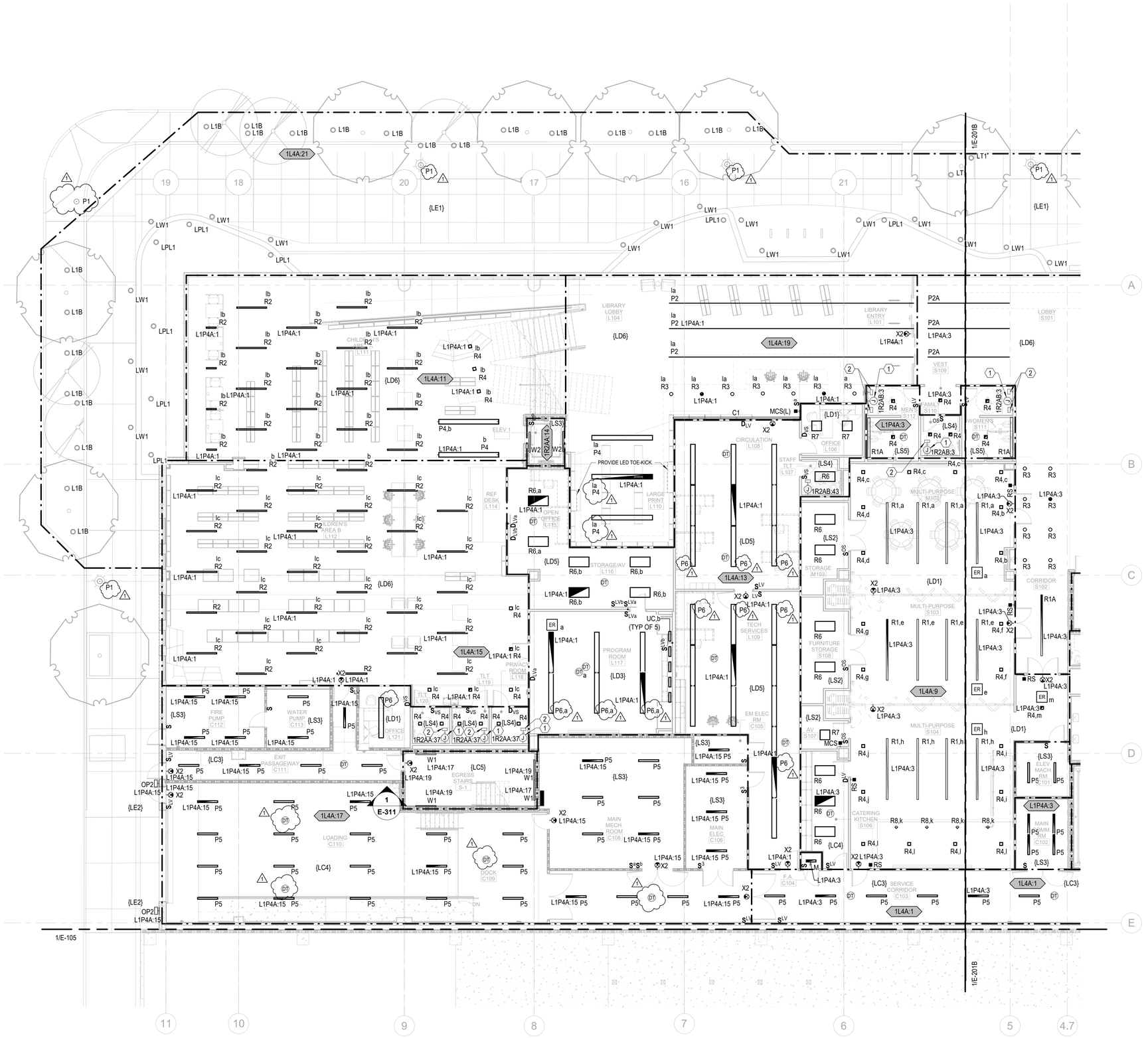

1 ELECTRICAL LIGHTING LEVEL 1 - AREA A

1/8" = 1'-0"

KEYED NOTES

1. TYPICAL JUNCTION BOX FOR BACK LIT MIRROR TO BE CONTROLLED VIA LOW VOLTAGE CONTROLS WITHIN DESIGNATED SPACE.
2. TYP. DECORATIVE SCONCE MOUNTED ABOVE MIRROR, 277V, CONTROLLED VIA LOW VOLTAGE CONTROLS WITHIN DESIGNATED RESTROOMS.

GENERAL NOTES

1. SEE DRAWING E-501 FOR LUMINAIRE SCHEDULE AND E-502 FOR ELECTRICAL LIGHTING CONTROL SEQUENCE OF OPERATIONS.
2. ALL EXIT SIGNS ARE TYPE 'X' UNLESS OTHERWISE NOTED. ALL EXIT SIGNS SHALL BE ON UNSWITCHED LEG OF CIRCUIT.
3. FIXTURES INDICATED FOR EMERGENCY AND EXIT SIGNS SHALL BE DESIGNATED TO PANELBOARD "L1P4A" IN BOUNDARY. NON EMERGENCY FIXTURES SHALL BE DESIGNATED TO PANELBOARD L1P4 IN BOUNDARY.
4. LIGHT FIXTURE 'LP1' & 'LST1' SHALL BE CONNECTED TO CITY STREET LIGHT POWER GRID, COORDINATE REQUIREMENTS WITH UTILITY (DUKE ENERGY).

NEW HANOVER COUNTY • NORTH CAROLINA • ESTABLISHED 1729

CFD Cape Fear Development

LS3P

101 NORTH THIRD STREET, SUITE 500
WILMINGTON, NORTH CAROLINA 28401
TEL. 910.790.3111 FAX. 910.790.9901
WWW.LS3P.COM

NEWCOMB & BOYD NB

5425 Page Road
Suite 215
Durham, NC 27703
T 919 783-7812
NB Contact: Brandon R. Nevin
N&B PROJECT: 21N185
Newcomb & Boyd, LLP
Firm Lic. # F-0312

NORTH CAROLINA PROFESSIONAL ENGINEER SEAL 043458 ENGINEER JUSTIN L. ZIEGLER

Signed on 06/21/2023
using a Digital Signature.

COPYRIGHT 2023 ALL RIGHTS RESERVED. PRINTED OR ELECTRONIC DRAWINGS AND DOCUMENTATION MAY NOT BE REPRODUCED IN ANY FORM WITHOUT WRITTEN PERMISSION FROM LS3P ASSOCIATES LTD.

Project Grace

Grace Street
Wilmington, NC 28401

LS3P PROJECT: 7701-177600

Δ	DATE	DESCRIPTION
0	2023.05.22	PERMIT SET
1	2023.06.22	Addendum #2

SHEET NAME:
ELECTRICAL LIGHTING LEVEL 1 - AREA A

ORIG SUBMISSION: 2023.05.22

SHEET:
E-201A

PERMIT SET

6/21/2023 4:31:13 PM

DocuSign Envelope ID: 4EF13051-DF60-4A58-9465-ABF420F603C0

THE LINE SHOWN ABOVE IS EXACTLY ONE INCH LONG ON ARCH E SHEETS ORIGINAL PLOT SIZE

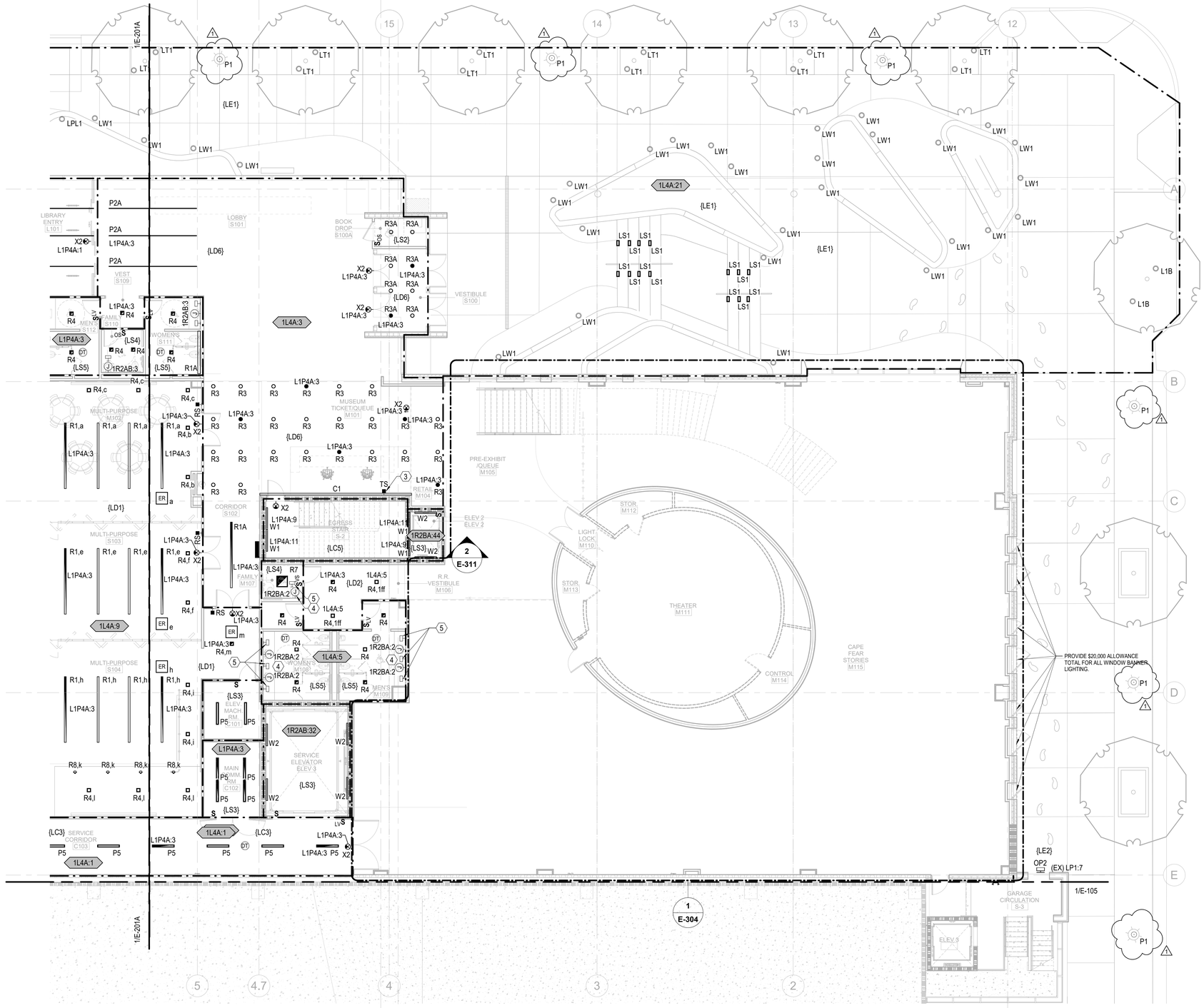

KEYED NOTES

1. ELECTRICAL CONNECTION FOR FUTURE TRACK LIGHTING. INSTALL 13'-6" AFF.

   NOTE: CURRENT LIMITING FEED FOR TRACK SYSTEM REQUIRED FOR NEC COMPLIANCE. DESIGN INTENDED FOR MAXIMUM 277/1P 12A CURRENT TRACK LIMITER PER CIRCUIT.

2. TRACK ELECTRICAL CIRCUIT SEPERATION POINT. TRACK SHALL BE CONTINOUS, FIXTURE SEPERATION SHALL BE PROVIDED BY USE OF JOINER COMPONENTS. FIXTURE TYPE AND ZONE INDICATED ON EACH SIDE OF THE SEPERATION POINT SHALL BE THE SAME THROUGH OUT THE ZONE UNLESS OTHERWISE NOTED.

3. LIGHTING CONTROL PANEL TOUCHSCREEN. COORDINATE FINAL LOCATION WITH ARCHITECT.

4. TYPICAL JUNCTION BOX FOR BACK LIT MIRROR TO BE CONTROLLED VIA LOW VOLTAGE CONTROLS WITHIN DESIGNATED SPACE.

5. TYP. DECORATIVE SCONCE MOUNTED ABOVE MIRROR, 277V, CONTROLLED VIA LOW VOLTAGE CONTROLS WITHIN DESIGNATED RESTROOMS.

GENERAL NOTES

1. SEE DRAWING E-501 FOR LUMINAIRE SCHEDULE AND E-502 FOR ELECTRICAL LIGHTING CONTROL SEQUENCE OF OPERATIONS.

2. ALL EXIT SIGNS ARE TYPE 'X' UNLESS OTHERWISE NOTED. ALL EXIT SIGNS SHALL BE ON UNSWITCHED LEG OF CIRCUIT.

3. LIGHT FIXTURE 'LP1' SHALL BE CONNECTED TO CITY STREET LIGHT POWER GRID, COORDINATE REQUIREMENTS WITH UTILITY (DUKE ENERGY).

1 ELECTRICAL LIGHTING LEVEL 1 - AREA B

1/8" = 1'-0"

NEW HANOVER COUNTY • NORTH CAROLINA • ESTABLISHED 1729

CFD Cape Fear Development

LS3P

101 NORTH THIRD STREET, SUITE 500
WILMINGTON, NORTH CAROLINA 28401
TEL. 910.790.3111 FAX. 910.790.9901
WWW.LS3P.COM

NEWCOMB & BOYD NB

5425 Page Road
Suite 215
Durham, NC 27703
T 919 783-7812
NB Contact: Brandon R. Nevin
N&B PROJECT: 21N185
Newcomb & Boyd, LLP
Firm Lic. # F-0312

NORTH CAROLINA PROFESSIONAL SEAL 043458 ENGINEER JUSTIN L. ZIEGLER

Signed on 06/21/2023
using a Digital Signature.

COPYRIGHT 2023 ALL RIGHTS RESERVED. PRINTED OR ELECTRONIC DRAWINGS AND DOCUMENTATION MAY NOT BE REPRODUCED IN ANY FORM WITHOUT WRITTEN PERMISSION FROM LS3P ASSOCIATES LTD.

Project Grace

Grace Street
Wilmington, NC 28401

LS3P PROJECT: 7701-177600

Δ	DATE	DESCRIPTION
0	2023.05.22	PERMIT SET
1	2023.06.22	Addendum #2

SHEET NAME:
ELECTRICAL LIGHTING LEVEL 1 - AREA B

ORIG SUBMISSION: 2023.05.22

SHEET:
E-201B

PERMIT SET

6/21/2023 4:31:20 PM

DocuSign Envelope ID: 4EF13051-DF60-4A58-9465-A8F420F603C0

THE LINE SHOWN ABOVE IS EXACTLY ONE INCH LONG ON THIS SHEETS ORIGINAL PAGE SIZE

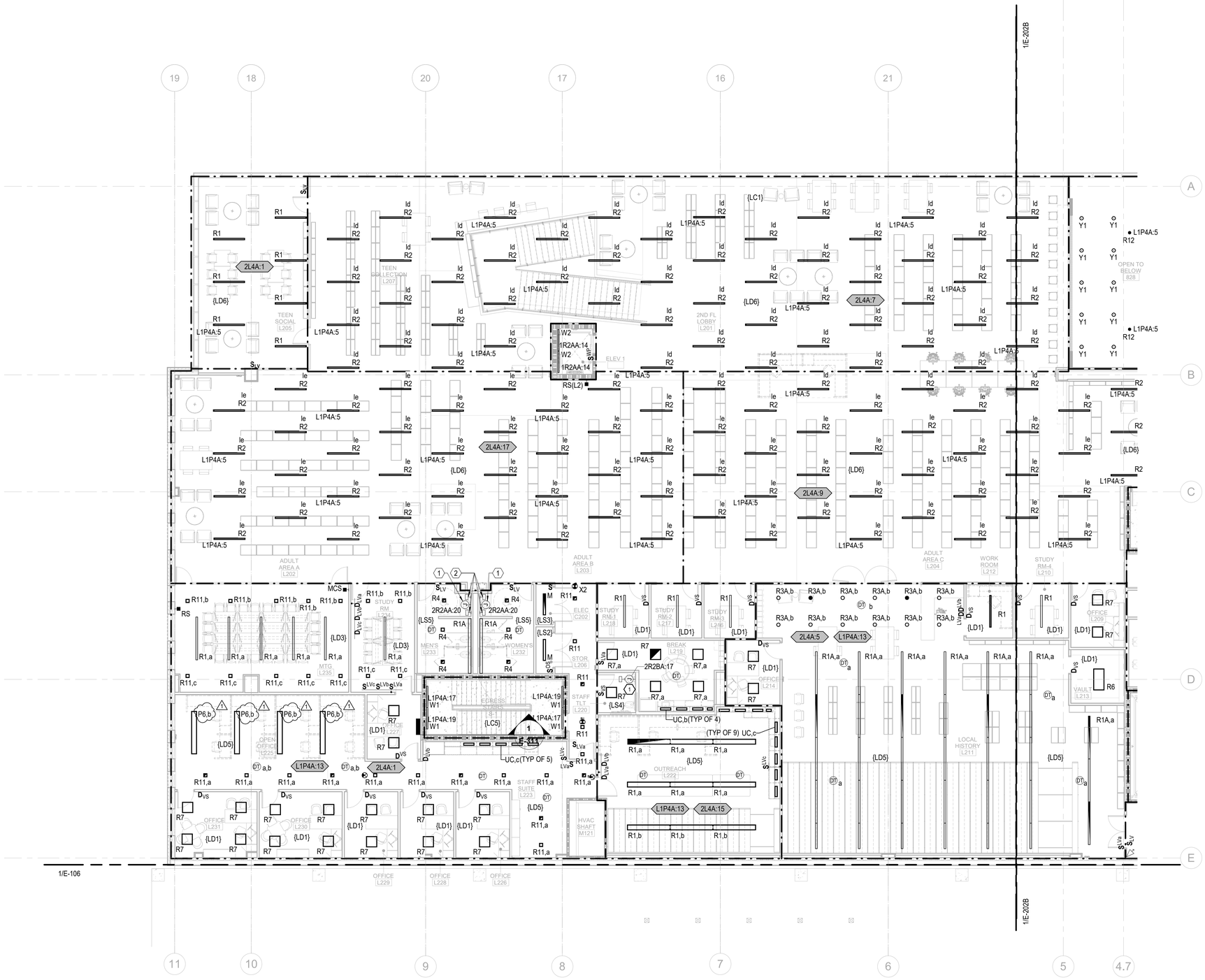

1 ELECTRICAL LIGHTING LEVEL 2 - AREA A

1/8" = 1'-0"

KEYED NOTES

1. TYPICAL JUNCTION BOX FOR BACK LIT MIRROR TO BE CONTROLLED VIA LOW VOLTAGE CONTROLS WITHIN DESIGNATED SPACE.
2. TYP. DECORATIVE SCONCE MOUNTED ABOVE MIRROR, 277V, CONTROLLED VIA LOW VOLTAGE CONTROLS WITHIN DESIGNATED RESTROOMS.

GENERAL NOTES

1. SEE DRAWING E-501 FOR LUMINAIRE SCHEDULE AND E-502 FOR ELECTRICAL LIGHTING CONTROL SEQUENCE OF OPERATIONS.
2. ALL EXIT SIGNS ARE TYPE 'X' UNLESS OTHERWISE NOTED. ALL EXIT SIGNS SHALL BE ON UNSWITCHED LEG OF CIRCUIT.
3. FIXTURES INDICATED FOR EMERGENCY AND EXIT SIGNS SHALL BE DESIGNATED TO PANELBOARD "L1P4A" IN BOUNDARY, NON EMERGENCY FIXTURES SHALL BE DESIGNATED TO PANELBOARD L1P4 IN BOUNDARY.

NEW HANOVER COUNTY • NORTH CAROLINA • ESTABLISHED 1729

CFD Cape Fear Development

LS3P

101 NORTH THIRD STREET, SUITE 500
WILMINGTON, NORTH CAROLINA 28401
TEL. 910.790.3111 FAX. 910.790.9901
WWW.LS3P.COM

NEWCOMB & BOYD NB

5425 Page Road
Suite 215
Durham, NC 27703
T 919 783-7812
NB Contact: Brandon R. Nevin
N&B PROJECT: 21N185
Newcomb & Boyd, LLP
Firm Lic. # F-0312

NORTH CAROLINA PROFESSIONAL ENGINEER SEAL 043458 JUSTIN L. ZIEGLER

Signed on 06/21/2023 using a Digital Signature.

COPYRIGHT 2023 ALL RIGHTS RESERVED. PRINTED OR ELECTRONIC DRAWINGS AND DOCUMENTATION MAY NOT BE REPRODUCED IN ANY FORM WITHOUT WRITTEN PERMISSION FROM LS3P ASSOCIATES LTD.

Project Grace

Grace Street
Wilmington, NC 28401

LS3P PROJECT: 7701-177600

Δ	DATE	DESCRIPTION
0	2023.05.22	PERMIT SET
1	2023.06.22	Addendum #2

SHEET NAME:
ELECTRICAL LIGHTING LEVEL 2 - AREA A

ORIG SUBMISSION: 2023.05.22

SHEET:
E-202A

PERMIT SET

6/21/2023 4:31:33 PM

DocuSign Envelope ID: 4EF13051-DF60-4A58-9465-A8F420F603C0

THE LINE SHOWN ABOVE IS EXACTLY ONE INCH LONG ON ARCH E SHEETS ORIGINAL PLOT SIZE

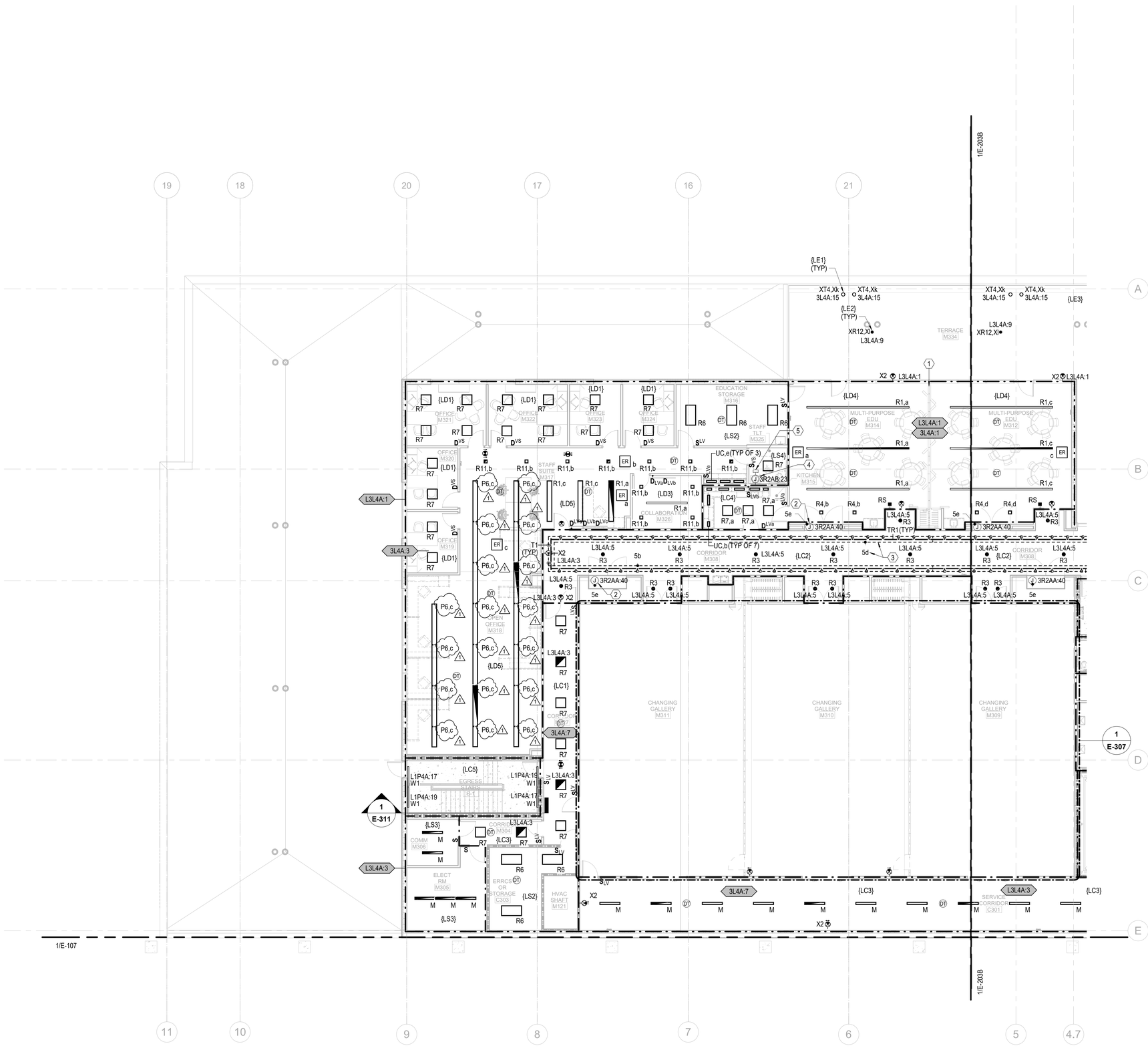

1 ELECTRICAL LIGHTING LEVEL 3 - AREA A

1/8" = 1'-0"

KEYED NOTES

1. PROVIDE PARTITION CONTROL SENSOR. SEE DRAWING E-502 FOR ADDITIONAL LIGHTING CONTROL SYSTEM INFORMATION.
2. MAKE FINAL CONNECTION TO DISPLAY CASE LIGHTING PER MANUFACTURER'S REQUIREMENTS AND COORDINATE LOCATION OF LUMINAIRES WITHIN DISPLAY CASE WILL DISPLAY CASE MANUFACTURER. DISPLAY CASE LIGHTING SHALL BE CONTROLLED VIA LCP3B.
3. DASH AREA INDICATES PORTION OF TRACK LIGHTING TO BE ON INDICATED CONTROL ZONE (EX. '1a') AND CONTROLLED VIA RELAY IN LIGHTING CONTROL PANEL.
4. TYPICAL JUNCTION BOX FOR BACK LIT MIRROW TO BE CONTROLLED VIA LOW VOLTAGE CONTROLS WITHIN DESIGNATED SPACE.
5. TYP. DECORATIVE SCONCE MOUNTED ABOVE MIRROR, 277V, CONTROLLED VIA LOW VOLTAGE CONTROLS WITHIN DESIGNATED RESTROOMS.

GENERAL NOTES

1. SEE DRAWING E-501 FOR LUMINAIRE SCHEDULE AND E-502 FOR ELECTRICAL LIGHTING CONTROL SEQUENCE OF OPERATIONS.
2. ALL EXIT SIGNS ARE TYPE 'X' UNLESS OTHERWISE NOTED. ALL EXIT SIGNS SHALL BE ON UNSWITCHED LEG OF CIRCUIT.
3. FIXTURES INDICATED FOR EMERGENCY AND EXIT SIGNS SHALL BE DESIGNATED TO PANELBOARD "L3L4A" IN BOUNDARY.
4. TRACK LIGHTING SHALL BE CONTINUOUS AND CIRCUIT SEPARATION SHALL BE PROVIDED VIA USE OF JOINER COMPONENTS. CIRCUIT SEPARATION LOCATIONS SHALL BE BASED ON THE CIRCUITING AND ZONES INDICATED ON THE LIGHTING PLAN.
5. TRACK SHALL BE INSTALLED ON UNISTRUT CONSTRUCTED OF 10' GRID WITH A WEIGHT CAPACITY OF 400 LBS PER 10' SECTION.

NEW HANOVER COUNTY • NORTH CAROLINA • ESTABLISHED 1729

CFD Cape Fear Development

LS3P

101 NORTH THIRD STREET, SUITE 500
WILMINGTON, NORTH CAROLINA 28401
TEL. 910.790.3111 FAX. 910.790.9901
WWW.LS3P.COM

NEWCOMB & BOYD NB

5425 Page Road
Suite 215
Durham, NC 27703
T 919 783-7812
NB Contact: Brandon R. Nevin
N&B PROJECT: 21N185
Newcomb & Boyd, LLP
Firm Lic. # F-0312

NORTH CAROLINA PROFESSIONAL ENGINEER SEAL 043458 JUSTIN L. ZIEGLER

Signed on 06/21/2023 using a Digital Signature.

COPYRIGHT 2023 ALL RIGHTS RESERVED. PRINTED OR ELECTRONIC DRAWINGS AND DOCUMENTATION MAY NOT BE REPRODUCED IN ANY FORM WITHOUT WRITTEN PERMISSION FROM LS3P ASSOCIATES LTD.

Project Grace

Grace Street
Wilmington, NC 28401

LS3P PROJECT: 7701-177600

Δ	DATE	DESCRIPTION
0	2023.05.22	PERMIT SET
1	2023.06.22	Addendum #2

SHEET NAME: ELECTRICAL LIGHTING LEVEL 3 - AREA A

ORIG SUBMISSION: 2023.05.22

SHEET: **E-203A**

PERMIT SET

6/21/2023 4:31:41 PM

DocuSign Envelope ID: 4EF13051-DF60-4A58-9465-A8F420F603C0

THE LINE SHOWN ABOVE IS EXACTLY ONE INCH LONG ON ARCH D SHEETS ORIGINAL PAPER SIZE

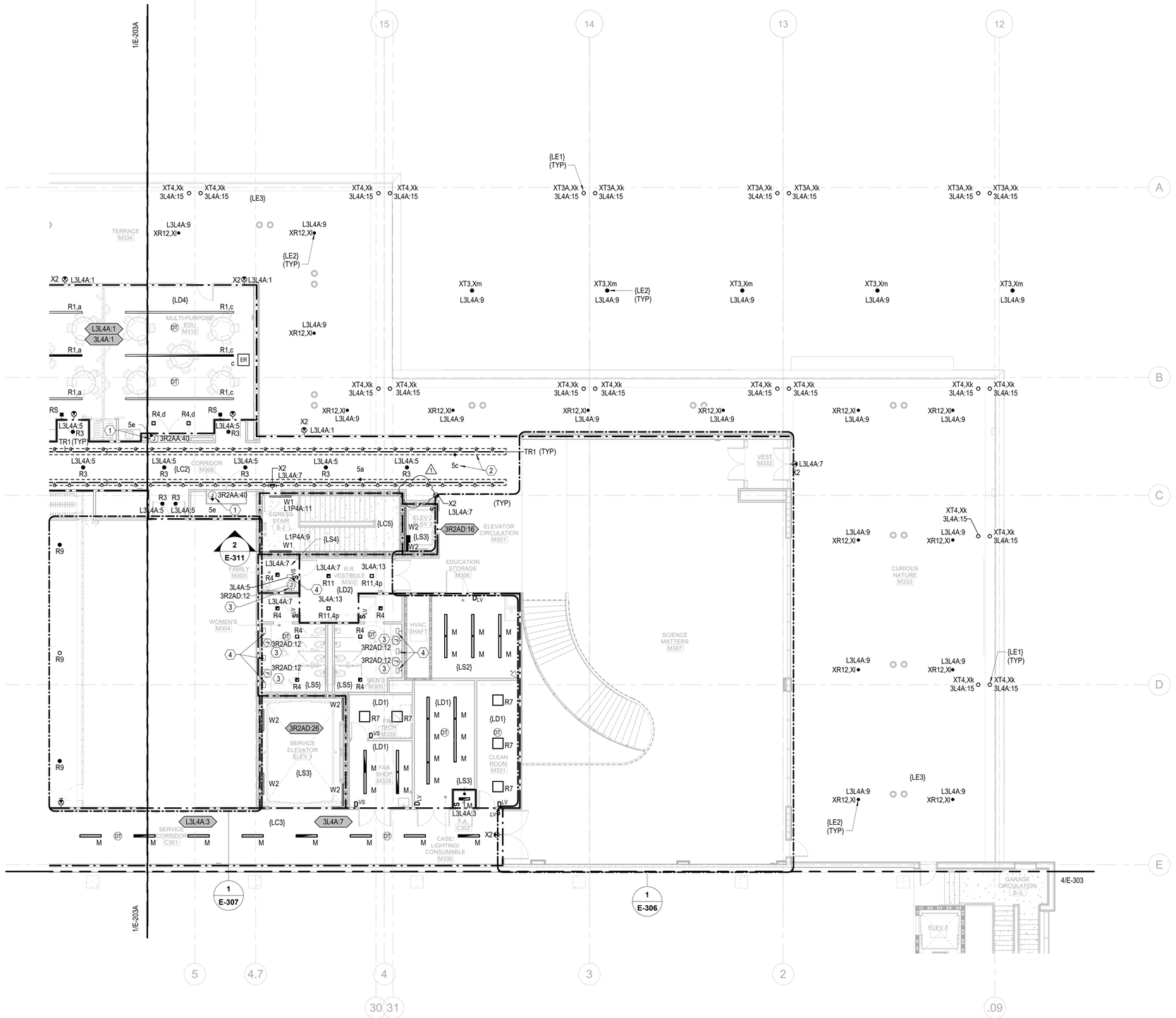

1 ELECTRICAL LIGHTING LEVEL 3 - AREA B

1/8" = 1'-0"

KEYED NOTES

1. MAKE FINAL CONNECTION TO DISPLAY CASE LIGHTING PER MANUFACTURER'S REQUIREMENTS AND COORDINATE LOCATION OF LUMINAIRES WITHIN DISPLAY CASE WILL DISPLAY CASE MANUFACTURER. DISPLAY CASE LIGHTING SHALL BE CONTROLLED VIA LCP3B.
2. DASH AREA INDICATES PORTION OF TRACK LIGHTING TO BE ON INDICATED CONTROL ZONE (EX. '1a') AND CONTROLLED VIA RELAY IN LIGHTING CONTROL PANEL.
3. TYPICAL JUNCTION BOX FOR BACK LIT MIRROR TO BE CONTROLLED VIA LOW VOLTAGE CONTROLS WITHIN DESIGNATED SPACE.
4. TYP. DECORATIVE SCONCE MOUNTED ABOVE MIRROR, 277V, CONTROLLED VIA LOW VOLTAGE CONTROLS WITHIN DESIGNATED RESTROOMS.

GENERAL NOTES

1. SEE DRAWING E-501 FOR LUMINAIRE SCHEDULE AND E-502 FOR ELECTRICAL LIGHTING CONTROL SEQUENCE OF OPERATIONS.
2. ALL EXIT SIGNS ARE TYPE 'X' UNLESS OTHERWISE NOTED. ALL EXIT SIGNS SHALL BE ON UNSWITCHED LEG OF CIRCUIT.
3. FIXTURES INDICATED FOR EMERGENCY AND EXIT SIGNS SHALL BE DESIGNATED TO PANELBOARD "L3L4A" IN BOUNDARY.
4. EXTERIOR LIGHTING CONDUIT RUNS ON THE TERRACE SHALL UTILIZE THE TERRACE STRUCTURE HSS4 MOUNTING TUBES THROUGHOUT THE TERRACE CANOPY.
5. TRACK LIGHTING SHALL BE CONTINUOUS AND CIRCUIT SEPARATION SHALL BE PROVIDED VIA USE OF JOINER COMPONENTS. CIRCUIT SEPARATION LOCATIONS SHALL BE BASED ON THE CIRCUITING AND ZONES INDICATED ON THE LIGHTING PLAN.
6. TRACK SHALL BE INSTALLED ON UNISTRUT CONSTRUCTED OF 10' GRID WITH A WEIGHT CAPACITY OF 400 LBS PER 10' SECTION.

NEW HANOVER COUNTY • NORTH CAROLINA • ESTABLISHED 1729

CFD Cape Fear Development

LS3P

101 NORTH THIRD STREET, SUITE 500
WILMINGTON, NORTH CAROLINA 28401
TEL. 910.790.3111 FAX. 910.790.9901
WWW.LS3P.COM

NEWCOMB & BOYD

5425 Page Road
Suite 215
Durham, NC 27703
T 919 783-7812
NB Contact: Brandon R. Nevin
N&B PROJECT: 21N185
Newcomb & Boyd, LLP
Firm Lic. # F-0312

NORTH CAROLINA PROFESSIONAL ENGINEER SEAL 043458 JUSTIN L. ZIEGLER

Signed on 06/21/2023 using a Digital Signature.

COPYRIGHT 2023 ALL RIGHTS RESERVED. PRINTED OR ELECTRONIC DRAWINGS AND DOCUMENTATION MAY NOT BE REPRODUCED IN ANY FORM WITHOUT WRITTEN PERMISSION FROM LS3P ASSOCIATES LTD.

Project Grace

Grace Street
Wilmington, NC 28401

LS3P PROJECT: 7701-177600

Δ	DATE	DESCRIPTION
0	2023.05.22	PERMIT SET
1	2023.06.22	Addendum #2

SHEET NAME: ELECTRICAL LIGHTING LEVEL 3 - AREA B

ORIG SUBMISSION: 2023.05.22

SHEET: **E-203B**

PERMIT SET

6/21/2023 4:31:51 PM

DocuSign Envelope ID: 4EF13051-DF60-4A58-9465-ABF420F603C0

THE LINE SHOWN ABOVE IS EXACTLY ONE INCH LONG ON ARCH E SHEETS ORIGINAL PAGE SIZE

ELECTRICAL RISER DIAGRAM LEGEND

SYMBOL	DESCRIPTION (ITEMS SHOWN DASHED ARE EXISTING)	SYMBOL	DESCRIPTION (ITEMS SHOWN DASHED ARE EXISTING)
	DISTRIBUTION EQUIPMENT (WITH HOUSEKEEPING PAD WHEN REQUIRED) SWITCHBOARD DISTRIBUTION OR BRANCH PANELBOARD	HP	MOTOR LOAD (HP AS INDICATED OR SEE MECHANICAL EQUIPMENT CONNECTION SCHEDULE FOR ADDITIONAL INFORMATION)
			FUSIBLE DISCONNECT SWITCH (SIZE/FPOLES/FUSE/ENCLOSURE TYPE IF OTHER THAN NEMA 1)
	TRANSFORMER (WITH HOUSEKEEPING PAD WHEN REQUIRED)		CIRCUIT BREAKER
			GROUNDING ELECTRODE
	ENGINE-GENERATOR SET WITH UNIT-MOUNTED CIRCUIT BREAKERS (SEE ENGINE-GENERATOR SET SCHEDULE FOR ADDITIONAL INFORMATION)	M	ELECTRONIC POWER MONITOR (INTEGRAL UON)
		S	SURGE PROTECTION DEVICE (INTEGRAL UON)
	AUTOMATIC TRANSFER SWITCH (SEE AUTOMATIC TRANSFER SWITCH SCHEDULE FOR ADDITIONAL INFORMATION)	CP	EQUIPMENT CONTROL PANEL (INTEGRAL UON)
		K	MANUAL KIRK KEY CIRCUIT BREAKER INTERLOCK
		100N	FEEDER MARK (SEE FEEDER SCHEDULE FOR ADDITIONAL INFORMATION)

EQUIPMENT NAMING SCHEME

DS - L 2 H 2 AA

PANEL SEQUENCE: (A, B, C, BA, BB, BC...)

EQUIPMENT VOLTAGE:

- 4 - 480/277 V
- 2 - 208/120 V

EQUIPMENT TYPE:

- D - DIMMING PANEL
- H - MECHANICAL PANEL
- L - LIGHTING PANEL
- P - DISTRIBTUTION PANEL
- R - RECEPTACLE PANEL
- S - SERVICE SWITCHBOARD
- PV - PV

FLOOR:

- 1 - LEVEL 1
- 2 - LEVEL 2
- 3 - LEVEL 3
- R - ROOF

POWER SOURCE:

- (BLANK) - NORMAL POWER
- E - LEGALLY REQUIRED POWER (NEC ARTICLE 701)
- L - EMERGENCY POWER (NEC ARTICLE 700)
- O - OPTIONAL STANDBY POWER (NEC ARTICLE 702)

EQUIPMENT DESIGNATION:

- ATS - AUTOMATIC TRANSFER SWITCH
- CB - CIRCUIT BREAKER
- CIS - CENTRAL INVERTER SYSTEM
- DS - DISCONNECT SWITCH
- EG - ENGINE-GENERATOR SET
- GDS - GENERATOR DOCKING STATION
- LCP - LIGHTING CONTROL PANEL
- T - DRY-TYPE TRANSFORMER

FEEDER SCHEDULE

FEEDER MARK	COPPER CONDUCTORS AND CONDUIT SIZE	ALUMINUM CONDUCTORS AND CONDUIT SIZE
50	3 #6 AND 1 #8 G ~ 1.25" C	---
60	3 #4 AND 1 #8 G ~ 1.25" C	---
60N	4 #4 AND 1 #8 G ~ 1.25" C	---
60S	3 #4 ~ 1.25" C	---
60FP	6 #4 AND 1 #8 G ~ 1.25" C	---
70	3 #4 AND 1 #8 G ~ 1.25" C	---
100	3 #2 AND 1 #8 G ~ 1.5" C	3 #1/0 AND 1 #6 G ~ 1.5" C
100N	4 #2 AND 1 #8 G ~ 1.5" C	4 #1/0 AND 1 #6 G ~ 1.5" C
100X	4 #1 AND 1 #6 G ~ 1.5" C	4 #1/0 AND 1 #4 G ~ 1.5" C
125	3 #1/0 AND 1 #6 G ~ 2" C	3 #2/0 AND 1 #4 G ~ 2" C
150	3 #2/0 AND 1 #6 G ~ 2" C	3 #4/0 AND 1 #4 G ~ 2" C
150N	4 #2/0 AND 1 #6 G ~ 2" C	4 #4/0 AND 1 #4 G ~ 2" C
150X	4 #2/0 AND 1 #4 G ~ 2" C	4 #4/0 AND 1 #2 G ~ 2" C
200N	4 #3/0 AND 1 #6 G ~ 2" C	4-250 kcmil AND 1 #4 G ~ 2.5" C
225	3 #4/0 AND 1 #4 G ~ 2.5" C	3-300 kcmil AND 1 #2 G ~ 2.5" C
225N	4 #4/0 AND 1 #4 G ~ 2.5" C	4-300 kcmil AND 1 #2 G ~ 2.5" C
225X	4 #4/0 AND 1 #2 G ~ 2.5" C	4-300 kcmil AND 1 #2 G ~ 2.5" C
300N	4-300 kcmil AND 1 #4 G ~ 3" C	4-500 kcmil AND 1 #2 G ~ 3" C
400N	4-500 kcmil AND 1 #3 G ~ 3.5" C	2 SETS (4-300 kcmil AND 1 #1 G ~ 2.5" C)
400X	2 SETS (4 #3/0 AND 1 #1/0 G ~ 2.5" C)	2 SETS (4-300 kcmil AND 1 #3/0 G ~ 2.5" C)
400S	2 SETS (4 #3/0 ~ 2.5" C)	2 SETS (4-300 kcmil ~ 2.5" C)
600N	2 SETS (4-350 kcmil AND 1 #2/0 G ~ 3" C)	2 SETS (4-500 kcmil AND 1 #4/0 G ~ 3.5" C)
2000N	7 SETS (4-350 kcmil AND 1 #3/0 G ~ 3" C)	7 SETS (4-500 kcmil AND 1 #4/0 G ~ 3.5" C)
2000S	7 SETS (4-350 kcmil ~ 3" C)	7 SETS (4-500 kcmil ~ 3.5" C)

NOTE:
1. ALUMINUM CONDUCTORS SHALL NOT BE USED FOR CONNECTION TO EQUIPMENT WHERE LISTING OR MANUFACTURER'S INSTRUCTIONS PROHIBIT THE USE OF ALUMINUM CONDUCTORS.

KEYED NOTES

ENGINE-GENERATOR SET SCHEDULE

DESIGNATION	KW	KVA	VOLTAGE	POWER FACTOR	Hz	RPM	UNIT-MOUNTED CIRCUIT BREAKERS (NOTE 4)	NOTES
EG1	400.0	500.0	480Y/277	0.8	60	1800	100/3 - ATS-L 150/3 - ATS-PD 90/3 - FIRE PUMP	2,3,5

NOTES:
1. RATING SHALL APPLY AT SITE CONDITIONS OF 36' ABOVE SEA LEVEL AND 89° AMBIENT AIR TEMPERATURE (EXCLUDING ENGINE RADIATION EFFECTS).
2. ENGINE-GENERATOR SHALL BE RATED FOR STANDBY SERVICE, 3Ø, 4-WIRE, WYE CONNECTED.
3. UNIT-MOUNTED CIRCUIT BREAKER(S) AND ENCLOSURE SHALL BE RATED SUITABLE FOR SERVICE ENTRANCE USE.
4. PROVIDE UNIT-MOUNTED CIRCUIT BREAKER(S) WITH ADJUSTABLE LSI SETTINGS.
5. ENERGY SOURCE SHALL BE DIESEL FUEL.
6. FIRE PUMP VOLTAGE DIP SHALL NOT EXCEED 15%.

DRY-TYPE TRANSFORMER SCHEDULE

DESIGNATION	RATING	VOLTAGE		TEMP RISE	GROUNDING ELECTRODE	NOTES
		PRIMARY	SECONDARY			
T-1R2A	75 kVA	480 V	208Y/120 V	115 °C	#2	
T-1R2B	112.5 kVA	480 V	208Y/120 V	115 °C	#1/0	
T-2P2A	150 kVA	480 V	208Y/120 V	115 °C	#2/0	
T-3R2A	150 kVA	480 V	208Y/120 V	115 °C	#2/0	

NOTES:
1. SEE DETAIL 9/E-601 FOR DRY-TYPE TRANSFORMER GROUNDING DETAIL.
2. GROUNDING ELECTRODE CONDUCTOR SHALL BE INSTALLED IN RACEWAY, MINIMUM GROUNDING ELECTRODE CONDUCTOR SIZE PER NEC.

AUTOMATIC TRANSFER SWITCH SCHEDULE

DESIGNATION	AMPERES	VOLTAGE	POLES	WITHSTAND RATING	LOAD PRIORITY	BYPASS ISOLATION	CLOSED TRANSITION	NOTES
ATS-PD	260	480	3	35000	1	No	No	

NOTES:
1. LOAD PRIORITY ORDER IS 0 (HIGHEST) TO 2 (LOWEST).

MANUAL TRANSFER SWITCH SCHEDULE

DESIGNATION	AMPERES	VOLTAGE	POLES	WITHSTAND RATING	Enclosure	NOTES
MTS-S	2000	480	3	65000	TYPE 1	

GENERAL NOTES

1. SEE DRAWING E-511 FOR MECHANICAL EQUIPMENT CONNECTION SCHEDULE.
2. EMERGENCY AND LEGALLY REQUIRED OVERCURRENT PROTECTIVE DEVICES SHALL BE SELECTIVELY COORDINATED TO 0.01 SECONDS WITH ALL SUPPLY SIDE OVERCURRENT PROTECTIVE DEVICES AS REQUIRED BY NC ELECTRICAL CODE ARTICLES 700 AND 701.

NEW HANOVER COUNTY • NORTH CAROLINA • ESTABLISHED 1729

CFD Cape Fear Development

LS3P

101 NORTH THIRD STREET, SUITE 500
WILMINGTON, NORTH CAROLINA 28401
TEL. 910.790.3111 FAX. 910.790.9901
WWW.LS3P.COM

NEWCOMB & BOYD NB

5425 Page Road
Suite 215
Durham, NC 27703
T 919 783-7812
NB Contact: Brandon R. Nevin
N&B PROJECT: 21N185
Newcomb & Boyd, LLP
Firm Lic. # F-0312

NORTH CAROLINA Professional Engineer SEAL 043458 ENGINEER JUSTIN L. ZIEGLER

Signed on 06/21/2023
using a Digital Signature.

COPYRIGHT 2023 ALL RIGHTS RESERVED. PRINTED OR ELECTRONIC DRAWINGS AND DOCUMENTATION MAY NOT BE REPRODUCED IN ANY FORM WITHOUT WRITTEN PERMISSION FROM LS3P ASSOCIATES LTD.

Project Grace

Grace Street
Wilmington, NC 28401

LS3P PROJECT: 7701-177600

Δ	DATE	DESCRIPTION
0	2023.05.22	PERMIT SET
1	2023.06.22	Addendum #2

SHEET NAME:
ELECTRICAL RISER DIAGRAM - LEGEND & SCHEDULES

ORIG SUBMISSION: 2023.05.22

SHEET:
E-401

PERMIT SET

6/21/2023 4:32:01 PM

1 2 3 4 5 6

A B C D E

DocuSign Envelope ID: 4EF13051-DF60-4A58-9465-ABF420F603C0

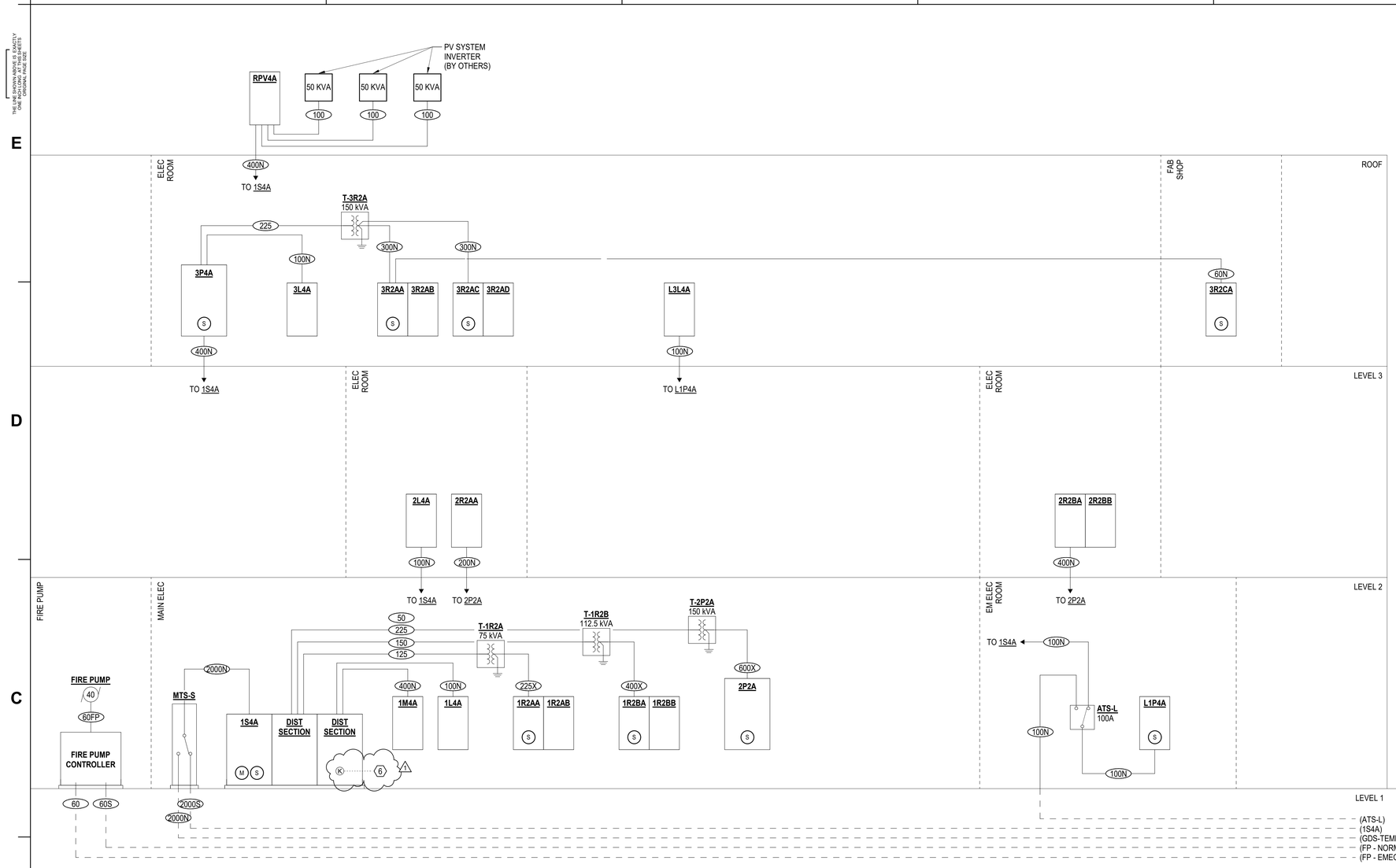

PROJECT GRACE RISER DIAGRAM

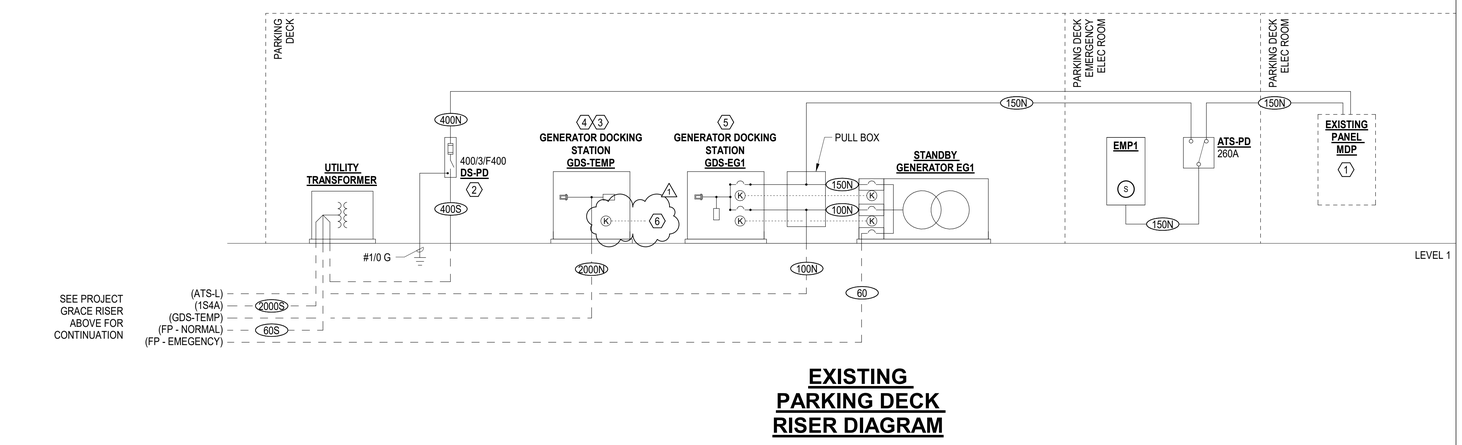

EXISTING PARKING DECK RISER DIAGRAM

KEYED NOTES

1. PARKING DECK SERVICE FEEDER BACK TO EXISTING UTILITY TRANSFORMER TO BE REMOVED AND CONDUITS SEALED. NEW SERVICE FEEDER TO BE INSTALLED AND CONNECTED TO EXISTING SERVICE PANELBOARD MDP. CUTOVER TO NEW SERVICE TO BE COORDINATED WITH OWNER TO PROVIDE MINIMAL DOWNTIME TO PARKING DECK ELECTRICAL SERVICE. REMOVE EXISTING BONDING JUMPER BETWEEN THE GROUND BUS AND NEUTRAL BUS.
2. PROVIDE 400/3/F400/3R PARKING DECK DISCONNECT SWITCH DS-PD. SWITCH SHALL BE SERVICE ENTRANCE RATED.
3. SEE DRAWING E-105 FOR ADD ALTERNATE TO LOCATE GDS-TEMP TO OPPOSITE SIDE OF PARKING DECK.
4. 2000 A GENERATOR DOCKING STATION GDS-TEMP. PROVIDE WITH 20A GFCI 125 V BATTERY CHARGER RECEPTACLE, 30A L5-30 125V BLOCK HEATER RECEPTACLE, SURGE PROTECTION DEVICE.

   BASIS OF DESIGN: TRYSTAR GDS-2
5. 250 A GENERATOR DOCKING STATION GDS-EG1. PROVIDE WITH 20A GFCI 125 V BATTERY CHARGER RECEPTACLE, 30A L5-30 125V BLOCK HEATER RECEPTACLE, SURGE PROTECTION DEVICE.

   100/3 CIRCUIT BREAKER FEEDING ATS-L
   150/3 CIRCUIT BREAKER FEEDING ATS-PD

   BASIS OF DESIGN: TRYSTAR DDDS-2
6. PROVIDE KIRK-KEY INTERLOCK BETWEEN GDS-TEMP AND 1S4A-1 SERVING PV SYSTEM PANEL RPV4A. INTERLOCK SHALL REQUIRE 1S4A CIRCUIT BREAKER SERVING PV SYSTEM PANEL RPV4A TO BE SWITCHED TO THE OFF POSITION BEFORE TRANSFERRING SWITCHBOARD 1S4A TO TEMPORARY GENERATOR.

GENERAL NOTES

1. SEE DRAWING E-401 FOR EQUIPMENT NAMING SCHEME, FEEDER SCHEDULE, DRY-TYPE TRANSFORMER SCHEDULE, ENGINE-GENERATOR SET SCHEDULE, AND AUTOMATIC TRANSFER SWITCH SCHEDULE.
2. SEE DRAWING E-511 FOR MECHANICAL EQUIPMENT CONNECTION SCHEDULE.
3. EMERGENCY AND LEGALLY REQUIRED OVERCURRENT PROTECTIVE DEVICES SHALL BE SELECTIVELY COORDINATED TO 0.01 SECONDS WITH ALL SUPPLY SIDE OVERCURRENT PROTECTIVE DEVICES AS REQUIRED BY NC ELECTRICAL CODE ARTICLES 700 AND 701.

1 **ELECTRICAL RISER DIAGRAM**
NO SCALE

NEW HANOVER COUNTY • NORTH CAROLINA • ESTABLISHED 1729
CFD Cape Fear Development
LS3P
101 NORTH THIRD STREET, SUITE 500
WILMINGTON, NORTH CAROLINA 28401
TEL. 910.790.3111 FAX. 910.790.9901
WWW.LS3P.COM
NEWCOMB & BOYD
5425 Page Road
Suite 215
Durham, NC 27703
T 919 783-7812
NB Contact: Brandon R. Nevin
N&B PROJECT: 21N185
Newcomb & Boyd, LLP
Firm Lic. # F-0312

NORTH CAROLINA PROFESSIONAL ENGINEER SEAL 043458 JUSTIN L. ZIEGLER
Signed on 06/21/2023 using a Digital Signature.

COPYRIGHT 2023 ALL RIGHTS RESERVED. PRINTED OR ELECTRONIC DRAWINGS AND DOCUMENTATION MAY NOT BE REPRODUCED IN ANY FORM WITHOUT WRITTEN PERMISSION FROM LS3P ASSOCIATES LTD.

Project Grace
Grace Street
Wilmington, NC 28401
LS3P PROJECT: 7701-177600

Δ	DATE	DESCRIPTION
0	2023.05.22	PERMIT SET
1	2023.06.22	Addendum #2

SHEET NAME: ELECTRICAL RISER DIAGRAM

ORIG SUBMISSION: 2023.05.22

SHEET: E-402

PERMIT SET

6/21/2023 4:32:06 PM

DocuSign Envelope ID: 4EF13051-DF60-4A58-9465-A8F420F603C0

THE LINE SHOWN ABOVE IS EXACTLY ONE INCH LONG ON ARCH D SHEETS ORIGINAL PAGE SIZE

LUMINAIRE SCHEDULE

TYPE	MANUFACTURER	MODEL	ACCEPTED ALTERNATE PER SPECIFICATION	SOURCE INFORMATION				ELECTRICAL INFORMATION				MOUNTING	DESCRIPTION
				TYPE	LUMEN OUTPUT	COLOR TEMP (K)	MIN CRI	VOLTAGE	LOAD (W)	LOAD (W/FT)	POWER SOURCE		
C1	LUMENWERX	UBIPERD-D-MWPL-SW-80-350-35-LENGTH-UNV-D1-1C-MOUNTING-W		LED	350/FT	3500	80	UNV		2.8	0-10V DIMMING	RECESSED, CEILING	RECESSED LINIEAR PERIMETER LED, NOMINAL 3.5" APERTURE WITH MATTE WHITE PARABOLIC LOUVER, DEEP REGRESS. MAX RECESS DEPTH 8 3/4"
EP	SURE-LITES	AP-2SQ-LED VANDAL SHIELD - VS1WP	APPROVED EQUAL	LED		-	-	UNV	1.8		-	SURFACE, WALL (7'-6" AFF UON)	EMERENCY BATTERY PACK LUMINAIRE WITH WHITE THERMOPLASTIC HOUSING, SEALED MAINTENANCE- FREE BATTERY PACK FOR 90 MIN OPERATION, AND TWO SIDE-MOUNTED HEADS. LUMINAIRE SHALL COMPLY WITH NFPA 101 AND UL 924. UL LISTED FOR DAMP LOCATIONS. PROVIDE WITH WEATHER RESISTANT VANDAL SHIELD.
L1B				LED	450	3000	70	UNV	7		LV TRANSFORMER	LANDSCAPE	COORDINATE WITH LANDSCAPE SHEETS FOR FIXTURE SPECIFICATION
LPL1				LED	450	3000	70	UNV	3		LV TRANSFORMER	LANDSCAPE	COORDINATE WITH LANDSCAPE SHEETS FOR FIXTURE SPECIFICATION
LS1				LED	68	2700	70	277	4		LV TRANSFORMER	LANDSCAPE	COORDINATE WITH LANDSCAPE SHEETS FOR FIXTURE SPECIFICATION
LST1													
LT1				LED	450	3000	70	UNV	7		LV TRANSFORMER	LANDSCAPE	COORDINATE WITH LANDSCAPE SHEETS FOR FIXTURE SPECIFICATION
LW1				LED							LV TRANSFORMER		COORDINATE WITH LANDSCAPE SHEETS FOR FIXTURE SPECIFICATION
M	METALUX	4SLSTP4035DD-UNV	APPROVED EQUAL	LED	2' - 2671 4' - 4766	3500	80	UNV	2' - 23.0 4' - 41.0		0-10V DIMMING (10%)	CHAIN HANGERS, OR SURFACE (9'-0" AFF UON)	LED STRIP LUMINAIRE WITH FROSTED DIFFUSER AND WHITE FINISH. LENGTH AS INDICATED ON THE DRAWINGS.
OP	FAIL-SAFE	TR-E-11-LD4-__W-35-OPL-__-UNV-ED-DT-OS-EL5W/ CSTG-VRSD	APPROVED EQUAL	LED	725	3500	70	UNV	20.0		ELECTRONIC DRIVER	SURFACE, WALL (7'-6" AFF UON)	11" ROUND EXTERIOR LUMINAIRE WITH DIE-CAST ALUMINUM HOUSING, HIGH ABUSE POLYCARBONATE LENS, INTERNAL OCCUPANCY SENSOR, TAMPER-PROOF SCREW HEADS, AND ___ FINISH. UL LISTED FOR WET LOCATIONS. PROVIDE WITH INTEGRAL MAINTENANCE- FREE BATTERY PACK.
OP2	NLS	HRM-1 T4 16 53 40K7 UNV WM BLK DC-EM-2X50WDRIVER	APPROVED EQUAL	LED	2850	4000	70	277	28		0-10V DIMMING	WALL	EXTERIOR WALLPACK, DIE CAST ALUMINUM, DUAL DRIVER OPTION.
P1				LED	-	3500	70	CITY			CITY	POLE BASE	COORDINATE WITH LANDSCAPE SHEETS FOR FIXTURE SPECIFICATION
P2	AXIS	B2SQDLED-300-80-35-BW-LENGTH-BLK-UNV-DP-1-MOUNTING	APPROVED EQUAL	LED	360/FT	3500	80	UNV		TBD	0-10V DIMMING	SURFACE, PENDANT	PENDANT-MOUNTED LINEAR LED, 2-1/2" W X 2-5/8" H X LENTGH AS SHOWN ON PLANS, BATWING DISTRIBUTION. FIXTURE TO BE FLUSH WITH BOTTOM OF SLATS. BLACK FINISH.
P2A	AXIS	B2SQDLED-500-80-35-BW-LENGTH-BLK-UNV-DP-1-MOUNTING	APPROVED EQUAL	LED	500/FT	3500	80	UNV		TBD	0-10V DIMMING	SURFACE, PENDANT	SAME AS TYPE 'P2' EXCEPT LUMEN OUTPUT AND WATTAGE.
P3	HOLOPHANE	PHZ 12000LM WDA 277 35K 70 CRI PM	APPROVED EQUAL	LED	12000	3500	80	277	81.0		ELECTRONIC DRIVER	PENDANT	PENDANT HIGH BAY, WIDE DISTRIBUTION, ACRYLIC LENS
P4	AXIS	TB4DILED-400-750-80-35-SL-BW-LENGTH-FINISH-UNV-DP-MOUNTING	PRUDENTIAL, FOCAL POINT	LED	400/FT INDIRECT 750/FT DIRECT	3500	80	UNV		10.45	0-10V DIMMING TO 1%	SURFACE, PENDANT	DIRECT/INDIRECT LED PENDANT, NOMINAL 4" W X 4 7/8" H X LENGTH AS SHOWN ON PLANS, SURROUNDLITE INDIRECT OPTICS AND BATWING DIRECT OPTICS. FINISH AND MOUNTING PER ARCHITECT.
P5	LITHONIA	CLX L48 5000 LM SEF WDL MVOLT GZ10 35K 80CRI	METALUX	LED	5000	3500	80	UNV	35	--	0-10V DIMMING	SURFACE, PENDANT	INDOOR 4' LED LINEAR, ACRYLIC WIDE DIFUSER LENS. MOUNTED WITH AIRCRAFT CABLE WITH FEED. SUSPENDED 9" PROM CEILING
P6	LEDALITE	7806-L-B-E-Q-G-08-7-D-E-FINISH-MOUNTING-24	APPROVED EQUAL	LED	850/FT	3500	80	UNV		7.1	0-10V DIMMING	SURFACE, PENDANT	PENDANT MOUNTED LINEAR FIXTURE 80% DOWN KIT, SEE DRAWINGS FOR LENGTH
R1	AXIS	BBRLED-500-80-35-BW-LENGTH-W-UNV-DP-1-MOUNTING	PRUDENTIAL, FOCAL POINT	LED	500/FT	3500	80	UNV		4.6	0-10V DIMMING	RECESSED, CEILING	RECESSED LINEAR LED, NOMINAL 4" APERTURE WITH FLUSH BATWING DISTRIBUTION. MAX RECESS DEPTH 3 13/16"
R1A	AXIS	BBRLED-400-80-35-BW-LENGTH-W-UNV-DP-1-MOUNTING	PRUDENTIAL, FOCAL POINT	LED	400/FT	3500	80	UNV		3.6	0-10V DIMMING	RECESSED, CEILING	SAME AS TYPE 'R1' EXCEPT LUMEN OUTPUT AND WATTAGE.
R2	AXIS	BBRLED-750-80-35-BW-LENGTH-W-UNV-DP-1-MOUNTING	PRUDENTIAL, FOCAL POINT	LED	750/FT	3500	80	UNV		7	0-10V DIMMING TO 1%	RECESSED, CEILING	RECESSED LINEAR LED, NOMINAL 4" APERTURE WITH FLUSH BATWING DISTRIBUTION. MAX RECESS DEPTH 3 15/16"
R3	USAI	B3RCM-09X3-35KS-30-S-AC-AC-NC1-UNV-D6E	ACULUX, ELEMENT	LED	750	3500	80	UNV	9.0		0-10V DIMMING	RECESSED, CEILING	RECESSED LED DOWNLIGHT, NOMINAL 3" APERTURE WITH REGRESSED 30 DEGREE BEAM AND SOLITE LENS. MAX RECESS DEPTH 5 1/2"
R3A	USAI	B3RCF-09X3-35KS-50-S-AC-AC-NC1-UNV-D6E	ACULUX, ELEMENT	LED	750	3500	80	UNV	9.0		0-10V DIMMING	RECESSED, CEILING	SAME AS TYPE 'R3' EXCEPT 50 DEGREE BEAM AND TRIM.
R4	GOTHAM	ICO4SQ-35/15-AR-LD-40D-277-GZ10	USAI, FOCAL POINT	LED	1500	3500	80	277	15.1		0-10V DIMMING	RECESSED, CEILING	RECESSED LED SQUARE DOWNLIGHT, NOMINAL 4" APERTURE WITH 40 DEGREE BEAM, CLEAR MATTE DIFFUSE REFELCTOR AND FINISH.
R6	FLUXWERX	TRANSOM 24	NO KNOWN EQUAL	LED	4400	3500	80	UNV	38.0		0-10V DIMMING	RECESSED, CEILING	2X4 RECESSED LED FIXTURE, INTEGRAL 0-10V DIMMING DRIVER TO 10%.
R7	FLUXWERX	TRANSOM 22	NO KNOWN EQUAL	LED	4000	3500	80	UNV	38.0		0-10V DIMMING	RECESSED, CEILING	2X2 RECESSED LED FIXTURE, INTEGRAL 0-10V DIMMING DRIVER TO 10%
R8	USAI	B4SAF-25-24C3-30KH-R40-S-WH-WH-NC-UNV-D6E	ACULUX, FOCAL POINT	LED	1800	3000	90	UNV	24.0		0-10V DIMMING	RECESSED, CEILING	RECESSED SQUARE ADJUSTABLE LED, NOMINAL 4" APERTURE WITH 40 DEGREE BEAM, 0-40 DEGREE VERTICAL TILT, WHITE FINISH.
R9	USAI	B4RDF-36E-35KS-90-S-AC-AC-NC-UNV-D6E	GOTHAM	LED	3450	3500	80	UNV	36		0-10V DIMMING	RECESSED, CEILING	RECESSED LED DOWNLIGHT, NOMINAL 4" APERTURE WITH 90 DEGREE BEAM AND SOLITE LENS, CLEAR MATTE ANODIZED REFLECTOR AND TRIM . MAX RECESS DEPTH 6 7/8"
R10	USAI	B4SDF-24C3-35KS-50-S-AC-AC-NC-UNV-D6E	ACULUX, FOCAL POINT	LED	1800	3500	80	UNV	24		0-10V DIMMING	RECESSED, CEILING	RECESSED LED DOWNLIGHT, NOMINAL 4" APERTURE WITH 50 DEGREE BEAM AND SOLITE LENS AND CLEAR MATTE ANODIZED BEVEL AND TRIM. MAX RECESS DEPTH 6 7/8"
R10A	USAI	B4SDF-16C3-35KS-50-S-AC-AC-NC-UNV-D6E	ACULUX, FOCAL POINT	LED	1300	3500	80	UNV	16		0-10V DIMMING	RECESSED, CEILING	SAME AS TYPE 'R10' EXCEPT LUMEN OUTPUT AND WATTAGE.
R11	USAI	B4SDF-12C3-35KS-50-S-AC-AC-FT-UNV-D6E	ACULUX, ELEMENT	LED	1125	3500	80	UNV	12		0-10V DIMMING	RECESSED, CEILING	RECESSED LED SQUARE DOWNLIGHT, NOMINAL 4" APERTURE WITH 50 DEGREE BEAM AND SOLITE LENS, CLEAR MATTE ANODIZED FINISH AND TRIM.
R12	GOTHAM	EVO6 35/30 AR WD LD MVOLT GZ10	APPROVED EQUAL	LED	2000	3500	80	MVOLT	20		0-10V DRIVER	SURFACE	6" CYLINDRICAL DOWNLIGHT. WIDE DISTRIBUTION, MATTE DIFFUSE LENS WITH CLEAR REFLECTOR.
T1	LSI	SSL230-NBX-00-120-B	NO KNOWN EQUAL	LED PAR LAMP	NA	3000	90	120	75 MAX		DIMMING	TRACK MOUNTED	TRACK MOUNTED LED FOR PAR30 LAMPING, 6 5/16" L X 4 13/16" DIAMTER, BLACK FINISH. PAIRED WITH LUMINAIRE SCHEDULE TYPE 'TR1'
TR1	LS1	31210. 31220. 31230	NO KNOWN EQUAL	NA	NA	NA	NA	120			-	SURFACE, CEILING	SURFACE MOUNTED SINGLE CIRCUIT TRACK. PROVIDE ALL PARTS NECESSARY FOR A COMPLETE AND WORKING SYSTEM. FINISH PER ARCHITECT.
UC	LITHONIA	RAZ-(12IN OR 24IN)-30K-90CRI-RAZTRANS24 MVOLT	APPROVED EQUAL	LED	1' - 434 2' - 958	3000	90	UNV	1' - 10.0 2' - 18.3	-	ELECTRONIC DRIVER	SURFACE, UNDERCABINET	UNDERCABINET LUMINAIRE WITH BRUSHED ALUMINUM FINISH. PROVIDE ALL PARTS NECESSARY FOR A COMPLETE AND WORKING SYSTEM. LENGTH AS INDICATED ON THE DRAWINGS.
W1	LITHONIA	WL4-40L-EZ1-LP835-N100-NESPDT7-DIM50	APPROVED EQUAL	LED	4000	3500	80	UNV	39.5	-	0-10V DIMMING (1%)	SURFACE, WALL (7'-6" AFF UON)	4' LINEAR FIXTURE, IMPACT MODIFIED LINEAR FACETED REFRACTOR
W2	LITHONIA	FEM-L48-4000LM-LPPFL-WD-MVOLT-GZ10-40K-80CRI	APPROVED EQUAL	LED	4000	4000	80	UNV	23.8	-	0-10V DIMMING	SURFACE, WALL	4' VAPORTIGHT LUMINAIRE WITH IMPACT-RESISTANT THERMOPLASTIC BODY, LOW-PROVIDE FROSTED POLYCARBONATE LENS, WIDE DISTRIBUTION, AND UL LISTED FOR WET LOCATIONS.
X2	LITHONIA	WLTE-W-_-R	APPROVED EQUAL	LED	-	-	-	UNV	2.7	-	-	RECESSED, WALL OR CEILING PER DRAWINGS	EXTERIOR THERMOPLASTIC EXIT SIGN WITH SINGLE- OR DOUBLE-FACE AS INDICATED ON THE DRAWINGS, RED LETTERS, WHITE HOUSING FINISH, UNIVERSAL ARROWS, AND UNIVERSAL MOUNTING. LUMINAIRE SHALL COMPLY WITH NFPA 101 AND UL 924. VISIBLE LED LAMPS ARE NOT ACCEPTABLE. UL LISTED FOR WET LOCATIONS.
XP	SURE-LITES	UX7-_-SD	APPROVED EQUAL	LED	-	-	-	UNV	1.6	-	-	RECESSED, WALL OR CEILING PER DRAWINGS	DIE CAST ALUMINUM, VANDAL RESISTANT EXIT SIGN WITH SINGLE- OR DOUBLE-FACE AS INDICATED ON THE DRAWINGS, RED LETTERS, SILVER HOUSING FINISH, UNIVERSAL ARROWS, AND UNIVERSAL MOUNTING. LUMINAIRE SHALL COMPLY WITH NFPA 101 AND UL 924. VISIBLE LED LAMPS ARE NOT ACCEPTABLE. UL LISTED FOR WET LOCATIONS. PROVIDE INTEGRAL MAINTENANCE-FREE BATTERY PACK AND SELF-DIAGNOSTICS.
XR12	GOTHAM	EVO6SC 35/30 AR WD LD MVOLT GZ10 WL	APPROVED EQUAL	LED	2000	3500	80	MVOLT	20		0-10V DRIVER	SURFACE	6" CYLINDRICAL DOWNLIGHT, WET RATED. WIDE DISTRIBUTION, MATTE DIFFUSE LENS WITH CLEAR REFLECTOR.
XT3	LUMENPULSE	LBM-VOLTAGE-30K-NF-FINISH-DIM-SY-UL-XX-XX	NO KNOWN EQUAL	LED	2334	3000	80		28		0-10V DIMMING	SURFACE	SURFACE MOUNTED LED, 8 3/8" DIAMETER X 4 13/16" D X 10 11/16" L, 20 DEGREE BEAM. UL LISTED FOR WET LOCATION.
XT3A	LUMENPULSE	LBM-VOLTAGE-30K-NS-FINISH-DIM-SY-UL-XX-XX	NO KNOWN EQUAL	LED	2467	3000	80		28		0-10V DIMMING	SURFACE	SURFACE MOUNTED LED, 8 3/8" DIAMETER X 4 13/16" D X 10 11/16" L, 10 DEGREE BEAM. UL LISTED FOR WET LOCATION.
XT4	LUMENPULSE	LBS-VOLTAGE-30K-NF-FINISH-DIM-UL-XX-XX	NO KNOWN EQUAL	LED	1125	3000	80		12.5		0-10V DIMMING	SURFACE	SURFACE MOUNTED LED, 5 7/16" DIAMETER X 4 5/8" D X 8 3/8" L, 10 DEGREE BEAM. UL LISTED FOR WET LOCATION.
Y1	TECH LIGHTING	700-TD-L-COLOR-S-LED930	NO KNOWN EQUAL	LED	500	3000	90	120	11		ELV/TRIAC DIMMING	SURFACE, PENDANT	ARCHITECT SELECTED DECORATIVE PENDANT, 5.1" DIAMETER X 39.8" H GLASS SHADE, COLOR PER ARCHIECT. SEE ARCHITECTURAL SECTIONS AND ELEVATIONS FOR MOUNTING HEIGHTS.

LUMINAIRE SCHEDULE NOTES

GENERAL:

1. EQUIPMENT AND MATERIALS, EXCEPT AS OTHERWISE SPECIFIED HEREIN, SHALL BE NEW AND SHALL BE OF THE CUSTOMARY STANDARD AND QUALITY FURNISHED BY THE DESIGNATED MANUFACTURER FOR THAT CATALOG NUMBER.
2. MATERIALS AND EQUIPMENT SHALL BE UL LISTED, SHALL MEET UL REQUIREMENTS, AND SHALL BEAR THE UL LABEL WHEREVER STANDARDS HAVE BEEN ESTABLISHED AND LABEL SERVICE IS REGULARLY FURNISHED BY UL.
3. CONTRACTOR SHALL VERIFY CEILING TRIM COMPATIBILITY OF LUMINAIRES, LUMINAIRE LOCATIONS, RECESS DEPTHS, AND FINAL VOLTAGES PRIOR TO ORDERING LUMINAIRES.
4. CONTRACTOR SHALL PROVIDE APPROVED FIRE RATED ENCLOSURES FOR ALL LUMINAIRES LOCATED IN A FIRE RATED CEILING.
5. CONTRACTOR TO PRICE AS SPECIFIED AND MUST PROVIDE "CONTRACTOR NET" UNIT PRICING FOR EACH SPECIFIED FIXTURE. UNIT PRICING SHALL BE FOR EQUIPMENT ONLY AND NOT INCLUDE INSTALLATION OR MISCELLANEOUS ELECTRICAL COSTS. THE UNIT PRICING SHALL BE GUARANTEED FOR THE PROJECT AND VALID FOR ADDITIONS AND DELETIONS THROUGHOUT THE DURATION OF THE PROJECT. FAILURE TO PROVIDE THIS COST BREAKDOWN, WILL RESULT IN THE DESIGN TEAM UNABLE TO ASSESS OR REVIEW COSTS AND/OR COST REDUCTION OPPORTUNITIES.
6. CONTRACTOR SHALL PROVIDE SEPARATE PRICING FOR LIGHTING AND LIGHTING CONTROLS.

DEFINITIONS:

1. SUBSTITUTIONS: CHANGES IN PRODUCTS, MATERIALS, AND OR/EQUIPMENT REQUIRED BY THE CONTRACT DOCUMENTS PROPOSED BY THE CONTRACTOR DURING BIDDING OR AFTER AWARD OF THE CONTRACT.
2. SHOP DRAWINGS: DETAILED CONSTRUCTION AND FABRICATION DRAWINGS PRODUCED BY THE LUMINAIRE MANUFACTURER, THAT SHOW THE PROPOSED MATERIALS, SHAPE, DIMENSIONS AND ASSEMBLY OF THE PARTS AND HOW THE UNIT WILL BE INSTALLED. THIS INCLUDES EXACT DIMENSIONS OF COMPLETE LUMINAIRE LENGTHS, PLACEMENT AND INSTALLATION INFORMATION, FEED LOCATIONS, OR DRIVER INFORMATION, FINISH AND MATERIALS INFORMATION AND DETAILS. CONTRACTOR SHALL PROVIDE SHOP DRAWINGS AFTER THE ACCEPTANCE OF SPECIFICATION CUTSHEETS IN A SUBMITTAL FORMAT.

SUBMITTALS:

1. SUBMITTALS SHALL INCLUDE ALL SPECIFIED LUMINAIRES INDICATED ON THE LUMINAIRE SCHEDULE.
2. SUBMITTALS SHALL BE PREPARED IN A LINE-BY-LINE FORMAT CORRESPONDING TO THE SPECIFICATIONS AND SHALL INDICATE COMPLIANCE WITH EACH REQUIREMENT SPECIFIED HEREIN ON THE LUMINAIRE SCHEDULE AND INDICATED ON THE LIGHTING DRAWINGS.
3. REQUIRED SUBMITTALS ARE AS FOLLOWS:
   A. LUMINAIRES
   B. DRIVERS
   C. LIGHTING CONTROL SYSTEM
   D. LOW VOLTAGE TRANSFORMERS
4. SUBMITTALS SHALL INCLUDE THE FOLLOWING INFORMATION:
   A. MANUFACTURER'S DATA
      a. NAME OF MANUFACTURER.
      b. COMPLETE CATALOG NUMBER FOR THE SPECIFIED PRODUCT.
      c. PHOTOMETRIC DATA FROM AN INDEPENDENT TESTING LABORATORY, IF APPLICABLE.
      d. CUTSHEETS OF SPECIFIED PRODUCT AND SPECIFIED ACCESSORIES SUCH AS LOUVERS, LENSES, SHADES, CONTROL STATIONS, ETC. WITH DIMENSIONS CLEARLY INDICATED.
      e. DETAILED SHOP DRAWINGS BY THE MANUFACTURER FOR EACH CUSTOM OR NON-STANDARD LUMINAIRE INDICATING FINISHED DIMENSIONS, MATERIALS, FINISHES, ETC.
5. PROJECT DATA:
   A. NAME OF PROJECT
   B. LOCATION OF PROJECT

SUBSTITUTIONS/VALUE ENGINEERING:

1. THE LIGHTING DESIGN FOR THIS PROJECT WAS BASED UPON LIGHTING EQUIPMENT TYPES AND MANUFACTURERS SPECIFIED. IF SUBSTITUTION OF LIGHTING EQUIPMENT OR MATERIALS IS DESIRED, PROVIDE A SUBSTITUTION REQUEST SUBMITTAL AS DEFINED HEREIN. FAILURE TO SUBMIT WITHIN THE PROPOSED DEADLINE CONSTITUTES A GUARANTEE THAT THE SPECIFIED FIXTURES WILL BE SUPPLIED. SUBMITTING FIXTURES NOT MEETING THESE REQUIREMENTS WILL BE REJECTED AND THE CONTRACTOR MUST PROVIDE THE SPECIFIED FIXTURES WITH NO INCREASE IN COST.
2. SUBSTITUTION REQUEST SUBMITTAL REQUIREMENTS:
   A. MUST BE RECEIVED BY THE ENGINEER FOR APPROVAL 14 DAYS PRIOR TO BID DATE. FAILURE TO SUBMIT WITHIN THAT DEADLINE CONSTITUTES A GUARANTEE THAT SPECIFIED FIXTURES WILL BE SUPPLIED.
   B. SUBMIT AT LEAST 3 COPIES OF THE SUBSTITUTION REQUEST SUBMITTAL AND PROVIDE THE FOLLOWING FOR BOTH THE SPECIFIED PRODUCT AND THE PROPOSED SUBSTITUTION PRODUCT:
      a. MANUFACTURER'S DATA AS DEFINED IN SUBMITTAL SECTION.
      b. PROJECT DATA AS DEFINED IN SUBMITTAL SECTION.
      c. IF REQUESTED BY THE ENGINEER, A NON-RETURNABLE, OPERATING SAMPLE OF PROPOSED SUBSTITUTION. NO PAYMENT SHALL BE REQUIRED FOR SAMPLES. SAMPLES SHALL BE SUPPLIED WITH STANDARD CORD AND PLUG FOR 120 VOLT OPERATION.
3. PROVIDE A DETAILED COMPARISON OF SIGNIFICANT QUALITIES OF THE PROPOSED SUBSTITUTION WITH THOSE OF THE SPECIFIED PRODUCT. SIGNIFICANT QUALITIES MAY INCLUDE ELEMENTS SUCH AS PHOTOMETRY, HOUSING DIMENSIONS, MATERIAL COMPOSITION AND FINISH, AND VISUAL APPEARANCE.
4. CONTRACTOR MUST PROVIDE LIGHTING CALCULATIONS FOR THE SPACES BEING CONSIDERED, DEMONSTRATING THAT THE PROPOSED FIXTURE(S) MEET(S) OR EXCEEDS THAT OF THE SPECIFIED PRODUCT(S). CONTRACTOR MUST ALSO INCLUDE COMPARISON SUMMARIES OF THE LIGHT LEVELS FOR THOSE SPACES.
5. PROVIDE A STATEMENT INDICATING THE SUBSTITUTION/VALUE ENGINEERED EFFECT ON THE CONTRACTOR'S CONSTRUCTION SCHEDULE COMPARED TO THE SCHEDULE WITHOUT APPROVAL OF THE SUBSTITUTION. INDICATE THE EFFECT OF THE PROPOSED SUBSTITUTION ON OVERALL CONTRACT TIME.
6. PROVIDE THE CONTRACTOR'S CERTIFICATION THAT THE PROPOSED SUBSTITUTION CONFORMS TO THE REQUIREMENTS IN THE CONTRACT DOCUMENTS IN EVERY RESPECT AND IS APPROPRIATE FOR THE APPLICATIONS INDICATED.
7. PROVIDE THE CONTRACTOR'S WAIVER OF RIGHTS TO ADDITIONAL PAYMENT OR TIME THAT MAY SUBSEQUENTLY BECOME NECESSARY BECAUSE OF THE FAILURE OF THE SUBSTITUTION/VALUE ENGINEERED PRODUCT TO PERFORM ADEQUATELY.
8. PROVIDE "CONTRACTOR NET" UNIT PRICING FOR THE SPECIFIED LUMINAIRE AND THE PROPOSED SUBSTITUTION/VALUE ENGINEERED FIXTURE. CONTRACTOR MUST ALSO SHOW HOW THE EQUIPMENT SAVINGS AND INSTALL SAVINGS ARE DERIVED.
9. MODIFICATIONS REQUIRED TO ANY BUILDING EQUIPMENT OR SYSTEM DUE TO THE SUBSTITUTION OF A LUMINAIRE TYPE SHALL BE DESIGNED AND CONSTRUCTED AT THE CONTRACTOR'S EXPENSE.

NEW HANOVER COUNTY • NORTH CAROLINA ESTABLISHED 1729

CFD Cape Fear Development

LS3P

101 NORTH THIRD STREET, SUITE 500
WILMINGTON, NORTH CAROLINA 28401
TEL. 910.790.3111 FAX. 910.790.9901
WWW.LS3P.COM

NEWCOMB & BOYD NB
5425 Page Road
Suite 215
Durham, NC 27703
T 919 783-7812
NB Contact: Brandon R. Nevin
N&B PROJECT: 21N185
Newcomb & Boyd, LLP
Firm Lic. # F-0312

NORTH CAROLINA PROFESSIONAL ENGINEER SEAL 043458 JUSTIN L. ZIEGLER ENGINEER

Signed on 06/21/2023 using a Digital Signature.

COPYRIGHT 2023 ALL RIGHTS RESERVED. PRINTED OR ELECTRONIC DRAWINGS AND DOCUMENTATION MAY NOT BE REPRODUCED IN ANY FORM WITHOUT WRITTEN PERMISSION FROM LS3P ASSOCIATES LTD.

Project Grace

Grace Street
Wilmington, NC 28401

LS3P PROJECT: 7701-177600

Δ	DATE	DESCRIPTION
0	2023.05.22	PERMIT SET
1	2023.06.22	Addendum #2

SHEET NAME: ELECTRICAL SCHEDULES - LUMINAIRE

ORIG SUBMISSION: 2023.05.22

SHEET: E-501

PERMIT SET

6/21/2023 4:32:12 PM

E D C B A

1 2 3 4 5 6

DocuSign Envelope ID: 4EF13051-DF60-4A58-9465-A8F420F603C0

THE LINE SHOWN ABOVE IS EXACTLY ONE INCH LONG AT THIS SHEETS ORIGINAL PAGE SIZE

MECHANICAL EQUIPMENT CONNECTION SCHEDULE - PROJECT GRACE

DESIGNATION	FLA	KW	HP	VOLTAGE	# OF POLES	FEEDER	PANEL	CIRCUIT	DISCONNECT (NOTE 1)	NOTES
AIR COOLED CHILLERS										
ACH-R-1	245	-	-	480 V	3	3-400 kcmil & 1#3 G - 3"	1S4A	5	VFD	4
ACH-R-2	245	-	-	480 V	3	3-400 kcmil & 1#3 G - 3"	1S4A	6	VFD	4
AIR CURTAIN										
AC-3-1	2.2	-	-	120 V	1	2#12 & 1#12 G - 0.5"	3R2AC	33	30/2/NF	1,2
AIR HANDLER HUMIDIFER										
SG-R-1	184			480 V	3	3-300 kcmil & 1#4 G ~ 3"	1S4A	17	400/3/NF/3R	2
SG-R-2	130	-	-	277 V	1	2#2/0 & 1 #6 G ~ 1.5"	1S4A	18	200/3/NF/3R	2
AIR HANDLER UNITS										
AHU-R-1	80	-	-	480 V	3	3 #2 & 1 #8G ~ 1.5"	1S4A	12	100/3/NF/3R	1
AHU-R-1 (LTG & RCPT)	5.0	-	-	120 V	1	2 #12 & 1 #12G ~ 0.5"	3R2AA	22	30/2/NF/3R	2
AHU-R-1 (UV LIGHTS)	6.5	-	-	120 V	1	2 #12 & 1 #12G ~ 0.5"	3R2AA	20	30/2/NF/3R	2
AHU-R-2	80	-	-	480 V	3	3 #2 & 1 #8G ~ 1.5"	1S4A	11	100/3/NF/3R	1
AHU-R-2 (LTG & RCPT)	5.0	-	-	120 V	1	2 #12 & 1 #12G ~ 0.5"	3R2AA	18	30/2/NF/3R	2
AHU-R-2 (UV LIGHTS)	6.5	-	-	120 V	1	2#12 & 1#12 G - 0.5"	3R2AA	16	30/2/NF/3R	2
BOILERS										
B-1-1	13	-	-	120 V	1	2 #12 & 1 #12G ~ 0.5"	1R2AA	2	30/2/NF	2
B-1-2	13	-	-	120 V	1	2 #12 & 1 #12G ~ 0.5"	1R2AA	4	30/2/NF	2
DUCTLESS SPLIT SYSTEMS										
SSAC-1-1	14.0	-	-	208 V	2	2 #12 & 1 #12G ~ 0.5"	3R2AA	3,5	30/2/NF/3R	2,5
SSAC-1-2	14.0	-	-	208 V	2	2 #12 & 1 #12G ~ 0.5"	3R2AA	7,9	30/2/NF/3R	2,5
SSAC-1-3	14.0	-	-	208 V	2	2 #12 & 1 #12G ~ 0.5"	3R2AA	15,17	30/2/NF/3R	2,5
SSAC-1-4	23.3	-	-	208 V	2	2 #10 & 1 #10G ~ 0.5"	3R2AA	19,21	30/2/NF/3R	2,5
SSAC-2-1	14.0	-	-	208 V	2	2 #12 & 1 #12G ~ 0.5"	3R2AA	23,25	30/2/NF/3R	2,5
SSAC-3-1	14.0	-	-	208 V	2	2 #12 & 1 #12G ~ 0.5"	3R2AA	27,29	30/2/NF/3R	2,5
SSAC-3-2	14.0	-	-	208 V	2	2 #12 & 1 #12G ~ 0.5"	3R2AA	31,33	30/2/NF/3R	2,5
ENERGY RECOVERY UNITS										
ERU-R-1 (EXHAUST)	39.6	-	-	480 V	3	3 #6 & 1 #8 ~ 1.25"	1S4A	7	60/3/NF/3R	1
ERU-R-1 (LTG & RCPT)	5.0	-	-	120 V	1	2 #12 & 1 #12G ~ 0.5"	3R2AA	14	30/2/NF/3R	2
ERU-R-1 (SUPPLY)	54.2	-	-	480 V	3	3 #6 & 1 #8 ~ 1.25"	1S4A	8	60/3/NF/3R	1
ERU-R-1 (WHEEL)	-	-	1.5	208 V	2	3#12 & #12 G - 0.75"	3R2AA	24,26	30/2/NF/3R	2,3
FANS										
EF-1-1	-	-	1	480 V	3	3#12 & #12 G - 0.75"	1M4A	14,16,18	30/3/NF	2
FINNED TUBE RADIATORS										
FH-1-1	-	2.0	-	277 V	1	2 #6 & 1 #10G ~ 1"	1M4A	9	-	4
FH-1-2	-	2.0	-	277 V	1	2 #6 & 1 #10G ~ 1"	1M4A	9	-	4
FH-1-3	-	2.0	-	277 V	1	2 #6 & 1 #10G ~ 1"	1M4A	9	-	4
FH-1-4	-	2.0	-	277 V	1	2 #6 & 1 #10G ~ 1"	1M4A	9	-	4
FH-1-5	-	2.0	-	277 V	1	2 #6 & 1 #10G ~ 1"	1M4A	9	-	4
FH-1-6	-	1.5	-	277 V	1	2 #4 & 1 #8G ~ 1.25"	1M4A	7	-	4
FH-1-7	-	1.5	-	277 V	1	2 #4 & 1 #8G ~ 1.25"	1M4A	7	-	4
FH-1-8	-	1.5	-	277 V	1	2 #4 & 1 #8G ~ 1.25"	1M4A	7	-	4
FH-1-9	-	1.5	-	277 V	1	2 #4 & 1 #8G ~ 1.25"	1M4A	7	-	4
FH-1-10	-	1.5	-	277 V	1	2 #4 & 1 #8G ~ 1.25"	1M4A	7	-	4
FH-1-11	-	2.0	-	277 V	1	2 #4 & 1 #8G ~ 1.25"	1M4A	7	-	4
FH-1-12	-	1.5	-	277 V	1	2 #4 & 1 #8G ~ 1.25"	1M4A	3	-	4
FH-1-13	-	2.0	-	277 V	1	2 #4 & 1 #8G ~ 1.25"	1M4A	3	-	4
FH-1-14	-	2.0	-	277 V	1	2 #4 & 1 #8G ~ 1.25"	1M4A	3	-	4
FH-1-15	-	2.0	-	277 V	1	2 #4 & 1 #8G ~ 1.25"	1M4A	3	-	4
FH-1-16	-	2.0	-	277 V	1	2 #4 & 1 #8G ~ 1.25"	1M4A	5	-	4
FH-1-17	-	1.0	-	277 V	1	2 #4 & 1 #8G ~ 1.25"	1M4A	5	-	4
FH-1-18	-	1.0	-	277 V	1	2 #6 & 1 #10G ~ 1"	1M4A	5	-	4
FH-1-19	-	1.0	-	277 V	1	2 #6 & 1 #10G ~ 1"	1M4A	5	-	4
FH-1-20	-	2.0	-	277 V	1	2 #6 & 1 #10G ~ 1"	1M4A	1	-	4
FH-1-21	-	2.0	-	277 V	1	2 #6 & 1 #10G ~ 1"	1M4A	1	-	4
FH-1-22	-	2.0	-	277 V	1	2 #6 & 1 #10G ~ 1"	1M4A	1	-	4
PUMPS										
ACHP1-2	-	-	20	480 V	3	3#8 & 1#10 G - 1"	1M4A	17,19,21	VFD	2,3
ACHP-1-1	-	-	20	480 V	3	3#8 & 1#10 G - 1"	1M4A	11,13,15	VFD	2,3
FP-2	-	-	3/4	208 V	3	2#12 & 1#12 G - 0.5"	1R2BA	12,14,16	-	8
PHWP-1-1	-	-	5	480 V	3	3#12 & #12 G - 0.75"	1M4A	23,25,27	VFD	2,3
PHWP-1-2	-	-	5	480 V	3	3#12 & #12 G - 0.75"	1M4A	29,31,33	VFD	2,3
RCP-1-1	-	0.2	-	208 V	2	2 #12 & 1 #12G ~ 0.5"	1R2AA	45,47	30/2/NF	2,3
SHWP-1-1	-	-	5	480 V	3	3#12 & 1#20 G - 0.75"	1M4A	35,37,39	VFD	2,3
SHWP-1-2	-	-	5	480 V	3	3#12 & 1#20 G - 0.75"	1M4A	2,4,6	VFD	2,3
WPB-1-1	10	-	-	480 V	3	2#12 & 1#12 G - 0.5"	1M4A	8,10,12	-	4
SUMP PUMP										
SP-1-1	-	2	-	208 V	2	2 #12 & 1 #12G ~ 0.5"	1R2BA	18,20	30/2/NF/3R	2
SP-1-2	-	2	-	208 V	2	2 #12 & 1 #12G ~ 0.5"	1R2BA	22,24	30/2/NF/3R	2
SP-3	-	2	-	208 V	2	2 #12 & 1 #12G ~ 0.5"	1R2BA	26,28	30/2/NF/3R	2
UNIT HEATERS										
UH-1-1	-	2.0	-	208 V	2	2#12 & 1#12 G - 0.5"	1R2AB	18,20	30/2/NF	1,2
UH-1-2	-	2.0	-	208 V	2	2#12 & 1#12 G - 0.5"	1R2BA	8,10	30/2/NF	1,2
UH-1-3	-	1.5	-	208 V	2	2#12 & 1#12 G - 0.5"	1R2AB	24,26	30/2/NF	1,2
UH-1-4	-	0.5	-	120 V	1	2#12 & 1#12 G - 0.5"	1R2BA	50	30/1/NF	1,2
UH-3-1	-	1.5	-	208 V	2	2#12 & 1#12 G - 0.5"	3R2AC	35,37	30/2/NF	1,2
WATER HEATERS										
WH-1-1	-	54	-	480 V	3	3 #2 & 1 #8G ~ 1.5" C	1M4A	20,22,24	100/3/NF	

MECHANICAL EQUIPMENT CONNECTION SCHEDULE - PARKING DECK

DESIGNATION	FLA	KW	HP	VOLTAGE	# OF POLES	FEEDER	PANEL	CIRCUIT	DISCONNECT (NOTE 1)	NOTES
FANS										
F-0-1	-	-	2	480 V	3	3 #10 & 1 #10 G - 0.75"C			30/3/NF/3R	2
F-1-2	-	-	2	480 V	3	3 #10 & 1 #10 G - 0.75"C	EMP1	1,3,5	30/3/NF/3R	2
F-1-3	-	-	2	480 V	3	3 #10 & 1 #10 G - 0.75"C	EMP1	1,3,5	30/3/NF/3R	2
F-1-4	-	-	2	480 V	3	3 #10 & 1 #10 G - 0.75"C	EMP1	1,3,5	30/3/NF/3R	2
F-1-5	-	-	2	480 V	3	3 #10 & 1 #10 G - 0.75"C	EMP1	1,3,5	30/3/NF/3R	2
F-1-6	-	-	2	480 V	3	3 #10 & 1 #10 G - 0.75"C	EMP1	1,3,5	30/3/NF/3R	2
F-1-7	-	-	2	480 V	3	3 #10 & 1 #10 G - 0.75"C	EMP1	1,3,5	30/3/NF/3R	2
F-2-1	-	-	2	480 V	3	3 #10 & 1 #10 G - 0.75"C	EMP1	7,9,11	30/3/NF/3R	2
F-2-2	-	-	2	480 V	3	3 #10 & 1 #10 G - 0.75"C	EMP1	7,9,11	30/3/NF/3R	2
F-2-3	-	-	2	480 V	3	3 #10 & 1 #10 G - 0.75"C	EMP1	7,9,11	30/3/NF/3R	2
F-2-4	-	-	2	480 V	3	3 #10 & 1 #10 G - 0.75"C	EMP1	7,9,11	30/3/NF/3R	2
F-2-5	-	-	2	480 V	3	3 #10 & 1 #10 G - 0.75"C	EMP1	7,9,11	30/3/NF/3R	2
F-2-6	-	-	2	480 V	3	3 #10 & 1 #10 G - 0.75"C	EMP1	7,9,11	30/3/NF/3R	2
F-3-1	-	-	2	480 V	3	3 #10 & 1 #10 G - 0.75"C	EMP1	13,15,17	30/3/NF/3R	2
F-3-2	-	-	2	480 V	3	3 #10 & 1 #10 G - 0.75"C	EMP1	13,15,17	30/3/NF/3R	2
F-3-3	-	-	2	480 V	3	3 #10 & 1 #10 G - 0.75"C	EMP1	13,15,17	30/3/NF/3R	2
F-3-4	-	-	2	480 V	3	3 #10 & 1 #10 G - 0.75"C	EMP1	13,15,17	30/3/NF/3R	2
F-3-5	-	-	2	480 V	3	3 #10 & 1 #10 G - 0.75"C	EMP1	13,15,17	30/3/NF/3R	2
F-3-6	-	-	2	480 V	3	3 #10 & 1 #10 G - 0.75"C	EMP1	13,15,17	30/3/NF/3R	2
F-4-1	-	-	2	480 V	3	3 #10 & 1 #10 G - 0.75"C	EMP1	2,4,6	30/3/NF/3R	2
F-4-2	-	-	2	480 V	3	3 #10 & 1 #10 G - 0.75"C	EMP1	2,4,6	30/3/NF/3R	2
F-4-3	-	-	2	480 V	3	3 #10 & 1 #10 G - 0.75"C	EMP1	2,4,6	30/3/NF/3R	2
F-4-4	-	-	2	480 V	3	3 #10 & 1 #10 G - 0.75"C	EMP1	2,4,6	30/3/NF/3R	2
F-4-5	-	-	2	480 V	3	3 #10 & 1 #10 G - 0.75"C	EMP1	2,4,6	30/3/NF/3R	2
F-4-6	-	-	2	480 V	3	3 #10 & 1 #10 G - 0.75"C	EMP1	2,4,6	30/3/NF/3R	2
F-5-1	-	-	2	480 V	3	3 #10 & 1 #10 G - 0.75"C	EMP1	8,10,12	30/3/NF/3R	2
F-5-2	-	-	2	480 V	3	3 #10 & 1 #10 G - 0.75"C	EMP1	8,10,12	30/3/NF/3R	2
F-5-3	-	-	2	480 V	3	3 #10 & 1 #10 G - 0.75"C	EMP1	8,10,12	30/3/NF/3R	2
F-5-4	-	-	2	480 V	3	3 #10 & 1 #10 G - 0.75"C	EMP1	8,10,12	30/3/NF/3R	2
F-5-5	-	-	2	480 V	3	3 #10 & 1 #10 G - 0.75"C	EMP1	8,10,12	30/3/NF/3R	2
F-5-6	-	-	2	480 V	3	3 #10 & 1 #10 G - 0.75"C	EMP1	8,10,12	30/3/NF/3R	2

SCHEDULE NOTES

1. IF EQUIPMENT IS PROVIDED WITH INTEGRAL DISCONNECT SWITCH, AN ADDITIONAL DISCONNECT SWITCH SHALL NOT BE REQUIRED EXCEPT FOR EXTERIOR LOCATIONS WHERE VFD/STARTER IS LOCATED OUT OF SIGHT OF EQUIPMENT, THEN PROVIDE DISCONNECT SWITCH AS NOTED.
2. LOCATE DISCONNECT SWITCH OR VFD IN ACCESSIBLE LOCATION WITHIN SIGHT OF EQUIPMENT PER NEC REQUIREMENTS.
3. CIRCUIT EQUIPMENT THRU VFD/STARTER. SEE MECHANICAL DRAWINGS FOR VFD/STARTER LOCATION.
4. DISCONNECT SWITCH AND/OR CONTROLLER INTEGRAL TO EQUIPMENT.
5. SPLIT SYSTEM INDOOR UNIT IS POWERED BY OUTDOOR UNIT. LOW VOLTAGE POWER WIRING BETWEEN INDOOR AND OUTDOOR UNIT TO BE INSTALLED BY MECHANICAL CONTRACTOR.
6. PROVIDE PROVISIONS TO LOCK DISCONNECT SWITCH SERVING EQUIPMENT IN ELEVATOR MACHINE ROOM IN THE OPEN POSITION.
7. PROVIDE PROVISIONS FOR LOCKING ON CIRCUIT BREAKER TO SERVE AS DISCONNECTING MEANS PER NEC 422.31. PROVIDE LABEL ON EQUIPMENT STATING THE FOLLOWING (SPECIFIC PANEL NAME AND CIRCUIT NUMBER FOR RESPECTIVE EQUIPMENT SHALL BE INPUT ON THE LABEL):

   CIRCUIT __ IN PANEL _____ SHALL BE LOCKED IN THE OFF POSITION WHEN PERFORMING MAINTENANCE.
8. CIRCUIT EQUIPMENT THRU JOCKEY PUMP CONTROLLER.

GENERAL NOTES

1. ALL DISCONNECT SWITCHES, ENCLOSED CIRCUIT BREAKERS, STARTERS, CONTACTORS, AND CONTROL PANELS FURNISHED WITH MECHANICAL AND PLUMBING EQUIPMENT SHALL BE RATED AND LISTED FOR THE AVAILABLE SHORT CIRCUIT FAULT CURRENT CALCULATED UNDER THE ELECTRICAL SUB-CONTRACT.

NEW HANOVER COUNTY • NORTH CAROLINA • ESTABLISHED 1729

CFD Cape Fear Development

LS3P
101 NORTH THIRD STREET, SUITE 500
WILMINGTON, NORTH CAROLINA 28401
TEL. 910.790.3111 FAX. 910.790.9901
WWW.LS3P.COM

NEWCOMB & BOYD NB
5425 Page Road
Suite 215
Durham, NC 27703
T 919 783-7812
NB Contact: Brandon R. Nevin
N&B PROJECT: 21N185
Newcomb & Boyd, LLP
Firm Lic. # F-0312

NORTH CAROLINA PROFESSIONAL ENGINEER SEAL 043458 JUSTIN L. ZIEGLER
Signed on 06/21/2023 using a Digital Signature.

COPYRIGHT 2023 ALL RIGHTS RESERVED. PRINTED OR ELECTRONIC DRAWINGS AND DOCUMENTATION MAY NOT BE REPRODUCED IN ANY FORM WITHOUT WRITTEN PERMISSION FROM LS3P ASSOCIATES LTD.

Project Grace
Grace Street
Wilmington, NC 28401
LS3P PROJECT: 7701-177600

Δ	DATE	DESCRIPTION
0	2023.05.22	PERMIT SET
1	2023.06.22	Addendum #2

SHEET NAME: ELECTRICAL SCHEDULES - MECHANICAL EQUIPMENT

ORIG SUBMISSION: 2023.05.22

SHEET: E-511

PERMIT SET

6/21/2023 4:32:19 PM

DocuSign Envelope ID: 4EF13051-DF60-4A58-9465-A8F420F603C0

THE LINE SHOWN ABOVE IS EXACTLY ONE INCH LONG ON ALL SHEETS ORIGINAL PAGE SIZE

SWITCHBOARD "1S4A" SCHEDULE

VOLTAGE: 480/277 Wye
PHASES: 3
WIRE: 4
FED FROM: UTILITY XFMR
LOCATION: MAIN ELEC C106

BUS RATING: 2000 A
MAIN TYPE: 2000A/3P MCB
SCCR: 65,000

MOUNTING: FLOOR
ENCLOSURE: TYPE 1
SURGE PROTECTION: Yes
POWER MONITOR: Yes

CKT	LOAD DESCRIPTION	FRAME	TRIP	POLES	Load	WIRE & CONDUIT	REMARKS
1	RPV4A	400 A	400 A	3	0.0	SEE DRAWING E-402	SHUNT TRIP, 5
2	2L4A	100 A	100 A	3	11.8	SEE DRAWING E-402	
3	1L4A	100 A	100 A	3	7.5	SEE DRAWING E-402	
4	3P4A	600 A	600 A	3	159.5	SEE DRAWING E-402	5
5	ACH-R-1	400 A	350 A	3	220.0	SEE DRAWING E-511	5
6	ACH-R-2	400 A	350 A	3	220.0	SEE DRAWING E-511	5
7	ERU-R-1 (EXHAUST)	100 A	50 A	3	32.9	SEE DRAWING E-511	
8	ERU-R-1 (SUPPLY)	100 A	70 A	3	45.0	SEE DRAWING E-511	
9	2P2A	250 A	225 A	3	82.1	SEE DRAWING E-402	5
10	PANEL 1M4A	250 A	200 A	3	166.7	SEE DRAWING E-511	5
11	AHU-R-2	250 A	125 A	3	83.1	SEE DRAWING E-511	5
12	AHU-R-1	250 A	125 A	3	83.1	SEE DRAWING E-511	5
13	FREIGHT ELEVATOR	200 A	200 A	3	71.5	3#3/0 & 1#6 G ~ 2"C	SHUNT TRIP
14	1R2AA VIA T-1R2A	250 A	125 A	3	113.1	SEE DRAWING E-402	
15	1R2BA VIA T-1R2B	250 A	175 A	3	58.3	SEE DRAWING E-402	
16	AT3-L	100 A	100 A	3	10.1	SEE DRAWING E-402	
17	SG-R-1	250 A	250 A	3	152.0	SEE DRAWING E-511	
18	SG-R-2	200 A	175 A	3	36.0	SEE DRAWING E-511	
19	SPACE (400A/3P PROVISION)	--	--	--	0.0	--	--
20	SPACE (400A/3P PROVISION)	--	--	--	0.0	--	--
21	SPACE (400A/3P PROVISION)	--	--	--	0.0	--	--
				TOTAL CONNECTED (KVA):	1552.7		
				TOTAL CONNECTED (A):	1867.7		
				TOTAL CALCULATED (KVA):	1424.0		
				TOTAL CALCULATED (A):	1712.8		

NOTES:
1. SWITCHBOARD SHALL BE SERVICE ENTRACE RATED.
2. MAIN CIRCUIT BREAKER SHALL BE 100% SERVICE RATED WITH GROUND FAULT PROTECTION, ADJUSTABLE LSI SETTINGS.
3. PROVIDE FULLY RATED CIRCUIT BREAKER AND BUS BRACING RMS SYMMETRICAL.
4. SEE RISER DIAGRAM FOR POWER MONITORING AND SURGE PROTECTION REQUIREMENTS.
5. CIRCUIT BREAKER SHALL HAVE ADJUSTIBLE LSI SETTINGS AND GROUND FAULT PROTECTION. KIRK KEY INTERLOCK, PER DRAWING E-401

ELECTRICAL EQUIPMENT SCHEDULE

DESIGNATION	VOLTAGE	PHASE	NO. OF WIRES	BUS RATING	MAIN TYPE	NO. OF POLES	SECTION NUMBER	FED FROM	TOTAL DEMAND	LUGS		SHORT CIRCUIT CURRENT		POWER MONITOR	SURGE PROTECTIVE DEVICE	ENCLOSURE	MOUNTING
										SUB-FEED	FEED-THRU	AVAILABLE	RATING				
LEVEL 1 (+41.25')																	
1L4A	480Y/277	3	4	100 A	MLO	30	1	1S4A	9.1 A	No	No	37,400	42,000	No	No	TYPE 1	SURFACE
1M4A	480Y/277	3	4	400 A	MLO	42	1	1S4A	158.4 A	No	No	44,800	65,000	No	No	TYPE 1	SURFACE
1R2AA	208Y/120	3	4	225 A	225A/3P MCB	60	1	T-1R2A	277.5 A	No	Yes	5,900	10,000	No	Yes	TYPE 1	SURFACE
1R2AB	208Y/120	3	4	225 A	MLO	60	2	1R2AA	75.8 A	No	No	5,900	10,000	No	No	TYPE 1	SURFACE
1R2BA	208Y/120	3	4	400 A	400A/3P MCB	60	1	T-1R2B	135.5 A	No	Yes	6,300	10,000	No	Yes	TYPE 1	SURFACE
1R2BB	208Y/120	3	4	400 A	MLO	60	2	1R2BA	67.8 A	No	No	6,300	10,000	No	No	TYPE 1	SURFACE
1S4A	480Y/277	3	4	2000 A	2000A/3P MCB		1	UTILITY XFMR	1712.8 A	No	No	49,700	65,000	Yes	Yes	TYPE 1	FLOOR
2P2A	208Y/120	3	4	600 A	600A/3P MCB	12	1	T-2P2A	159.0 A	No	No	8,400	18,000	No	Yes	TYPE 1	SURFACE
EMP1	480Y/277	3	4	225 A	MLO	30	1	ATS-PD	116.8 A	No	No	18,600	25,000	No	Yes	TYPE 1	SURFACE
L1P4A	480Y/277	3	4	100 A	MLO	30	1	MTS-S	12.2 A	No	Yes	28,000	35,000	No	Yes	TYPE 1	SURFACE
LEVEL 2 (+59.75')																	
2L4A	480Y/277	3	4	100 A	MLO	30	1	1S4A	14.2 A	No	No	15,800	25,000	No	No	TYPE 1	SURFACE
2R2AA	208Y/120	3	4	225 A	MLO	60	1	2P2A	78.1 A	No	No	6,000	10,000	No	No	TYPE 1	SURFACE
2R2BA	208Y/120	3	4	400 A	MLO	60	1	2P2A	94.8 A	No	Yes	5,700	10,000	No	No	TYPE 1	SURFACE
2R2BB	208Y/120	3	4	400 A	MLO	60	2	2R2BA	61.1 A	No	No	5,700	10,000	No	No	TYPE 1	SURFACE
LEVEL 3 (+76.75')																	
3L4A	480Y/277	3	4	100 A	MLO	30	1	3P4A	5.8 A	No	No	25,100	35,000	No	No	TYPE 1	SURFACE
3P4A	480Y/277	3	4	400 A	400A/3P MCB	72	1	1S4A	154.0 A	No	No	30,900	42,000	No	Yes	TYPE 1	SURFACE
3R2AA	208Y/120	3	4	400 A	300A/3P MCB	60	1	T-3R2A	198.0 A	No	Yes	7,800	10,000	No	Yes	TYPE 1	SURFACE
3R2AB	208Y/120	3	4	400 A	MLO	60	2	3R2AA	80.9 A	No	No	7,800	10,000	No	No	TYPE 1	SURFACE
3R2AC	208Y/120	3	4	400 A	300A/3P MCB	60	1	T-3R2A	84.1 A	No	Yes	7,700	10,000	No	Yes	TYPE 1	SURFACE
3R2AD	208Y/120	3	4	400 A	MLO	60	2	3R2AC	44.0 A	No	No	7,700	10,000	No	No	TYPE 1	SURFACE
3R2CA	208Y/120	3	4	100 A	60A/3P MCB	30	1	3R2AA	8.5 A	No	No	2,000	10,000	No	Yes	TYPE 1	SURFACE
L3L4A	480Y/277	3	4	100 A	MLO	30	1	L1P4A	2.8 A	No	No	5,300	10,000	No	No	TYPE 1	SURFACE
LEVEL 4 (+96.25')																	
RPV4A	480Y/277	3	4	400 A	400A/3P MCB	18	1	1S4A	0.0 A	No	Yes	33,400	42,000	No	Yes	TYPE 3R	SURFACE

101 NORTH THIRD STREET, SUITE 500
WILMINGTON, NORTH CAROLINA 28401
TEL. 910.790.3111 FAX. 910.790.9901
WWW.LS3P.COM

NEWCOMB & BOYD

5425 Page Road
Suite 215
Durham, NC 27703
T 919 783-7812
NB Contact: Brandon R. Nevin
N&B PROJECT: 21N185
Newcomb & Boyd, LLP
Firm Lic. # F-0312

NORTH CAROLINA PROFESSIONAL ENGINEER SEAL 043458 JUSTIN L. ZIEGLER

Signed on 06/21/2023
using a Digital Signature.

COPYRIGHT 2023 ALL RIGHTS RESERVED. PRINTED OR ELECTRONIC DRAWINGS AND DOCUMENTATION MAY NOT BE REPRODUCED IN ANY FORM WITHOUT WRITTEN PERMISSION FROM LS3P ASSOCIATES LTD.

Project Grace
Grace Street
Wilmington, NC 28401
LS3P PROJECT: 7701-177600

Δ	DATE	DESCRIPTION
0	2023.05.22	PERMIT SET
1	2023.06.22	Addendum #2

SHEET NAME:
ELECTRICAL SCHEDULES - PANELBOARD AND EQUIPMENT

ORIG SUBMISSION: 2023.05.22

SHEET: E-521

PERMIT SET

6/21/2023 4:32:24 PM

1S4A | ELECTRICAL EQUIPMENT SCHEDULE

THE ORIGINAL SHEET SIZE OF THIS DRAWING IS 24"X36". IF NOT ONE INCH LONG, ADJUST SCALES ACCORDINGLY. ORIGINAL PAGE SIZE

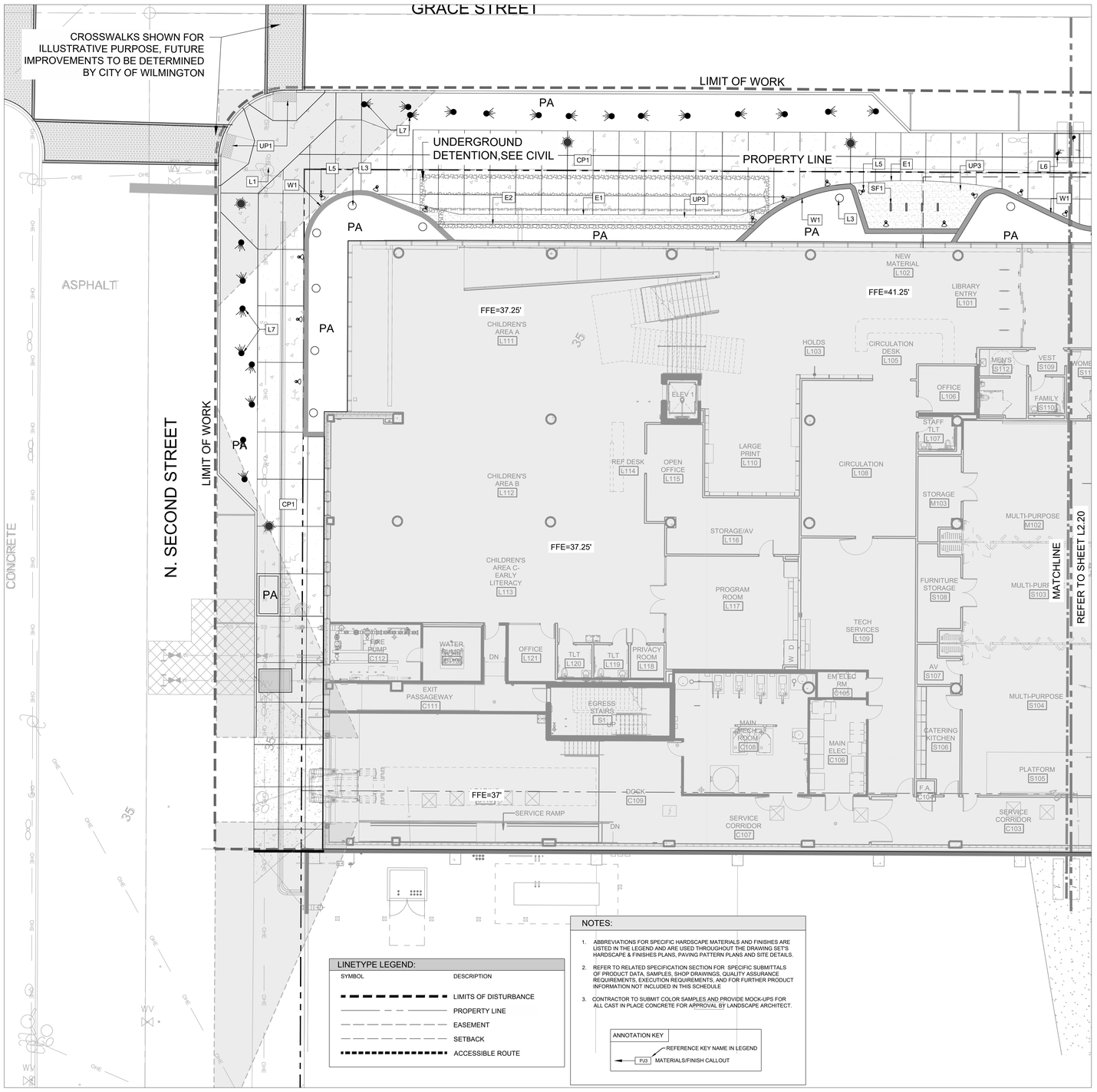

LINETYPE LEGEND:

SYMBOL	DESCRIPTION
	LIMITS OF DISTURBANCE
	PROPERTY LINE
	EASEMENT
	SETBACK
	ACCESSIBLE ROUTE

NOTES:

1. ABBREVIATIONS FOR SPECIFIC HARDSCAPE MATERIALS AND FINISHES ARE LISTED IN THE LEGEND AND ARE USED THROUGHOUT THE DRAWING SETS HARDSCAPE & FINISHES PLANS, PAVING PATTERN PLANS AND SITE DETAILS.
2. REFER TO RELATED SPECIFICATION SECTION FOR SPECIFIC SUBMITTALS OF PRODUCT DATA, SAMPLES, SHOP DRAWINGS, QUALITY ASSURANCE REQUIREMENTS, EXECUTION REQUIREMENTS, AND FOR FURTHER PRODUCT INFORMATION NOT INCLUDED IN THIS SCHEDULE
3. CONTRACTOR TO SUBMIT COLOR SAMPLES AND PROVIDE MOCK-UPS FOR ALL CAST IN PLACE CONCRETE FOR APPROVAL BY LANDSCAPE ARCHITECT.

ANNOTATION KEY
REFERENCE KEY NAME IN LEGEND
PJ3 MATERIALS/FINISH CALLOUT

CP - CONCRETE PAVING

KEY NAME	DESCRIPTION	DETAIL REF	SPEC SECTION
CP1	CONCRETE PAVING-PEDESTRIAN	1/L3.91	32 13 13

UP - UNIT PAVING

KEY NAME	DESCRIPTION	DETAIL REF	SPEC SECTION
UP1	DETECTABLE WARNING PAVERS	SEE CIVIL C5.00	32 14 00
UP3	DECOMPOSED GRANITE	4/L3.91	32 14 00

PJ - PAVING JOINTS

KEY NAME	DESCRIPTION	DETAIL REF	SPEC SECTION
PJ1	CONTROL JOINTS	2/L3.91	32 13 73
PJ2	EXPANSION JOINTS	2/L3.91	32 13 73

E - EDGING AND CURBS

KEY NAME	DESCRIPTION	DETAIL REF	SPEC SECTION
E1	METAL EDGINGS	5/L3.91	32 14 00
E2	VERTICAL GRANITE CURB	4/L3.90	32 13 13

W - WALLS

KEY NAME	DESCRIPTION	DETAIL REF	SPEC SECTION
W1	STONE PLANTER WALL	1/L3.92	

SF - SITE FURNISHINGS

KEY NAME	DESCRIPTION	DETAIL REF	SPEC SECTION
SF1	BIKE RACK	5/L3.92	12 93 00

L - LIGHTING

KEY NAME	DESCRIPTION	DETAIL REF	SPEC SECTION
L1	DUKE STREET LIGHT	PER CIVIL	PER CIVIL
L3	PATH LIGHT	6/SL0.03	
L5	WALL WASH LIGHT	3/SL0.03	
L6	TREE WELL LIGHT	4/SL0.03	
L7	LANDSCAPE LIGHT	5/SL0.03	

M - MISCELLANEOUS

KEY NAME	DESCRIPTION	DETAIL REF	SPEC SECTION
PA	PLANTING AREA	N/A	N/A

0 5 10 20
SCALE: 1"=10' NORTH

101 NORTH THIRD STREET, SUITE 500
WILMINGTON, NORTH CAROLINA 28401
TEL. 910.790.9901 FAX. 910.790.3111
WWW.LS3P.COM

2022.06.22

COPYRIGHT 2023 ALL RIGHTS RESERVED. PRINTED OR ELECTRONIC DRAWINGS AND DOCUMENTATION MAY NOT BE REPRODUCED IN ANY FORM WITHOUT WRITTEN PERMISSION FROM LS3P ASSOCIATES LTD.

Project Grace

Grace Street
Wilmington, NC 28401

LS3P PROJECT: 7701-177600

Δ	DATE	DESCRIPTION
0	2023.05.22	PERMIT SET
1	2023.06.22	ADDENDUM #2

SHEET NAME:
MATERIALS & FINISH PLAN

ORIG SUBMISSION: ~~2022.05.25~~

SHEET:
L2.10
PERMIT SET

7/11/2022 10:44:41 AM

THE ORIGINAL SHEET SIZE OF THIS DRAWING IS 24"X36". REDUCTIONS AT THIS SHEET'S ORIGINAL PAGE SIZE

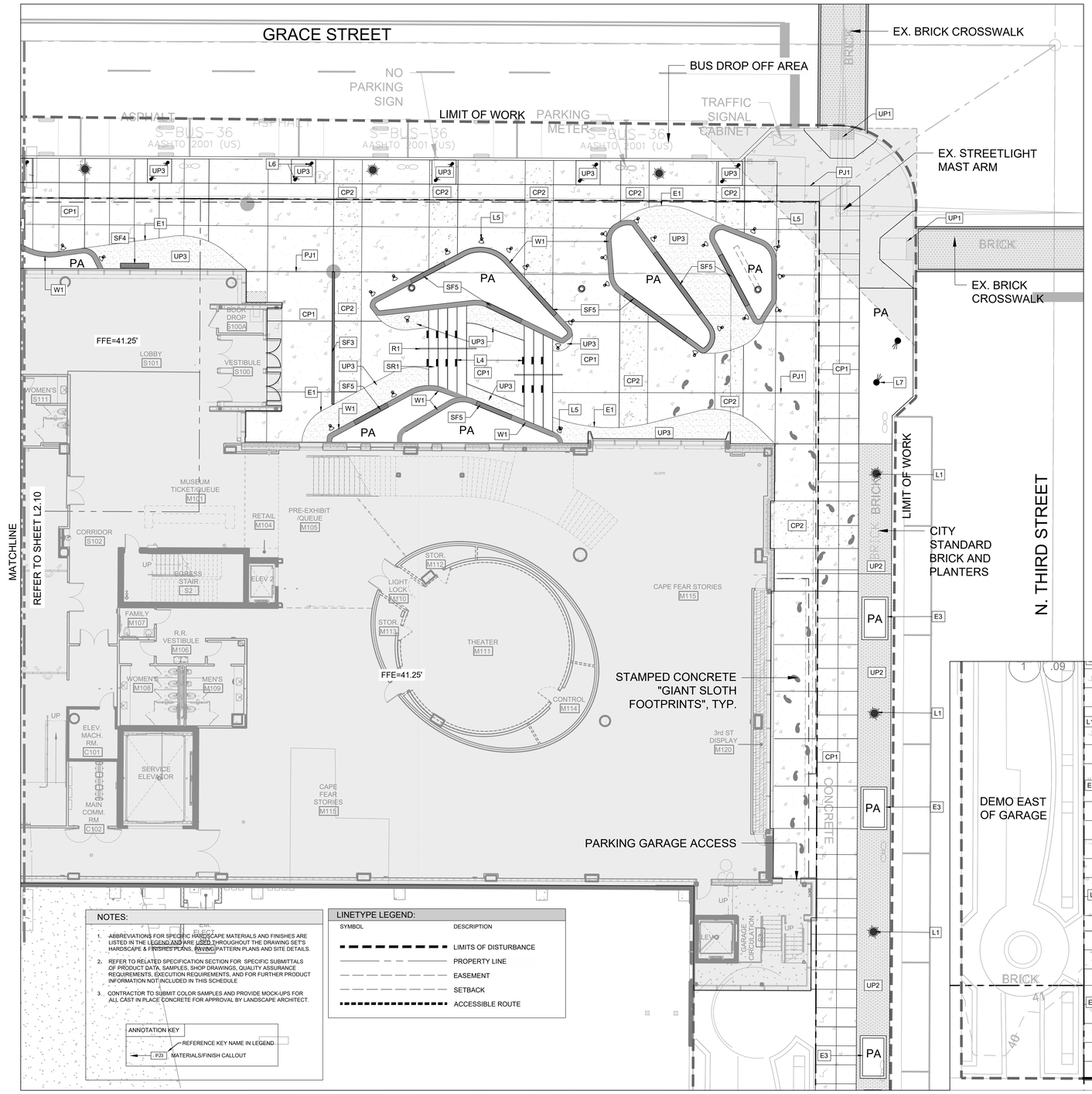

NOTES:

1. ABBREVIATIONS FOR SPECIFIC HARDSCAPE MATERIALS AND FINISHES ARE LISTED IN THE LEGEND AND ARE USED THROUGHOUT THE DRAWING SET'S HARDSCAPE & FINISHES PLANS, PAVING PATTERN PLANS AND SITE DETAILS.
2. REFER TO RELATED SPECIFICATION SECTION FOR SPECIFIC SUBMITTALS OF PRODUCT DATA, SAMPLES, SHOP DRAWINGS, QUALITY ASSURANCE REQUIREMENTS, EXECUTION REQUIREMENTS, AND FOR FURTHER PRODUCT INFORMATION NOT INCLUDED IN THIS SCHEDULE
3. CONTRACTOR TO SUBMIT COLOR SAMPLES AND PROVIDE MOCK-UPS FOR ALL CAST IN PLACE CONCRETE FOR APPROVAL BY LANDSCAPE ARCHITECT.

ANNOTATION KEY

REFERENCE KEY NAME IN LEGEND

PJ3 MATERIALS/FINISH CALLOUT

LINETYPE LEGEND:

SYMBOL	DESCRIPTION
	LIMITS OF DISTURBANCE
	PROPERTY LINE
	EASEMENT
	SETBACK
	ACCESSIBLE ROUTE

CP - CONCRETE PAVING

KEY NAME	DESCRIPTION	DETAIL REF	SPEC SECTION
CP1	CONCRETE PAVING-PEDESTRIAN	1/L3.91	32 13 13
CP2	CONCRETE PAVING (TABBY FINISH)-PEDESTRIAN	1/L3.91	32 13 13

UP - UNIT PAVING

KEY NAME	DESCRIPTION	DETAIL REF	SPEC SECTION
UP1	DETECTABLE WARNING PAVERS	SEE CIVIL C5.00	32 14 00
UP2	SPECIAL UNIT PAVER-PEDESTRIAN	5/L3.90	32 14 00
UP3	DECOMPOSED GRANITE	4/L3.91	32 14 00

PJ - PAVING JOINTS

KEY NAME	DESCRIPTION	DETAIL REF	SPEC SECTION
PJ1	CONTROL JOINTS	2/L3.91	32 13 73
PJ2	EXPANSION JOINTS	2/L3.91	32 13 73

E - EDGING AND CURBS

KEY NAME	DESCRIPTION	DETAIL REF	SPEC SECTION
E1	METAL EDGINGS	5/L3.91	32 14 00
E3	VERTICAL CONCRETE CURB	4/L3.90	32 13 13

SR - STAIRS AND RAMPS

KEY NAME	DESCRIPTION	DETAIL REF	SPEC SECTION
SR1	CONCRETE STAIR	7/L3.91	03 30 00

W - WALLS

KEY NAME	DESCRIPTION	DETAIL REF	SPEC SECTION
W1	STONE PLANTER WALL	1/L3.92	

R - RAILS

KEY NAME	DESCRIPTION	DETAIL REF	SPEC SECTION
R1	METAL HANDRAIL	8/L3.91	05 73 01

SF - SITE FURNISHINGS

KEY NAME	DESCRIPTION	DETAIL REF	SPEC SECTION
SF2	LITTER RECEPTACLE	9/L9.90	12 93 00
SF3	TRENCH DRAIN	4/L9.90	12 93 00
SF4	BENCH	1/L9.90	12 93 00
SF5	STONE WALL BENCH SEAT	2/L3.92	

L - LIGHTING

KEY NAME	DESCRIPTION	DETAIL REF	SPEC SECTION
L1	DUKE STREET LIGHT	PER CIVIL	PER CIVIL
L2	PEDESTRIAN AREA STREET LIGHT	1/SL0.03	
L3	PATH LIGHT	6/SL0.03	
L4	STEP LIGHT	2/SL0.03	
L5	WALL WASH LIGHT	3/SL0.03	
L6	TREE WELL LIGHT	4/SL0.03	
L7	LANDSCAPE LIGHT	5/SL0.03	

M - MISCELLANEOUS

KEY NAME	DESCRIPTION	DETAIL REF	SPEC SECTION
PA	PLANTING AREA	N/A	N/A

SCALE: 1"=10' NORTH

NEW HANOVER COUNTY • NORTH CAROLINA ESTABLISHED 1729
CapeFear Commercial
LS3P
101 NORTH THIRD STREET, SUITE 500
WILMINGTON, NORTH CAROLINA 28401
TEL. 910.790.9901 FAX. 910.790.3111
WWW.LS3P.COM
STEWART
NORTH CAROLINA REGISTERED LANDSCAPE ARCHITECT 1240 EDD N. DUNCAN
2022.06.22

COPYRIGHT 2023 ALL RIGHTS RESERVED. PRINTED OR ELECTRONIC DRAWINGS AND DOCUMENTATION MAY NOT BE REPRODUCED IN ANY FORM WITHOUT WRITTEN PERMISSION FROM LS3P ASSOCIATES LTD.

Project Grace

Grace Street
Wilmington, NC 28401

LS3P PROJECT: 7701-177600

Δ	DATE	DESCRIPTION
0	2023.05.22	PERMIT SET
1	2023.06.22	ADDENDUM #2

SHEET NAME:
MATERIALS & FINISH PLAN

ORIG SUBMISSION: ~~2022.05.25~~

SHEET: L2.20

PERMIT SET

7/11/2022 10:44:41 AM

THIS BORDER IS 1" LONG AT THIS SHEET'S ORIGINAL PAPER SIZE

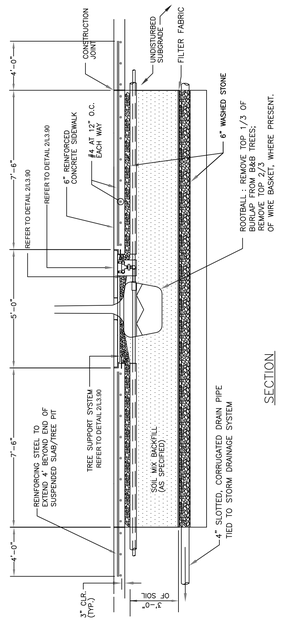

1 TREE PIT - SUSPENDED SIDEWALK NTS

CHAMELEON WAYS
NATURAL AGGREGATE BOUND SURFACES

CHAMELEON WAYS
188 JEFFERSON STREET
CENTER VALLEY, PA 18049
TOLL FREE: 1-877-426-5687
PHONE: (877) 426-5687
FAX: (610) 797-4654
www.chameleonways.com

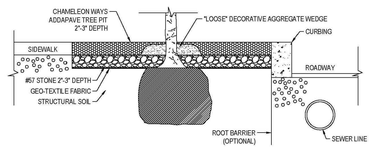

MANUFACTURER'S NOTES:
- A SUITABLE STEEL, WOOD, BRICK, STONE OR ALUMINUM EDGING SHOULD BE PROVIDED TO ENSURE A NEAT EDGE DETAIL.
- ANY ADVICE, RECOMMENDATION OR INFORMATION GIVEN BY CHAMELEON WAYS, INC IS BASED ON PRACTICAL EXPERIENCE AND IS BELIEVED TO BE ACCURATE AT THE TIME OF PUBLICATION, NO LIABILITY OR RESPONSIBILITY OF ANY KIND (INCLUDING LIABILITY FOR NEGLIGENCE) IS ACCEPTED IN THIS RESPECT BY THE COMPANY, ITS EMPLOYEES, OR APPLICATORS.
- IT IS RECOMMENDED THAT A CERTIFIED PROFESSIONAL ENGINEER DESIGN AND DEVELOP THE PROPER BASE STRUCTURE REQUIREMENTS TO SUPPORT THE EXPECTED LOADS AND TAKING INTO ACCOUNT THE CLIMATE AND SITE SPECIFIC CONDITIONS WHICH MAY EXIST.

NOTES:
1. INSTALLATION TO BE COMPLETED IN ACCORDANCE WITH MANUFACTURER'S SPECIFICATIONS.
2. DO NOT SCALE DRAWING.
3. THIS DRAWING IS INTENDED FOR USE BY ARCHITECTS, ENGINEERS, CONTRACTORS, CONSULTANTS AND DESIGN PROFESSIONALS FOR PLANNING PURPOSES ONLY. THIS DRAWING MAY NOT BE USED FOR CONSTRUCTION.
4. ALL INFORMATION CONTAINED HEREIN WAS CURRENT AT THE TIME OF DEVELOPMENT BUT MUST BE REVIEWED AND APPROVED BY THE PRODUCT MANUFACTURER TO BE CONSIDERED ACCURATE.
5. CONTRACTOR'S NOTE: FOR PRODUCT AND COMPANY INFORMATION VISIT www.CADdetails.com/info AND ENTER REFERENCE NUMBER 1137-009.

ADDAPAVE TREE PIT SYSTEM
ADDAPAVE TREE PIT SYSTEM

1137-009 REVISION DATE 16/02/2022
PROTECTED BY COPYRIGHT ©2021 CADDETAILS.COM LTD.
CADdetails.com

2 TREE PIT - ADDAPAVE SYSTEM NTS

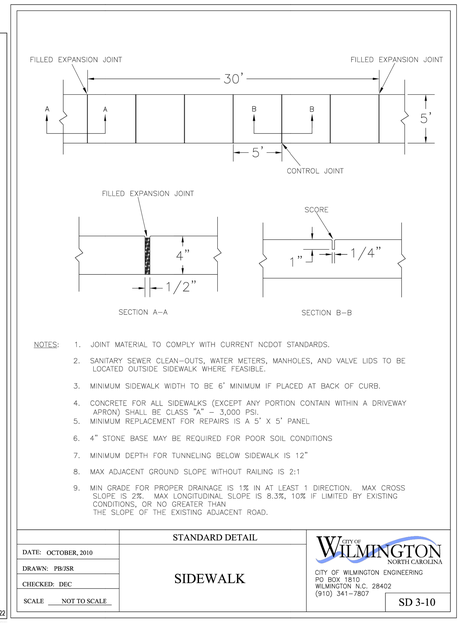

NOTES:
1. JOINT MATERIAL TO COMPLY WITH CURRENT NCDOT STANDARDS.
2. SANITARY SEWER CLEAN-OUTS, WATER METERS, MANHOLES, AND VALVE LIDS TO BE LOCATED OUTSIDE SIDEWALK WHERE FEASIBLE.
3. MINIMUM SIDEWALK WIDTH TO BE 6' MINIMUM IF PLACED AT BACK OF CURB.
4. CONCRETE FOR ALL SIDEWALKS (EXCEPT ANY PORTION CONTAIN WITHIN A DRIVEWAY APRON) SHALL BE CLASS "A" - 3,000 PSI.
5. MINIMUM REPLACEMENT FOR REPAIRS IS A 5' X 5' PANEL
6. 4" STONE BASE MAY BE REQUIRED FOR POOR SOIL CONDITIONS
7. MINIMUM DEPTH FOR TUNNELING BELOW SIDEWALK IS 12"
8. MAX ADJACENT GROUND SLOPE WITHOUT RAILING IS 2:1
9. MIN GRADE FOR PROPER DRAINAGE IS 1% IN AT LEAST 1 DIRECTION. MAX CROSS SLOPE IS 2%. MAX LONGITUDINAL SLOPE IS 8.3%, 10% IF LIMITED BY EXISTING CONDITIONS, OR NO GREATER THAN THE SLOPE OF THE EXISTING ADJACENT ROAD.

	STANDARD DETAIL	
DATE: OCTOBER, 2010	SIDEWALK	CITY OF WILMINGTON NORTH CAROLINA CITY OF WILMINGTON ENGINEERING PO BOX 1810 WILMINGTON N.C. 28402 (910) 341-7807
DRAWN: PB/JSR		
CHECKED: DEC		
SCALE NOT TO SCALE		SD 3-10

3 SIDEWALK NTS

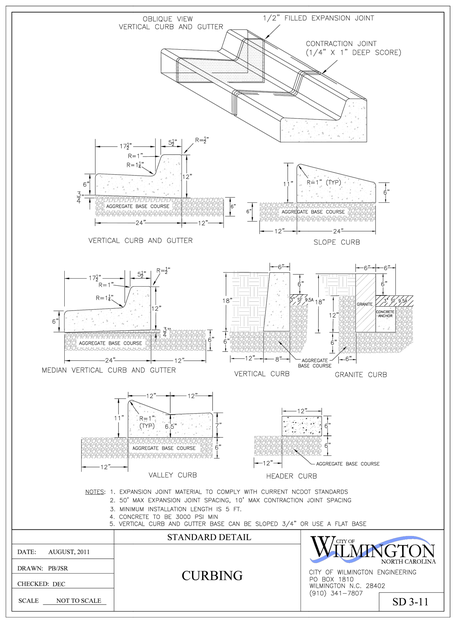

NOTES:
1. EXPANSION JOINT MATERIAL TO COMPLY WITH CURRENT NCDOT STANDARDS
2. 50' MAX EXPANSION JOINT SPACING, 10' MAX CONTRACTION JOINT SPACING
3. MINIMUM INSTALLATION LENGTH IS 5 FT.
4. CONCRETE TO BE 3000 PSI MIN
5. VERTICAL CURB AND GUTTER BASE CAN BE SLOPED 3/4" OR USE A FLAT BASE

	STANDARD DETAIL	
DATE: AUGUST, 2011	CURBING	CITY OF WILMINGTON NORTH CAROLINA CITY OF WILMINGTON ENGINEERING PO BOX 1810 WILMINGTON, NC 28402 (910) 341-7807
DRAWN: PB/JSR		
CHECKED: DEC		
SCALE NOT TO SCALE		SD 3-11

4 CURBING NTS

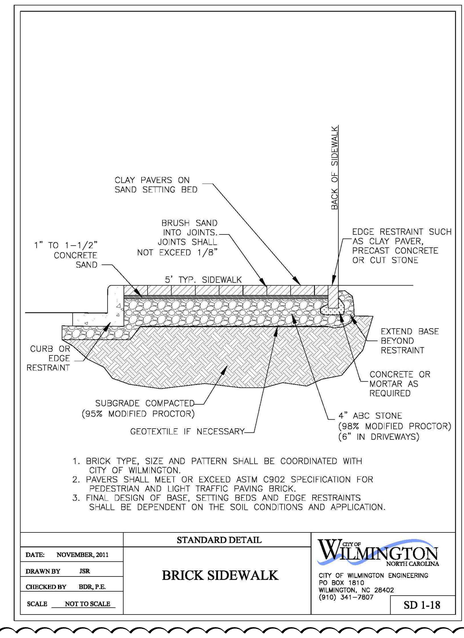

1. BRICK TYPE, SIZE AND PATTERN SHALL BE COORDINATED WITH CITY OF WILMINGTON.
2. PAVERS SHALL MEET OR EXCEED ASTM C902 SPECIFICATION FOR PEDESTRIAN AND LIGHT TRAFFIC PAVING BRICK.
3. FINAL DESIGN OF BASE, SETTING BEDS AND EDGE RESTRAINTS SHALL BE DEPENDENT ON THE SOIL CONDITIONS AND APPLICATION.

	STANDARD DETAIL	
DATE: NOVEMBER, 2011	BRICK SIDEWALK	CITY OF WILMINGTON NORTH CAROLINA CITY OF WILMINGTON ENGINEERING PO BOX 1810 WILMINGTON, NC 28402 (910) 341-7807
DRAWN BY JSR		
CHECKED BY BDR, P.E.		
SCALE NOT TO SCALE		SD 1-18

1

5 BRICK SIDEWALK NTS

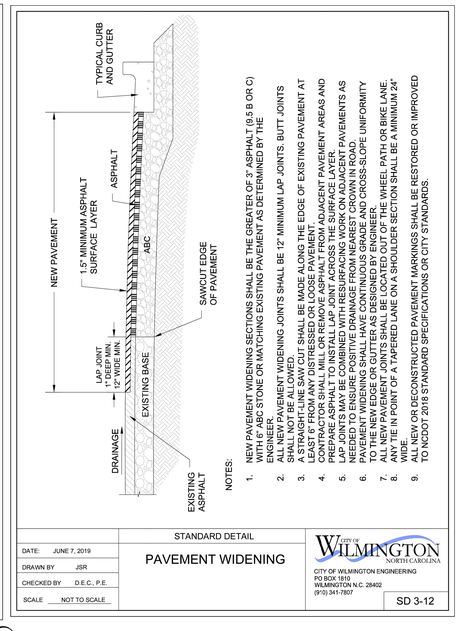

NOTES:
1. NEW PAVEMENT WIDENING SECTIONS SHALL BE THE GREATER OF 3" ASPHALT (0.5 B OR C) AND 6" ABC STONE OR MATCHING EXISTING PAVEMENT AS DETERMINED BY THE ENGINEER.
2. ALL NEW PAVEMENT WIDENING JOINTS SHALL BE 12" MINIMUM LAP JOINTS. BUTT JOINTS SHALL NOT BE ALLOWED.
3. STRAIGHT EDGE SAWCUT SHALL BE MADE ALONG THE EDGE OF EXISTING PAVEMENT AT LEAST 6" FROM ANY DISTRESSED OR LOOSE PAVEMENT.
4. CONTRACTOR SHALL MILL OR REMOVE ASPHALT FROM ADJACENT PAVEMENT AREAS AND PREPARE ASPHALT TO INSTALL LAP JOINT ACROSS THE SURFACE LAYER.
5. FOR ALL ROADWAY PAVEMENT WIDENING, THE EXISTING ROADWAY PAVEMENTS AS NEEDED TO ENSURE POSITIVE DRAINAGE FROM NEAREST CROWN IN ROAD.
6. PAVEMENT WIDENING SHALL HAVE CONTINUOUS GRADE AND CROSS-SLOPE UNIFORMITY TO THE NEW EDGE OF GUTTER AS DESIGNED BY ENGINEER.
7. ALL NEW PAVEMENT WIDENING SHALL BE CONSTRUCTED UNDER WHEEL PATH OR BIKE LANE.
8. ANY TIE IN POINT OF A TAPERED LANE ON A SHOULDER SECTION SHALL BE A MINIMUM 24' WIDE
9. ALL NEW OR DECONSTRUCTED PAVEMENT MARKINGS SHALL BE RESTORED OR IMPROVED TO NCDOT 2018 STANDARD SPECIFICATIONS OR CITY STANDARDS.

	STANDARD DETAIL	
DATE: JUNE 7, 2019	PAVEMENT WIDENING	CITY OF WILMINGTON NORTH CAROLINA CITY OF WILMINGTON ENGINEERING PO BOX 1810 WILMINGTON N.C. 28402 (910) 341-7807
DRAWN BY JSR		
CHECKED BY D.E.C., P.E.		
SCALE NOT TO SCALE		SD 3-12

6 PAVEMENT WIDENING NTS

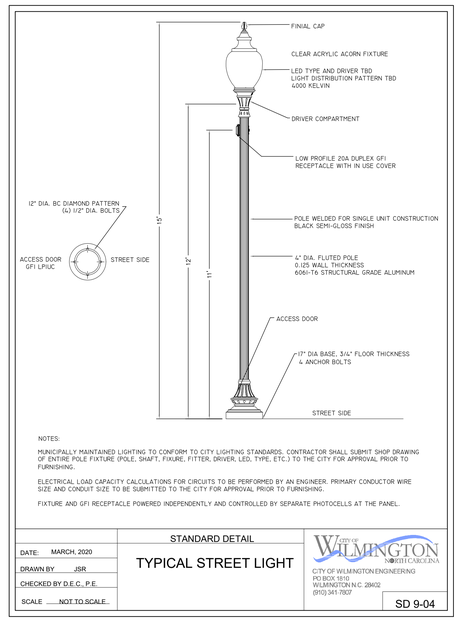

NOTES:
MUNICIPALLY MAINTAINED LIGHTING TO CONFORM TO CITY LIGHTING STANDARDS. CONTRACTOR SHALL SUBMIT SHOP DRAWING OF ENTIRE POLE FIXTURE (POLE, SHAFT, FIXURE, FITTER, DRIVER, LED, TYPE, ETC.) TO THE CITY FOR APPROVAL PRIOR TO FURNISHING.

ELECTRICAL LOAD CAPACITY CALCULATIONS FOR CIRCUITS TO BE PERFORMED BY AN ENGINEER. PRIMARY CONDUCTOR WIRE SIZE AND CONDUIT SIZE TO BE SUBMITTED TO THE CITY FOR APPROVAL PRIOR TO FURNISHING.

FIXTURE AND GFI RECEPTACLE POWERED INDEPENDENTLY AND CONTROLLED BY SEPARATE PHOTOCELLS AT THE PANEL.

	STANDARD DETAIL	
DATE: MARCH, 2020	TYPICAL STREET LIGHT	CITY OF WILMINGTON NORTH CAROLINA CITY OF WILMINGTON ENGINEERING PO BOX 1810 WILMINGTON N.C. 28402 (910) 341-7807
DRAWN BY JSR		
CHECKED BY D.E.C., P.E.		
SCALE NOT TO SCALE		SD 9-04

7 TYPICAL STREET LIGHT NTS

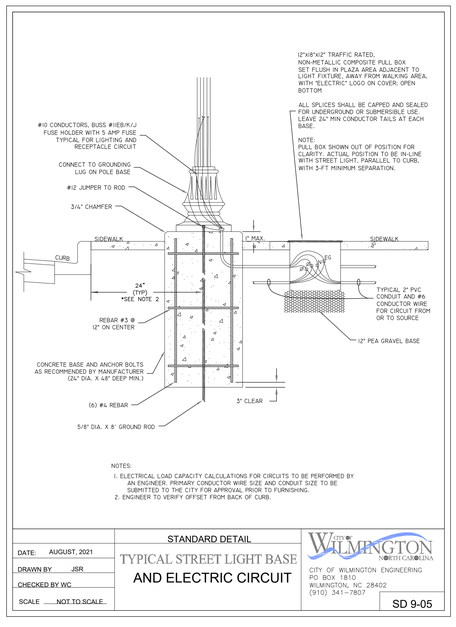

NOTES:
1. ELECTRICAL LOAD CAPACITY CALCULATIONS FOR CIRCUITS TO BE PERFORMED BY AN ENGINEER. PRIMARY CONDUCTOR WIRE SIZE AND CONDUIT SIZE TO BE SUBMITTED TO THE CITY FOR APPROVAL PRIOR TO FURNISHING.
2. ENGINEER TO VERIFY OFFSET FROM BACK OF CURB.

	STANDARD DETAIL	
DATE: AUGUST, 2021	TYPICAL STREET LIGHT BASE AND ELECTRIC CIRCUIT	CITY OF WILMINGTON NORTH CAROLINA CITY OF WILMINGTON ENGINEERING PO BOX 1810 WILMINGTON, NC 28402 (910) 341-7807
DRAWN BY JSR		
CHECKED BY WC		
SCALE NOT TO SCALE		SD 9-05

8 TYPICAL STREET LIGHT BASE NTS

NEW HANOVER COUNTY • NORTH CAROLINA ESTABLISHED 1729
CapeFear Commercial
LS3P
101 NORTH THIRD STREET, SUITE 500
WILMINGTON, NORTH CAROLINA 28401
TEL. 910.790.9901 FAX. 910.790.3111
WWW.LS3P.COM
STEWART
NORTH CAROLINA REGISTERED LANDSCAPE ARCHITECT 1240 EDDIE A. DUNCAN
2022.06.22

COPYRIGHT 2023 ALL RIGHTS RESERVED. PRINTED OR ELECTRONIC DRAWINGS AND DOCUMENTATION MAY NOT BE REPRODUCED IN ANY FORM WITHOUT WRITTEN PERMISSION FROM LS3P ASSOCIATES LTD.

Project Grace
Grace Street
Wilmington, NC 28401
LS3P PROJECT: 7701-177600

Δ	DATE	DESCRIPTION
0	2023.05.22	PERMIT SET
1	2023.06.22	ADDENDUM #2

SCALE: AS NOTED

SHEET NAME:
SITE DETAILS I

ORIG SUBMISSION: ~~2022.05.25~~

SHEET:
L3.90
PERMIT SET

7/11/2022 10:44:41 AM

THE LINE SHOWN ABOVE IS EXACTLY ONE INCH LONG ON ARCH E SHEETS ORIGINAL PAGE SIZE

PROJECT GRACE

STRUCTURAL CONSTRUCTION DOCUMENTS

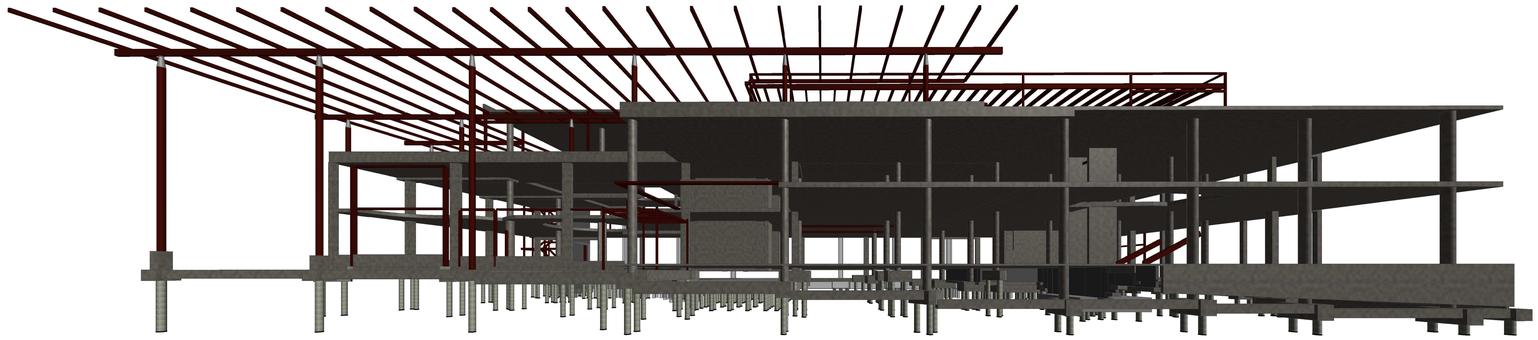

GRACE STREET VIEW

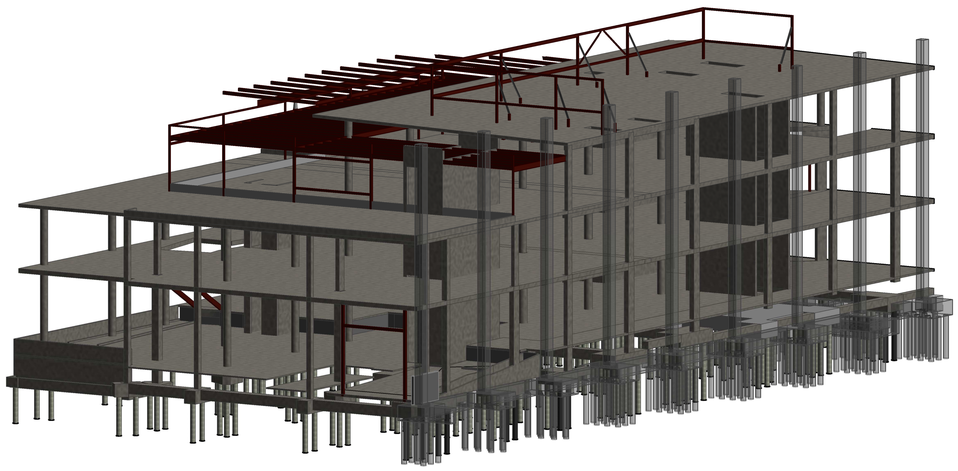

2nd STREET VIEW

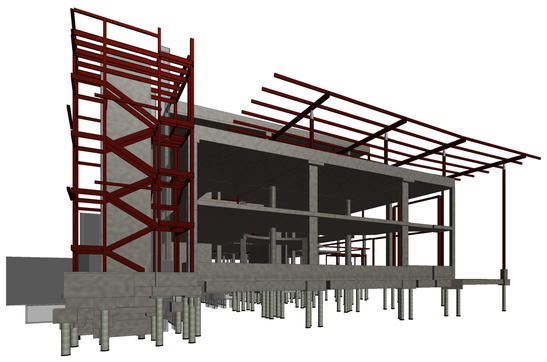

3rd STREET VIEW

STRUCTURAL SHEET LIST

Sheet Number	Sheet Name	Current Revision	Current Revision Date
S-100	COVER SHEET	2	2023.06.22
S-101	GENERAL NOTES	2	2023.06.22
S-102	GENERAL NOTES	0	2023.05.22
S-103	TYPICAL DETAILS	0	2023.05.22
S-200A	FOUNDATION PLAN - AREA A	2	2023.06.22
S-200B	FOUNDATION PLAN - AREA B	2	2023.06.22
S-201 EOS	LEVEL 1/1 & LEVEL 1 EDGE OF SLAB PLAN	0	2023.05.22
S-201A	SLAB ON GRADE PLAN - AREA A	2	2023.06.22
S-201B	SLAB ON GRADE PLAN - AREA B	2	2023.06.22
S-202 EOS	SECOND FLOOR EDGE OF SLAB PLAN	2	2023.06.22
S-202A	SECOND FLOOR FRAMING PLAN - AREA A	0	2023.05.22
S-202B	SECOND FLOOR FRAMING PLAN - AREA B	2	2023.06.22
S-202A PT	2nd FLOOR PT SLAB PLAN - AREA A	0	2023.05.22
S-202B PT	2nd FLOOR PT SLAB PLAN - AREA B	0	2023.05.22
S-203 EOS	THIRD FLOOR EDGE OF SLAB PLAN	0	2023.05.22
S-203A	THIRD FLOOR FRAMING PLAN - AREA A	2	2023.06.22
S-203B	THIRD FLOOR FRAMING PLAN - AREA B	2	2023.06.22
S-203A PT	3rd FLOOR PT SLAB PLAN - AREA A	0	2023.05.22
S-203B PT	3rd FLOOR PT SLAB PLAN - AREA B	0	2023.05.22
S-204	SOLAR ARRAY SUPPORT FRAMING PLAN	0	2023.05.22
S-205	LOW ROOF FRAMING PLAN	2	2023.06.22
S-206 EOS	HIGH ROOF EDGE OF SLAB PLAN	0	2023.05.22
S-206	HIGH ROOF FRAMING PLAN	2	2023.06.22
S-206 PT	ROOF PT SLAB PLAN	2	2023.06.22
S-207	DESIGN LIVE LOAD PLANS AND EXHIBIT ANCHORAGE DETAILS	2	2023.06.22
S-208	MONUMENTAL STAIR PLANS, SECTIONS & DETAILS	2	2023.06.22
S-209	EXISTING PARKING GARAGE MODIFICATIONS	0	2023.05.22
S-210	STAIR TOWER PLANS, SECTIONS	0	2023.05.22
S-211	STAIR TOWER FRAMING PLANS	2	2023.06.22
S-301	AUGER CAST PILE DETAILS	0	2023.05.22
S-302	GRAVITY PILE CAP PLANS	2	2023.06.22
S-303	LATERAL PILE CAP PLANS	0	2023.05.22
S-304	FOUNDATION SECTIONS & DETAILS	0	2023.05.22
S-305	FOUNDATION SECTIONS & DETAILS	2	2023.06.22
S-306	FOUNDATION SECTIONS & DETAILS	0	2023.05.22
S-401	FRAMING SECTIONS & DETAILS	0	2023.05.22
S-402	FRAMING SECTIONS & DETAILS	2	2023.06.22
S-403	FRAMING SECTIONS & DETAILS	2	2023.06.22
S-404	FRAMING SECTIONS & DETAILS	2	2023.06.22
S-405	FRAMING ELEVATIONS	2	2023.06.22
S-500	SHEAR WALL LOCATION PLAN	0	2023.05.22
S-501	CONCRETE SHEAR WALLS	2	2023.06.22
S-601	COLUMN SCHEDULES	0	2023.05.22
S-602	COLUMN AND STUD RAIL DETAILS	0	2023.05.22
S-603	CONCRETE BEAM DETAILS	0	2023.05.22
S-701	TYPICAL PT DETAILS - WALL TO SLAB CONNECTION	0	2023.05.22
S-702	TYPICAL PT DETAILS	0	2023.05.22

TRUE NORTH PROJECT NORTH

101 NORTH THIRD STREET, SUITE 500
WILMINGTON, NORTH CAROLINA 28401
TEL. 910.790.3111 FAX. 910.790.9901
WWW.LS3P.COM

WOODS ENGINEERING
Consulting Structural Engineers
254 North Front Street Phone: 910.343.8007
Suite 201 Fax: 910.343.8088
Wilmington, N.C. 28401 www.woodseng.com

WOODS ENGINEERING, P.A. CORPORATE SEAL No. C-1806 NORTH CAROLINA

NORTH CAROLINA PROFESSIONAL ENGINEER SEAL 19475 RON R. WOODS

COPYRIGHT 2023 ALL RIGHTS RESERVED. PRINTED OR ELECTRONIC DRAWINGS AND DOCUMENTATION MAY NOT BE REPRODUCED IN ANY FORM WITHOUT WRITTEN PERMISSION FROM LS3P ASSOCIATES LTD.

Project Grace

Grace Street
Wilmington, NC 28401

LS3P PROJECT: 7701-177600
WOODS PROJECT: 21-3351

Δ	DATE	DESCRIPTION
0	2023.05.22	PERMIT SET
2	2023.06.22	ADDENDUM #2

SHEET NAME:
COVER SHEET

ORIG SUBMISSION: 2023.05.22

SHEET: S-100

PERMIT SET

6/21/2023 11:37:41 AM

THE LINE SHOWN ABOVE IS EXACTLY ONE INCH LONG ON ORIGINAL PAGE SIZE

1.0 CODES AND STANDARDS:

1.1 "2018 North Carolina State Building Code" and "International Building Code", 2015.

1.2 "Minimum Design Loads for Buildings and other Structures" SEI/ASCE 7-16.

1.3 "Building Code Requirements for Structural Concrete (ACI 318-14)" American Concrete Institute 2014.

1.4 "Manual of Standard Practice", Concrete Reinforcing Steel Institute, latest edition.

1.5 "Specification for Structural Steel Buildings (AISC 360-10)" American Institute of Steel Construction, 2011 - 14th Edition

1.6 "Structural Welding Code - Steel (AWS D1.1)" and "Structural Welding Code - Reinforcing Steel (AWS D1.4)", American Welding Society.

1.7 "Specification for the Design of Cold-Formed Steel Structural Members", American Iron and Steel Institute (AISI), S100-12.

1.8 "Building Code Requirements for Masonry Structures", ACI 530-13, ASCE 5-13, TMS 402-13.

1.9 "Standard Specifications for Joist Girders (JG-10)", "Standard Specifications for Open Web Steel Joists, K-Series (k-10)", "Standard Specifications for Long Span Steel Joist, LH Series and Deep Longspan Steel Joists, DLH Series (LH/DLH-1.1)", Steel Joist Institute

1.10 "Design Manual For Floor Decks and Roof Decks", Steel Deck Institute, latest edition.

2.0 DESIGN LOADS:
Project Located in: City of Wilmington, County of New Hanover, State of North Carolina.

2.1 Risk Category = III

2.2 Gravity Loads: (Reduced where allowed)

GRAVITY LIVE LOADS		
Location	Uniform (psf)	Concentrated (lbs) (Over 2.5'x2.5')
Roof Loads:		
Live Load	20	300
Floor Live Loads:		
Office	81	2000
Assembly	100	
Mechanical & Electrical Rooms	125	
Storage	125	
Stage Floors	150	
Reading Rooms	60	1000
Stack Rooms	150	1000
Corridors Above 1st Floor	80	1000
Museum Exhibit Areas	150	

2.3 Drifting Snow Loads per N.C. Building Code.

Pg = 10 psf
I = 1.1
Ce = 0.9
Ct = 1.0

2.4 Wind Loads per N.C. State Building Codes, 2018 edition (IBC 2015) & ASCE 7-16 (3-second gust)

Main Wind Force Resisting System:
Vult 154mph
Vasd 119.3mph
Exposure Category "C"

Building is enclosed & Internal Pressure coefficient (GCpi) = +0.18 & -0.18
Topographic Factor Kzt = 1.0
Wind Directionality Factor, Kd = 0.85

Calculated Wind Base Shear (Vult For MWFRS)
Vx = 613k Vy = 1278k

Components and Cladding:
Vult 154mph
Vasd 119.3mph
Exposure Category "C"

Components and Cladding Wind Pressure (psf)

Walls	Area = 10ft2		Area = 20ft2		Area = 50ft2		Area = 100ft2		Area = 500ft2	
Zone 4	69.2	-74.9	66.1	-71.9	61.9	-67.8	58.8	-64.7	58.8	-64.7
Zone 5	69.2	-92.5	66.1	-86.2	61.9	-78.0	58.8	-71.9	58.8	-71.9
Roof	Area = 10ft2		Area = 20ft2		Area = 50ft2		Area = 100ft2		Area = 500ft2	
Zone 1	28.0	-110.2	26.3	-102.9	24.1	-93.3	22.3	-86.1	22.3	-86.1
Zone 1'	28.0	-63.3	26.3	-63.3	24.1	-63.3	22.3	-63.3	22.3	-63.3
Zone 2	28.0	-145.8	26.3	-135.8	24.1	-123.5	22.3	-114.3	22.3	-114.3
Zone 3	28.0	-198.0	26.3	-179.4	24.1	-154.7	22.3	-135.8	22.3	-135.8

Notes:
1. Areas noted are effective wind areas as per ASCE 7-16, 26.2 definitions.
2. See figures below for Zone locations.
3. Plus and minus signs signify pressures acting toward and away from surfaces, respectively.
4. Design pressures shown in table are strength design wind pressures. Allowable stress design wind pressures may be calculated by factoring the pressures by 0.6.
5. Design pressures for effective wind areas between those noted in schedule may be interpolated.
6. Tributary area = greater of LxW or LxL/3.
7. Deflections may be calculated based on 42% of these loads.

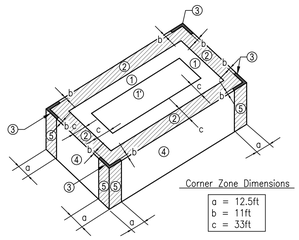

Corner Zone Dimensions

a = 12.5ft
b = 11ft
c = 33ft

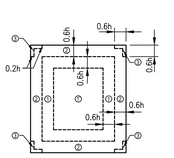

COMPONENT & CLADDING ROOF PRESSURES

Flat Roof

h = 55ft

2.5 Seismic Loads per 2018 North Carolina State Building Code (IBC 2015) & ASCE 7-16

Risk Category = III
Site class = "D" (Per Geotechnical Report)
Spectral Response Coefficients:
SS = 0.157g
S1 = 0.068g
SDS = 0.167g
SD1 = 0.11g
Cs = 0.0418

Seismic Design Category = "B"
Seismic Importance Factor = 1.25
Basic Seismic - Force - Resisting System
Bearing Wall System - Ordinary Reinforced Concrete Shear Walls

RX=RY=4.0, QX=QY=2.5, CDX=CDY=4.0
Design Base Shear Vx = 956k Vy = 1,029k
Building Height Limit = 160'
Analysis Procedure - 12.8.1 ASCE 7-16
Equivalent Lateral Force Procedure

2.6 Guardrail designed per North Carolina State Building Code, Section 1607.8

Guardrail:
Uniform load = 50 plf, any direction - per 1607.8.1
Concentrated load = 200 lbs, any direction - per 1607.8.1.1
Intermediate Rail: (all those except handrail) per 1607.8.1.2

2.7 Flood Loads:
Project is not located in a flood zone.

3.0 FOUNDATIONS:

3.1 Foundation design is based on geotechnical report #22.3116, addendum letter #1 #22:31167.A1 and addendum letter #2 22.31667.A2 by ECS Southeast, LLP Wilmington, NC dated December 13, 2021, April 1, 2022 and July 6, 2022, respectively. This report is available in the project manual. The recommendations contained in this report are herein made part of the requirements of these contract documents.

3.2 Foundation design is based on 16" diameter auger cast piles with an allowable compressive capacity of 90 tons, allowable uplift capacity of 22.5 tons and an allowable lateral capacity of 10 tons. The owner shall contract a Geotechnical Engineer to verify pile capacities and to set drilling criteria for installation. Pile load tests will be required as outlined in the Geotechnical Report. See sheet S-301 for Auger Cast Pile Specifications.

3.3 Top of footing (T/FTG) elevations are shown on the drawings or are to be determined by the Contractor in the field in accordance with the guidelines set forth in the drawings.

3.4 Bottom of exterior footings, grade beams and walls shall bear at a minimum depth of 1'-0" below final grade for frost protection.

3.5 Testing and Inspection:
a. All areas to have slabs on grade shall be proof rolled in accordance with and under observation of the Geotechnical Engineer and approved prior to preparation for concrete placement.
b. All foundation bearing strata shall be inspected and approved by the Geotechnical Engineer prior to any concrete placement.
c. Geotechnical Engineer shall be the sole judge as to suitability of all foundation and/or slab bearing strata.
d. Footing bearing elevations shall be adjusted in the field as required to meet the design bearing pressures by additional excavation or compaction and/or backfilling or by other means acceptable to the Geotechnical Engineer.

3.6 Undercutting to remove existing fill beneath footings and slab shall be performed at the direction of the Geotechnical Engineer.

3.7 Engineered Fill: All fill material shall be selected in accordance with the Geotechnical Report Material shall be a clean, low plastic soil with a plasticity index less than 30 (less than 15 is preferred), liquid limit less than 50, and unit weight of 120 pcf (+ 5 pcf)

3.8 Compaction: All fill shall be placed in loose lifts not exceeding 8 inches in thickness and compacted to a minimum of 96 percent Standard Proctor (ASTM D-698) except that the top 12 inches shall be compacted to a minimum of 98 percent Standard Proctor. Moisture shall be controlled to within 3 percent above or below optimum content.

3.9 Remove all topsoil and organic materials. The stripping should extend at least 10' beyond the proposed construction limits.

3.10 Contractor shall review all construction considerations as outlined in the Geotechnical report and bid accordingly.

4.0 CONCRETE:

4.1 Concrete Strength:
All concrete shall be in accordance with the American Concrete Institute (ACI) 301 and 318.

4.2 Concrete shall have a 28 day compressive strength and density as follows:
a. Footings, Pile Caps, Grade Beams, and Interior Slab-on-grade.....3,000psi, Density = ±145pcf
b. Elevated Slab, Columns and Walls.....5,000psi, Density = ±145pcf
c. Exterior Slab on Grade.....4,000psi, Density = ±145pcf
d. CMU Grout Fill.....3,000psi pea gravel mix Density = ±145pcf,
Slump 8"-11" or grout per Structural Masonry Notes, this sheet.

4.3 Concrete Mix Designs:
a. Submittals: Submit written reports of each proposed concrete mix not less than 15 days prior to the start of work.
b. Mix designs, including water, cement ratios and slumps, shall be prepared in accordance with ACI 301-05, Section 4, Cement shall conform to ASTM C 150 Type 1 or at contractor's option, ASTM C 595 Type IP where fly ash is permitted. Normal weight aggregate shall conform to ASTM C 33 and light weight aggregate shall conform to ASTM C 330. No admixtures containing calcium chloride shall be permitted in any concrete.
c. Aggregate size shall be #67 stone for supported slabs or other formed concrete elements; #57 stone for slabs on grade and footings or other concrete elements formed from and poured against earth; #89 stone for masonry grout.
d. Water reducing admixture shall be used in all concrete.
e. Air entraining admixture in accordance with ACI 301 shall be used in all concrete exposed freezing and thawing during construction or service conditions.
f. Concrete subjected to freezing/thawing shall have a maximum water/cement ratio of 0.45 and shall contain the amount of air entraining agent specified in ACI 301-05 Section 4.

4.4 Curing:
See specifications for curing method options and apply within two (2) hours after completion of finishing to all concrete flatwork and walls, U.N.O., other than footings and grade beams.

4.5 Use a non-corrosive, non-chloride accelerating admixture in concrete exposed to temperatures below 40 degrees. Uniformly heat the water and aggregates to a temperature of not less than 50 degrees. Place and cure concrete in accordance with ACI 306.

4.6 When hot weather conditions exist, place and cure concrete in accordance with ACI 301. Cool ingredients before mixing to maintain concrete temp. at time of placement below 90 degrees.

4.7 Reinforcing in all abutting concrete, including footings shall be continuous through or around all corners or intersections. Dowels or splices shall be equal in size and spacing to the reinforcing in the abutting members.

4.8 Refer to architectural drawings for door and window openings, drips, reglets, washes, masonry anchors, brick ledge elevations, slab depressions and miscellaneous embedded plates, bolts, anchors, angles, etc.

4.9 Refer to plumbing, mechanical and electrical drawings for underfloor, perimeter and other drains and for sleeves, outlet boxes, conduit, anchors, etc. The various trades are responsible for their items.

4.10 Base plates, anchor rods, support angles and other steel exposed to earth or granular fill shall be covered with a minimum of 3" of concrete.

4.11 Fill slabs, not shown on the structural drawings and all exterior slabs to be broom finished, shall be reinforced with a minimum of 6 x 6 x W2.0 x W2.0 WWM unless noted otherwise on other drawings.

4.12 Finish surfaces to the following tolerances, according to ASTM E 1155, for a randomly trafficked floor surface:
a. Specified overall values of flatness, F(F) 35; and of levelness, F(L) 25; with minimum local values equal to ½ of the overall flatness and levelness values.
b. The composite F(F) and F(L) numbers shall be measured and reported within 72 hours after completion of slab concrete finishing operations and before removal of any supporting shores.

4.13 Non-shrink grout shall be pre-mixed, non-corrosive, non-metallic, non-staining containing silica sands, Portland cement, shrinkage compensating and water reducing agents. Product shall only require the addition of water. Minimum compressive strength shall be 2500 psi after one day and 7000 psi after 28 days. Grout shall be free of gas producing or air releasing and oxidizing agents and contain no corrosive iron, aluminum or gypsum.

4.14 Provide concrete grout - not mortar - for reinforced masonry lintel and bond beams where indicated on drawing or as scheduled.

4.15 Tolerance for anchor rods and other embedded items shall be per the AISC Code of Standard Practice Section 7.5.

4.16 Unless otherwise shown in the architectural drawings, provide 3/4-inch chamfers at all column, wall, slab or beam edges that are exposed to view in the finished structure.

4.17 Concrete cover for cast-in-place concrete reinforcement:
Concrete cast against & permanently exposed to earth:.....3 Inches
Concrete exposed to earth or weather:
No. 6 through No. 18 Bars:.....2 Inches
No. 5 Bar and smaller:.....1½" Inches
Concrete not exposed to weather or in contact with ground:
Slabs, Walls, Joists:
No. 11 Bar and smaller:.....¾" Inches
Beams, Columns:
Primary Reinforcement, Ties, Stirrups:.....1½" Inches

5.0 REINFORCING STEEL:

5.1 Reinforcing shall be domestic new billet steel conforming to ASTM A615, Grade 60 or 60S including stirrups and ties, except that reinforcing which is required to be welded shall conform to ASTM A706.

5.2 Field bending of concrete reinforcing steel is not permitted.

5.3 Welded wire mat and fabric shall conform to ASTM A184 and A185 respectively and shall be provided in flat sheets. Welded wire mat/fabric shall be lapped 0'-6" at all splices.

5.4 Bar Splices:

	f'c = 3,000psi		f'c = 4,000psi		f'c = 5,000psi	
Bar Size	Ld (in)	Class "B" Lap Splice (in)	Ld (in)	Class "B" Lap Splice (in)	Ld (in)	Class "B" Lap Splice (in)
#3	17	22	15	19	13	17
#4	22	29	19	25	17	23
#5	28	36	24	31	22	28
#6	33	43	29	37	26	34
#7	48	63	42	54	38	49
#8	55	72	48	62	43	56
#9	62	81	54	70	48	63
#10	69	90	60	78	54	69
#11	76	98	66	85	59	76

1. Values are based on normal weight concrete.
2. Ld = minimum embed of rebar
3. Class "B" lap splice refers to minimum distance bars must be lapped for a full tension splice.

Notes:
For Epoxy Coated bars multiply table values by 1.2
For Beam Top Bars multiply table values by 1.3
For Top Bars in Slabs 13in and thicker multiply table values by 1.3

6.0 UNBONDED SINGLE STRAND TENDONS (POST-TENSIONING CABLES)

6.1 Post-Tensioning supplier shall design all anchorage zones per the current ACI code guidelines. Post-Tensioning supplier shall work with Woods Engineering, PE on all value engineering items.

6.2 Prestressing steel used is unbonded single strand post-tensioning tendons shall conform to the requirements set forth in the Specifications for Unbonded Single Strand Tendons (Latest Edition) published by the Post-Tensioning Institute (PTI). Strands shall be per ASTM A 416/A 416M, Grade 270 - low relaxation type, 0.5" diameter, strand area is 0.153 sq. in.

6.3 Relaxation losses for low-relaxation material shall be based on relaxation tests of representative samples for a period of not less than 1000 h, tested at 68 F ± 3.5 F (20 C ± 2 C) and stressed initially to not less than 70% of specified minimum breaking strength of strand. Tests shall be in accordance with ASTM A 416/A 416M and ASTM E 328.

6.4 Each strand pack or coil shall be clearly identified as to grade, coil and heat number. Identification shall be included in the fabrication process documentation.

6.5 Material shall be packaged in a manner that prevents physical damage to the strand during transportation and protects the material from deleterious corrosion during transit and storage. Any damage to strand sheathing need to be repaired w/ approved tape before concrete placement.

6.6 The Contractor shall submit installation drawings to the Engineer of Record a minimum four (4) weeks prior to scheduled installation of the tendons. Installation drawings shall show the tendon layout, all anchorage locations, and tendon supports with all details necessary to ensure proper installation. The review of the installation drawings by the Engineer of Records is only for general compliance with the intend of the structural drawings and specifications. In addition the Contractor shall provide long term calculations and anticipated field elongations at stressing along with field procedure for measuring elongations. Installation plans and calculations shall be sealed by a qualified Professional Engineer registered in the state of Tennessee. Electronic PDF format submittals are acceptable as long as they are signed and sealed.

6.7 Prestressing tendons shall be firmly supported at intervals not exceeding 4 ft. Tendons shall be attached to the supporting chairs or reinforcement w/out damaging the sheathing. Placing tolerances shall be in accordance with this section and ACI 117 (Latest edition), whichever is the most restrictive, unless stated otherwise in the Project specifications.

6.8 Vertical tolerances for tendon location shall not be more than ± 1/4" for concrete members with thickness equal or less than 8", ± 3/8" for concrete members with thickness larger than 8" but less than 2ft; and ± 1/2" for concrete members thicker than 2ft. Access shall be provided to stressing ends.

6.9 All dimensions showing the vertical location of the prestressing tendons are to the center of gravity of the tendons (CGS) unless noted otherwise.

6.10 Tendon placement shall be per this specification and as otherwise directed in the project Construction Documents. In two-way slab construction at least two (2) tendons shall be placed directly over the supporting columns (within the column cage) in each orthogonal direction per ACI 318 latest edition.

6.11 Lateral deviations in tendon location shall be permitted if necessary to avoid openings, ducts, chases, and inserts. Such deviations shall have a radius of curvature of not less than 480 strand diameters. As a minimum #3 hairpin reinforcement @ max. 12" o.c. shall be provided for all tighter lateral curvatures.

6.12 Opening, penetrations and insert locations shall be determined to the fullest extend possible prior to tendon layout and concrete placements. No changes shall be made in the field without prior written approval of the Engineer of Record. Core drilling is not allowed without prior written approval of the Engineer of Record.

6.13 Project is located in aggressive environment therefore post-tensioned system shall be of encapsulated type.

6.14 All exposed components shall be fully protected within 7 days after their exposure during installation. In corrosive environment this requirement shall be reduced to 1 day. Use temporary corrosion inhibitor on all exposed strand tails & anchors if tendons are not patched within 7 days of final stressing.

6.15 Post-tensioning system is designed and based on initial concrete strength at transfer (stressing) equal to 3,000 psi as indicated by compression tests of field-cured cylinders

6.16 General stressing sequence for two-way slabs shall be as follows:
a. Stress first all continuous distributed (uniform) tendons
b. Stress second all continuous banded tendons
c. Stress added distributed (uniforms) tendons
d. Stress added banded tendons

6.17 Contractor shall furnish to Engineer of Record calibration charts for every jack/gage/pump set to be used on project for stressing prior to any post-tensioning operations. Each jack shall be used only with the gage and pump for which it was calibrated.

6.18 Elongation measurements shall be made at each stressing location and submitted to the Engineer of Record for approval within max. 7 days of stressing. Measured elongations shall be within ± 7% from calculated elongations as per ACI 318-08 section 18.20. Elongations at construction joint need to be approved by Engineer or Record before pouring the remaining slab. Discrepancies exceeding ± 7% shall be resolved by the post-tensioning installer/supplier to the satisfaction of the Engineer of Record.

6.19 Upon elongation approval Contractor shall cut all strand tails, seal and patch all anchors within 1 business day. If delay is envisioned weather protection shall be installed on all anchors of uncut tendons.

7.0 STRUCTURAL MASONRY:

7.1 All structural masonry shall conform to ACI 530 standards as appropriate to the material.

7.2 Concrete Masonry Units (CMU):
a. Units shall be lightweight cellular units conforming to ASTM C 90, Grade N-2. Concrete masonry net area unit strength shall be no less than 2,000psi in accordance with ASTM C 140, with a unit weight not exceeding 95 pcf.
b. Design compressive strength of CMU (fm) = 2,000psi.

7.3 Mortar shall conform to ASTM C 270. Mortar shall be type "S" and shall conform to the ASTM C270 proportion requirements.

7.4 Neither type "N" mortar nor masonry cement shall be used as part of the lateral force resisting system.

7.5 Grouting:
a. Grout shall conform to ASTM C476 as specified by proportion. Masonry grout shall conform to the ASTM proportion requirements for coarse grout with a slump of 8 to 11 inches. Contractor may substitute grout with pea gravel concrete masonry fill, see note 4.2 this sheet.
b. All bond beams shall be filled with grout and reinforced as indicated on the drawings (details or schedules). Mortar fill is not permitted.
c. All masonry wall cells or cavities indicated as reinforced shall be grouted for the full height of the wall, unless specifically noted otherwise on the drawings. Unreinforced walls indicated as grouted shall be grouted full height, unless specifically noted otherwise. Mortar fill is not permitted.
d. All masonry cells or cavities below grade shall be grouted solid unless specifically noted otherwise on the drawings. Mortar fill is not permitted.
e. Vertical grouting shall be low lift or high lift as follows:
(1) Low lift grouting shall be used for all cavity walls and may be used for all walls at the option of the Contractor. Lifts shall not exceed 4'-0" in height.
(2) High lift grouting is permissible only for filling of cellular masonry units and shall not exceed 12'-8" in height. Clean out holes shall be provided at the base of each grouted cell.
f. Grouting shall be stopped 1-1/2" below the top of a course to form a key at the joint.
g. Grouting of masonry beams or lintels shall be done in one continuous operation.
h. Consolidate pours with mechanical vibrator and reconsolidate by mechanical vibration after initial water loss and settlement has occured.
i. Mechanical vibrator shall be a low velocity vibrator with a ¾" head.

7.6 Masonry Reinforcing:
a. Foundation dowels may slope a maximum of 1:6 to align with wall cavities or vertical CMU cores. Greater slopes will require replacement of the foundation dowels.
b. Spliced reinforcing shall be lapped a length calculated per IBC 2107.5 OR 15" OR as shown on drawings, whichever is greatest. All splices shall be wired together.
c. Vertical reinforcing bars shall have a minimum clearance of ¼" from masonry and shall be held in position top and bottom and at intervals not exceeding 4'-0". Accessories for such support shall be used. Provide "AA Wire Products Company" (or approved equal) Rebar Positioner AA225 or AA239 for vertical bars and AA238 for horizontal bars or approved equal products from other suppliers.
d. Horizontal joint reinforcing shall be lapped no less than 6" all splices, including corners and tees where no control joint is used.
e. All horizontal joint reinforcing shall stop at control joints.
f. Horizontal reinforcing in bond beams shall be continuous through control joints.
g. All CMU walls shall have joint reinforcing @ 16"o.c. All joint reinforcing shall have (2) 9 gauge (0.148"ø or W1.7) side rods & cross rods @ 16"o.c.

7.7 Masonry contractor shall provide for and coordinate with other trades for placement of all items to be embedded or built into the masonry.

MINIMUM SPLICING LENGTH (Ld) FOR MASONRY	
BAR SIZE	SPLICE LENGTH
#3	16"
#4	22"
#5	26"
#6	43"
#7	60"

8.0 COLD-FORMED STEEL FRAMING:

8.1 All members shall be designed in accordance with the American Iron and Steel Institute (AISI) "Specifications for the Design of Cold-formed Steel Structural Members", Latest Edition.

8.2 All framing members shall be formed from corrosion-resistant steel corresponding to the requirements of ASTM A446, with a minimum yield strength of 33 ksi for joists and studs and 33 ksi for runners.

8.3 All members shown are standard designations of Steel Stud Manufacturers Association (SSMA)

8.4 Design of members indicated in structural drawings is based on minimum properties of products produced per SSMA standards of members specified. No substitution of materials is acceptable for use without prior approval of the structural engineer. Substitutions shall meet or exceed all properties produced per SSMA standards of members specified.

8.5 All shop drawing submittals shall show layout, spacing, sizes, thicknesses and types of cold-formed metal framing, fabrication, and fastening and anchorage details, including mechanical fasteners. Show reinforcing channels, opening framing, supplemental framing, strapping, bracing, bridging, splices, accessories, connection details and attachment to adjoining work.

8.6 Shop drawings, design calculations and other structural data shall be prepared and sealed by a qualified engineer. The Structural Engineer shall be legally qualified to practice in the jurisdiction where the project is located and shall be experienced in providing engineering services of the kind indicated.

8.7 All framing components shall be cut squarely for attachment to perpendicular members or as required for an angular fit tight against abutting members. All load bearing stud/walls shall be factory assembled into panels with studs bearing squarely and fully in top and bottom tracks.

8.8 Fastening components shall be by self-drilling screws or by welding as defined below UNO on the drawings.

8.9 Screwed connections:
a. Screws shall be type S-12 or type S-4 for all framing members per manufacturer's recommendations.
b. A minimum of three (3) exposed threads shall penetrate through at joined materials.
c. Corrosion-resistant cadmium-plated screws shall be used for screws attaching metal lath, masonry ties, and other exterior materials.

8.10 Welded connections:
a. Gas metal arc welding (GMAW) shall be used for 20 ga. Or lighter members. AWSE-705-3, E-705-E, E-705-6 wire electrodes .030"-.035" diameter shall be used with carbon dioxide, argon-oxygen or argon-carbon dioxide shielding. Welding equipment 60-100 amperes at 25 volts using 220-volt 3-phase electric service.
b. Shielded metal arc welding (SMAW) shall be used for 18 ga' and heavier members. AWS E-6012, E-6013, or E-7014 electrodes of 3/32" or 1/8" diameter shall be used. Welding equipment heat setting shall be varied dependent on material thickness.
c. All welds shall be touched up with zinc rich paint, or paint similar to that used by the framing member manufacturer.

8.11 Alignment of studs (plumbness) and walls (straightness) shall be within 1/960 of their respective heights and lengths.

8.12 Studs shall be plumbed, aligned, and securely attached to top and bottom runners. Splices in studs are not permitted.

8.13 Where manufacturer's recommendations for erection, attachment, assembly, bracing, alignment, or other installation, or assembly requirements are more stringent than indicated in these drawings, the manufacturer's recommendations shall apply.

STEEL THICKNESS						
Gauge:	Mils	Design Thickness		Minimum Thickness		Yield Strength
		Inches	mm	Inches	mm	ksi
20	33	0.0346	0.879	0.0329	0.836	33
18	43	0.0451	1.146	0.0428	1.087	33
16	54	0.0566	1.438	0.0538	1.367	50
14	68	0.0713	1.811	0.0677	1.720	50
12	97	0.1017	2.583	0.0966	2.454	50

FLOOR ELEVATION TABLE	
LEVEL	ELEVATION
B/HIGH ROOF	SLOPES - SEE S-206
B/LOW ROOF DECK	50'-0"
LEVEL 3	35'-0"
LEVEL 2	18'-6"
LEVEL 1	0'-0"
LEVEL U1	-4'-0"
36.00 MSL	-5'-3"
PC ELEVATOR	-10'-3"

101 NORTH THIRD STREET, SUITE 500
WILMINGTON, NORTH CAROLINA 28401
TEL. 910.790.3111 FAX. 910.790.9901
WWW.LS3P.COM

WOODS ENGINEERING
Consulting Structural Engineers
254 North Front Street Phone: 910.343.8007
Suite 201 Fax: 910.343.8088
Wilmington, NC 28401 www.woodseng.com

COPYRIGHT 2023 ALL RIGHTS RESERVED. PRINTED OR ELECTRONIC DRAWINGS AND DOCUMENTATION MAY NOT BE REPRODUCED IN ANY FORM WITHOUT WRITTEN PERMISSION FROM LS3P ASSOCIATES LTD

Project Grace
Grace Street
Wilmington, NC 28401
LS3P PROJECT: 7701-177600
WOODS PROJECT: 21-3351

	DATE	DESCRIPTION
0	2023.05.22	PERMIT SET
2	2023.06.22	ADDENDUM #2

SHEET NAME:
GENERAL NOTES

ORIG SUBMISSION: 2023.05.22

SHEET:
S-101

PERMIT SET

10/20/2021 8:48:37 AM

1 2 3 4 5 6

A B C D E

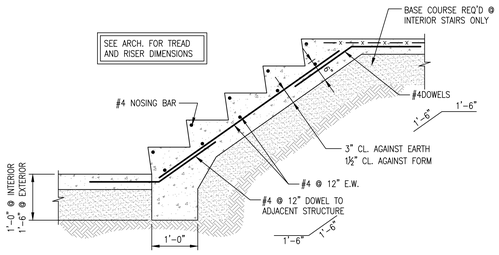

TYPICAL STAIR ON GRADE
SCALE: 3/4" = 1'-0"

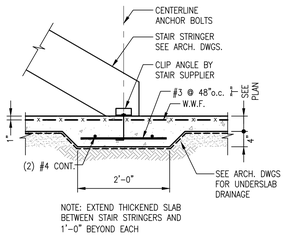

NOTE: EXTEND THICKENED SLAB BETWEEN STAIR STRINGERS AND 1'-0" BEYOND EACH

TYPICAL THICKENED SLAB @ BASE OF STAIRS
SCALE: 3/4" = 1'-0"

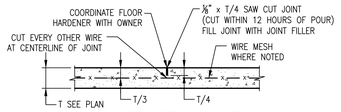

CONTRACTION JOINT
SCALE: 1" = 1'-0"
WITH WIRE MESH

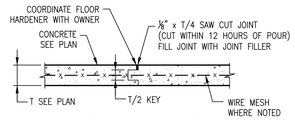

CONSTRUCTION JOINT
SCALE: 1" = 1'-0"
WITH WIRE MESH

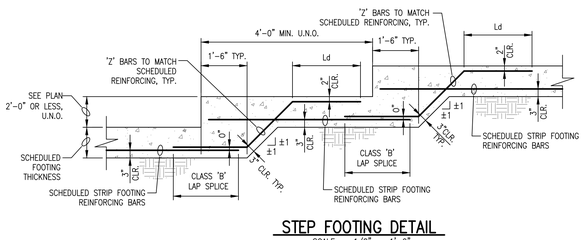

STEP FOOTING DETAIL
SCALE: 1/2" = 1'-0"

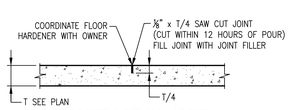

CONTRACTION JOINT
SCALE: 1" = 1'-0"
WITHOUT WIRE MESH

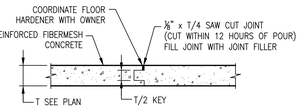

CONSTRUCTION JOINT
SCALE: 1" = 1'-0"
WITHOUT WIRE MESH

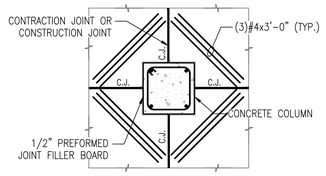

ISOLATION JOINT DETAIL
NOT TO SCALE

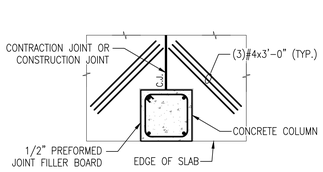

TYPICAL ISOLATION JOINT AT SLAB EDGE
NOT TO SCALE

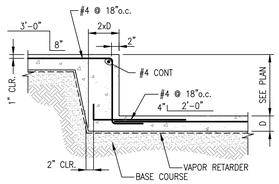

TYPICAL SLAB STEP
SCALE: 3/4" = 1'-0"

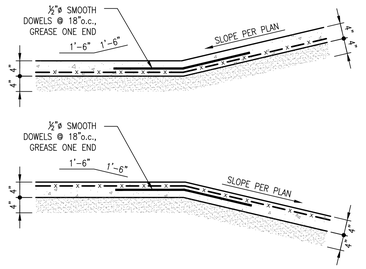

TYPICAL RAMP AT SLAB ON GRADE
SCALE: 3/4" = 1'-0"

STEEL LINTEL SCHEDULE

CLEAR OPENING	ONE ANGLE FOR EA 4"WYTHE	MIN BRG	MAX. HEIGHT OF BRICK
0'-8" TO 6'-0"	L6x4x⅜" LLH	4"	9'-0"
6'-0" TO 8'-0"	L6x6x⅜"	8"	9'-0"
8'-0" TO 10'-0"	L6x6x⅜"	8"	9'-0"
10'-0" TO 12'-0"	10"x6"x⅜" BENT PLATE LLV	8"	9'-0"

NOTES:
1. WHERE LINTELS BEAR ON HOLLOW MASONRY UNITS FILL ALL CORES UNDER BEARING WITH GROUT FROM BOTTOM OF LINTEL TO 16" MINIMUM BELOW.
2. THESE LINTELS ARE NOT DESIGNED FOR MASONRY WALLS THAT CARRY FLOOR OR ROOF LOAD.
3. LINTELS ARE DESIGNED TO CARRY THE MAXIMUM HEIGHT OF BRICK LISTED IN SCHEDULE. IF STACKED BRICK HEIGHT EXCEEDS LISTED VALUE, THEN CONTACT STRUCTURAL ENGINEER FOR ALTERNATE DESIGN.
4. ALL STEEL LINTELS SHALL BE HOT DIP GALVANIZED AND PAINTED.
5. SEE DETAIL BELOW FOR REQUIREMENTS

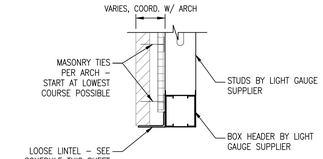

LOOSE LINTEL DETAIL
SCALE: 3/4" = 1'-0"

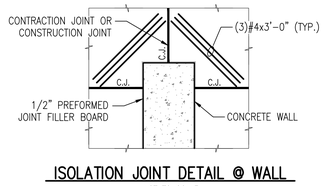

ISOLATION JOINT DETAIL @ WALL
NOT TO SCALE

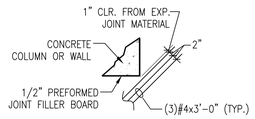

ISOLATION JOINT REBAR PLACEMENT
NOT TO SCALE

TYP. REBAR PLACEMENT AT ALL CONDITIONS PLACE REBAR 1" CLR. FROM TOP OF SLAB

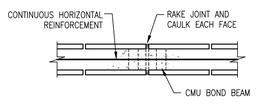

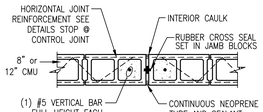

TYPICAL CONTROL JOINT

DETAIL "F"
SCALE: 3/4" = 1'-0"

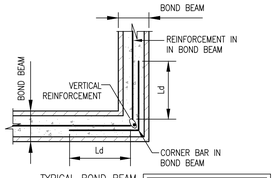

TYPICAL BOND BEAM REINFORCING

NOTE: TRUSS TYPE REINFORCEMENT SHOWN, HOWEVER LADDER OR TRUSS TYPES ARE ACCEPTABLE.

DETAIL "D"
SCALE: 3/4" = 1'-0"

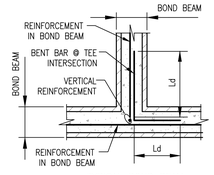

TYPICAL BOND BEAM INTERSECTION REINFORCING

DETAIL "E"
SCALE: 3/4" = 1'-0"

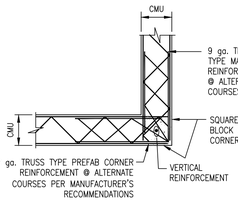

TYPICAL CMU CORNER

DETAIL "B"
SCALE: 3/4" = 1'-0"

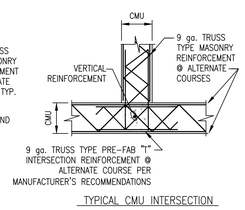

TYPICAL CMU INTERSECTION

DETAIL "C"
SCALE: 3/4" = 1'-0"

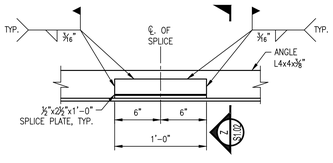

TYPICAL ANGLE SPLICE DETAIL
SCALE: 1 1/2" = 1'-0"

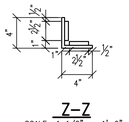

Z-Z
SCALE: 1 1/2" = 1'-0"

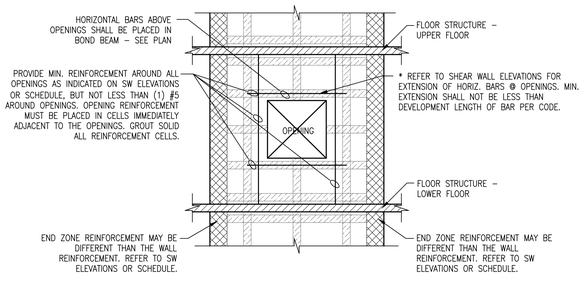

TYPICAL CMU OPENING ELEVATION
NOT TO SCALE

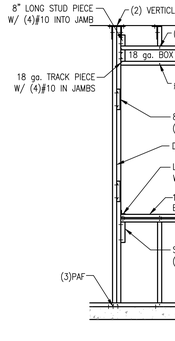

TYPICAL EXTERIOR WALL FRAMING AT WINDOW OPENING UP TO 3'-4"
SCALE: 1/2" = 1'-0"

TYPICAL EXTERIOR WALL FRAMING AT WINDOW OPENING UP TO 6'-4"
SCALE: 1/2" = 1'-0"

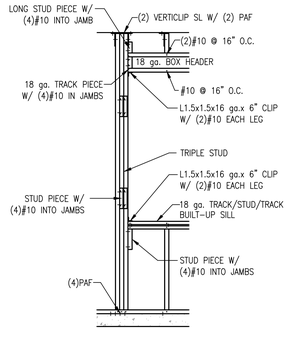

TYPICAL EXTERIOR WALL FRAMING AT WINDOW OPENING UP TO 8'-8"
SCALE: 1/2" = 1'-0"

TYPICAL LIGHT GAUGE CONSTRUCTION DETAILS FOR NON-LOAD BEARING EXTERIOR WALLS

NOTE: THESE DETAILS ARE GENERIC AND ARE FOR GENERAL INFORMATION AND BUDGET PRICING. ACTUAL DESIGN BY LIGHT GAUGE SUPPLIER AND ENGINEER.

NEW HANOVER COUNTY, NORTH CAROLINA ESTABLISHED 1729

CFD Cape Fear Development

LS3P

101 NORTH THIRD STREET, SUITE 500
WILMINGTON, NORTH CAROLINA 28401
TEL. 910.790.3111 FAX. 910.790.9901
WWW.LS3P.COM

WOODS ENGINEERING
Consulting Structural Engineers
254 North Front Street Phone: 910.343.8007
Suite 201 Fax: 910.343.8088
Wilmington, NC 28401 www.woodseng.com

NORTH CAROLINA PROFESSIONAL ENGINEER CORPORATE SEAL No. C-1806

NORTH CAROLINA PROFESSIONAL ENGINEER SEAL 19475 ENGINEER DON R. WOODS

COPYRIGHT 2023 ALL RIGHTS RESERVED. PRINTED OR ELECTRONIC DRAWINGS AND DOCUMENTATION MAY NOT BE REPRODUCED IN ANY FORM WITHOUT WRITTEN PERMISSION FROM LS3P ASSOCIATES LTD.

Project Grace

Grace Street
Wilmington, NC 28401

LS3P PROJECT: 7701-177600
WOODS PROJECT: 21-3351

	DATE	DESCRIPTION
0	2023.05.22	PERMIT SET

SHEET NAME:
TYPICAL DETAILS

ORIG SUBMISSION: 2023.05.22

SHEET:
S-103

PERMIT SET

THE LINE SHOWN ABOVE IS EXACTLY ONE INCH LONG ON ARCH D SHEETS ORIGINAL PAGE SIZE

10/20/2021 8:48:37 AM

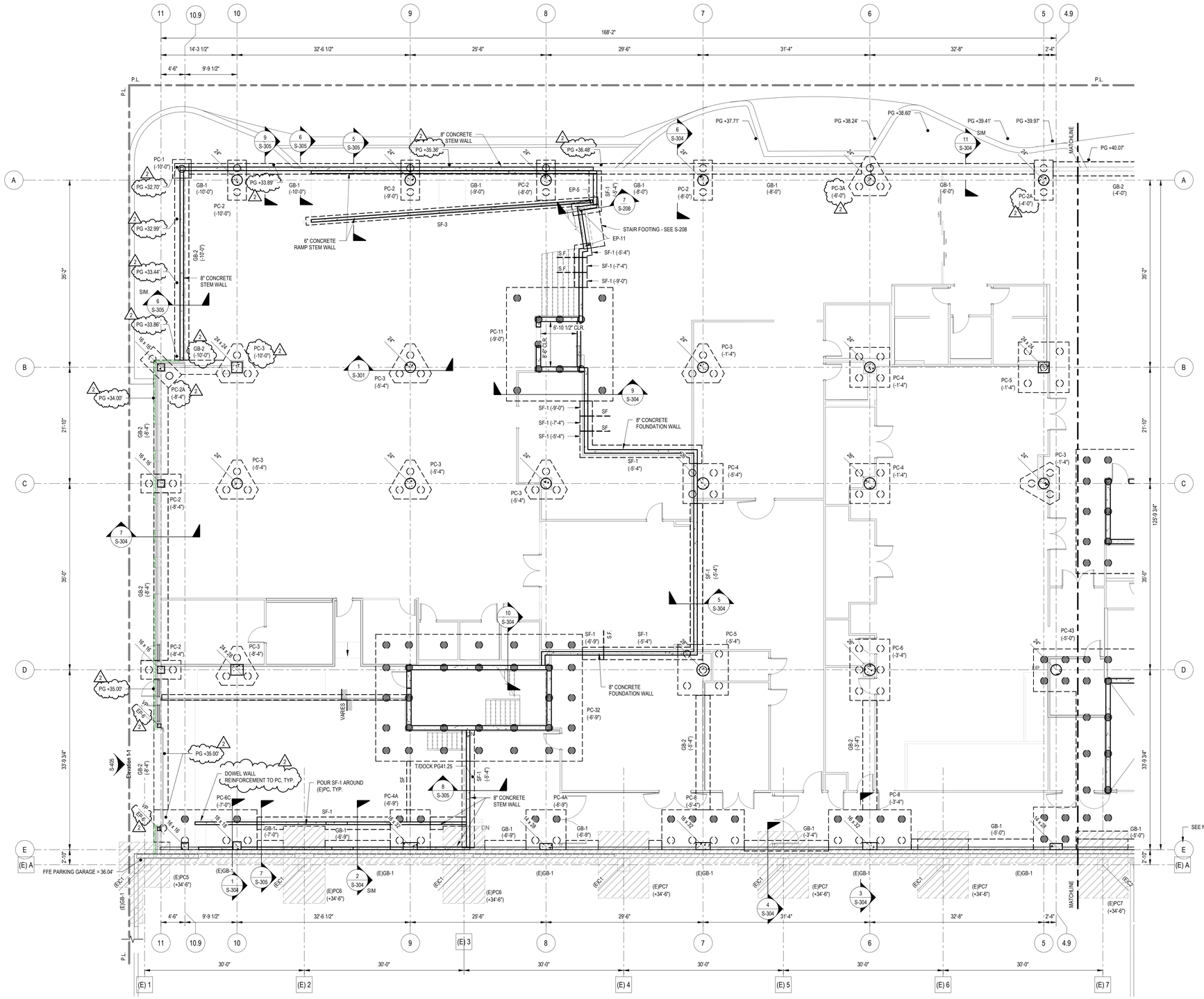

FOUNDATION & SLAB ON GRADE LEGEND

- S.F. — INDICATES STEP FOOTING - SEE S-10 SHEETS FOR TYPICAL DETAILS
- CJ — INDICATES CONCRETE SLAB CONTRACTION JOINTS, SEE S-10 SHEETS FOR TYPICAL DETAILS. SEE PLAN FOR LOCATIONS. MAXIMUM SPACING = 12' IN EACH DIRECTION
- SIZE — INDICATES CONCRETE COLUMN - SEE SCHEDULE ON S-60 SHEETS
- SIZE BP-x — HSS STEEL COLUMN - SEE PLAN FOR SIZE AND LOCATION SEE S3.0 SHEETS FOR BASE PLATE DETAILS (BP-x)
- VP — HSS7X7X1/4 VENEER POST
- 0 — GRID DESIGNATION FOR CENTERLINE OF COLUMN U.N.O.
- (E) 0 — EXISTING PARKING DECK GRID LINE
- INDICATES SLAB DEPRESSION - SEE PLAN COORDINATE EXACT LIMITS W/ ARCH. & PLUMBING DWGs. & SEE S-10 SHEETS FOR TYPICAL SLAB DEPRESSION DETAILS
- F.D. — FLOOR DRAIN - COORDINATE W/ PLUMBING DWGs
- P.L. — INDICATES PROPERTY LINE
- INDICATES MATCH LINE
- CONCRETE PILE CAP - SEE PLAN & SCHEDULE THIS SHEET. SEE DETAILS ON S3.02
- INDICATES GRAVITY PILES SEE S-301
- INDICATES UPLIFT PILES SEE S-301
- GB-X — CONCRETE GRADE BEAM SEE SCHEDULE THIS SHEET
- INV = X.XX — UNDERGROUND PLUMBING LINES - COORDINATE WITH PLUMBING DWGs
- E.J. — BUILDING EXPANSION JOINT LOCATION = SEE S-10 SHEETS FOR TYPICAL DETAILS
- INDICATES GRAVITY SEWER LINES
- PG = X'-X" — INDICATES PROPOSED FINISHED GRADE ELEVATION (MSL) COORDINATE WITH CIVIL & ARCH PLANS
- Px — INDICATES CONCRETE PIER (x-x) INDICATES TOP OF PIER ELEVATION FROM DATUM SEE S-305

FOUNDATION & SLAB ON GRADE PLAN NOTES

1. SEE S-10 SHEETS FOR ADDITIONAL GENERAL NOTES, MATERIAL NOTES AND MATERIAL SPECIFICATIONS. ALSO, SEE S-10 SHEETS FOR TYPICAL DETAILS. TYPICAL DETAILS ARE GENERALLY NOT SHOWN ON PLAN BUT RATHER ARE INTENDED TO DEFINE TYPICAL CONSTRUCTION CONDITIONS.
2. DATUM ELEVATION = TOP OF SLAB ELEVATION = ASSUMED EL-0" = 41.25' M.S.L. OTHER ELEVATIONS ARE NOTED AS (+ OR -) FROM DATUM ELEVATION. SEE FLOOR ELEVATION TABLE SHEET S-103 FOR TYPICAL SLAB ELEVATIONS.
3. TOP OF PILE CAPS SHALL BE (-1'-4") FROM DATUM ELEVATION, U.N.O.
4. INTERIOR TROWEL FINISHED SLAB-ON-GRADE (THICKNESS SPECIFIED ON PLAN) 3000 psi CONCRETE REINFORCED WITH 3.0lbs/yd.³ OF SYNTHETIC MACRO-FIBERS (TUF-STRAND SF BY EUCLID, FIBER MAC SERIES BY BASF, OR FORTA-FERRO BY FORTA CORP, OR APPROVED EQUAL) ON 15 mil VAPOR RETARDER, ON 6" CLEAN SANDS WITH LESS THAN 20% FINES PASSING #100 SIEVE (SP,SW,SP-SM) OR APPROVED EQUAL ON WELL COMPACTED SUB GRADE. EXTERIOR AND BROOM FINISHED SLABS ON GRADE (THICKNESS SPECIFIED ON PLAN) 4,000 psi CONCRETE REINFORCED WITH WWF6X6XW2.9XW2.9 FLAT SHEETS ON 10 MIL VAPOR BARRIER ON 6" CLEAN SANDS ON COMPACTED SUB-GRADE. TRUCK LOADING BAY SHALL BE 8", 5,000 psi CONCRETE WITH #4 @16"o.c. EACH WAY, TYP.
5. REFER TO ARCHITECTURAL, MECHANICAL, ELECTRICAL, PLUMBING, AND OTHER DISCIPLINE DRAWINGS FOR OPENINGS AND DEPRESSIONS NOT SHOWN ON THESE DRAWINGS.
6. RELOCATE ANY UTILITY LINES THAT CONFLICT WITH THE FOUNDATIONS OR DROP THE FOUNDATIONS TO AN ELEVATION BELOW THE PROPOSED UTILITIES. RELOCATE ANY GRAVITY FLOW LINES THAT CONFLICT WITH SPREAD FOOTINGS AS SHOWN ON STRUCTURAL FOUNDATION PLANS. IF A GRAVITY FLOW LINE TRAVELS UNDER A CONTINUOUS STRIP FOOTING EITHER:
   a. DROP THE FOOTING ELEVATION BELOW THE PROPOSED LINE.
   b. IF THE UTILITY LINE IS < 2'-0" BELOW THE STRIP FOOTING, THEN ENCASE THE LINE IN A STEEL PIPE 2" LARGER IN DIAMETER THAN THE LINE AND EXTEND THE PIPE 1'-0" PAST EACH SIDE OF THE CONCRETE FOOTING. BACKFILL THE TRENCH WITH #57 STONE. THE BEARING CAPACITY OF THIS AREA MUST MEET OR EXCEED THE ALLOWABLE SOIL BEARING CAPACITY.
   c. IF THE UTILITY LINE IS ≥ 2'-0" BELOW BOTTOM OF FOOTING, THEN STEEL PIPE IS NOT REQUIRED. BACKFILL THE TRENCH WITH #57 STONE. THE BEARING CAPACITY OF THIS AREA MUST MEET OR EXCEED THE ALLOWABLE SOIL BEARING CAPACITY.
7. DIMENSIONS ARE FROM EDGE OF SLAB (E.O.S.) AND OUTSIDE FACE OF STUD (O.F.S.) / CURTAINWALL (O.F.C.W.) TO COLUMN CENTERLINE UNLESS NOTED OTHERWISE.
8. S.F. = STEP FOOTING, SEE TYPICAL DETAIL ON S-10 SHEETS, G.C. TO COORDINATE STEPS IN FOUNDATION FOR PLUMBING, ELECTRICAL AND MECHANICAL.
9. SEE S-60 SHEETS FOR CONCRETE COLUMN SCHEDULE.
10. WHEN A SECTION IS CUT OR A DETAIL IS LABELED FOR A PARTICULAR CONDITION, THAT SECTION OR DETAIL SHALL APPLY FOR ALL SIMILAR CONDITIONS REGARDLESS OF WHETHER CUT OR LABELED, U.N.O.
11. GRID E DESIGNATES OUTSIDE FACE OF COLUMN AND SOUTH FACING EDGE OF SLAB.

PC-2A & PC-3A ADDED

PILE CAP (PC-x) SCHEDULE

MARK	# PILES	COMMENTS
PC-1	1	SEE SHEET S-302
PC-2	2	SEE SHEET S-302
PC-2A	2	SEE SHEET S-302
PC-3	3	SEE SHEET S-302
PC-3A	3	SEE SHEET S-302
PC-4	4	SEE SHEET S-302
PC-4A	4	SEE SHEET S-302
PC-5	5	SEE SHEET S-302
PC-5A	5	SEE SHEET S-302
PC-6	6	SEE SHEET S-302
PC-6A	6	SEE SHEET S-302
PC-6B	6	SEE SHEET S-302
PC-6C	5	SEE SHEET S-302
PC-8	8	SEE SHEET S-302
PC-8A	8	SEE SHEET S-302
PC-11	11	SEE SHEET S-303
PC-31	31	SEE SHEET S-303
PC-32	32	SEE SHEET S-303
PC-43	43	SEE SHEET S-303

SEE S-302 & S-303 FOR PILE CAP DIMENSIONS & REINFORCING

FOUNDATION PLAN - AREA A

SCALE: 1/8" = 1'-0"

STRIP FOOTING (SF-x) SCHEDULE

MARK	WIDTH x THICKNESS x LENGTH	REINFORCEMENT		COMMENTS
		TOP BARS	BOTTOM BARS	
SF-1	2'-4" x 1'-0" x CONT.	#4 @ 9"o.c. SHORT & (2) #5 CONT.	(1) #5	SEE 5-S/S-304
SF-2	2'-0" x 1'-4" x CONT.	-	(3) #5	
SF-3	1'-6" X 0'-8" x CONT.	-	(2) #5	MONOLITHIC W/ FOOTING

SPREAD FOOTING (Fx) SCHEDULE

MARK	WIDTH x LENGTH x THICKNESS	REINFORCEMENT		COMMENTS
		TOP BARS EACH WAY (U.N.O.)	BOTTOM BARS EACH WAY (U.N.O.)	
F4.5	4'-6" x 4'-6" x 1'-0"	-	(5) #5	

GRADE BEAM (GB-x) SCHEDULE

MARK	WIDTH x THICKNESS x LENGTH	BEAM REINFORCING	STIRRUP REQUIREMENTS	COMMENTS
GB-1	2'-0" x 2'-0" x SEE S-302	(5) #7 TOP & BOTTOM	(2) LEGGED #3 STIRRUPS @10"o.c. ☐	
GB-2	2'-8" x 2'-8" x SEE S-302	(6) #9 TOP & BOTTOM	(2) LEGGED #3 STIRRUPS @8"o.c. ☐	

TRUE NORTH PROJECT NORTH

NEW HANOVER COUNTY • NORTH CAROLINA • ESTABLISHED 1729

CFD Cape Fear Development

LS3P

101 NORTH THIRD STREET, SUITE 500
WILMINGTON, NORTH CAROLINA 28401
TEL. 910.790.3111 FAX. 910.790.9901
WWW.LS3P.COM

WOODS ENGINEERING Consulting Structural Engineers

254 North Front Street Phone: 910.343.8007
Suite 201 Fax: 910.343.8088
Wilmington, N.C. 28401 www.woodseng.com

WOODS ENGINEERING, P.A. CORPORATE SEAL No. C-1806 NORTH CAROLINA

NORTH CAROLINA PROFESSIONAL ENGINEER SEAL 19475 RON R. WOODS

COPYRIGHT 2023 ALL RIGHTS RESERVED. PRINTED OR ELECTRONIC DRAWINGS AND DOCUMENTATION MAY NOT BE REPRODUCED IN ANY FORM WITHOUT WRITTEN PERMISSION FROM LS3P ASSOCIATES LTD.

Project Grace

Grace Street
Wilmington, NC 28401

LS3P PROJECT: 7701-177600
WOODS PROJECT: 21-3351

Δ	DATE	DESCRIPTION
0	2023.05.22	PERMIT SET
2	2023.06.22	ADDENDUM #2

SHEET NAME: FOUNDATION PLAN - AREA A

ORIG SUBMISSION: 2023.05.22

SHEET: S-200A

PERMIT SET

6/21/2023 11:38:06 AM

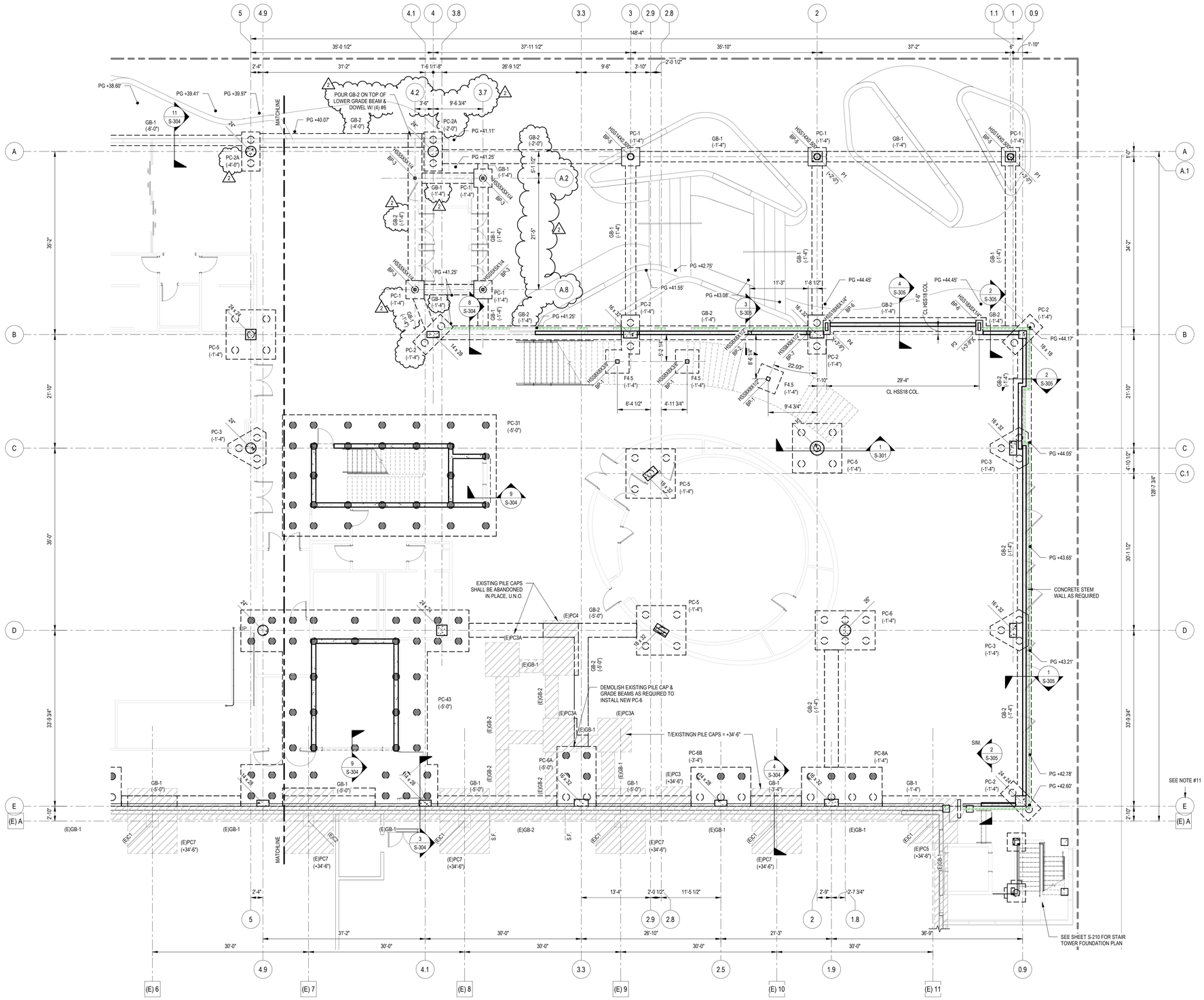

FOUNDATION & SLAB ON GRADE LEGEND

- S.F. — INDICATES STEP FOOTING - SEE S-10 SHEETS FOR TYPICAL DETAILS
- CJ / J3 — INDICATES CONCRETE SLAB CONTRACTION JOINTS, SEE S-10 SHEETS FOR TYPICAL DETAILS. SEE PLAN FOR LOCATIONS. MAXIMUM SPACING = 12' IN EACH DIRECTION
- SIZE — INDICATES CONCRETE COLUMN - SEE SCHEDULE ON S-60 SHEETS
- SIZE / BP-x — HSS STEEL COLUMN - SEE PLAN FOR SIZE AND LOCATION SEE S3.0 SHEETS FOR BASE PLATE DETAILS (BP-x)
- VP — HSS7X7X1/4 VENEER POST
- 0 — GRID DESIGNATION FOR CENTERLINE OF COLUMN U.N.O.
- (E) 0 — EXISTING PARKING DECK GRID LINE
- INDICATES SLAB DEPRESSION - SEE PLAN COORDINATE EXACT LIMITS W/ ARCH. & PLUMBING DWGs & SEE S-10 SHEETS FOR TYPICAL SLAB DEPRESSION DETAILS
- F.D. — FLOOR DRAIN - COORDINATE W/ PLUMBING DWGs
- P.L. — INDICATES PROPERTY LINE
- INDICATES MATCH LINE
- CONCRETE PILE CAP - SEE PLAN & SCHEDULE THIS SHEET. SEE DETAILS ON S3.02
- INDICATES GRAVITY PILES SEE S-301
- INDICATES UPLIFT PILES SEE S-301
- GB-X — CONCRETE GRADE BEAM SEE SCHEDULE THIS SHEET
- INV = X.XX — UNDERGROUND PLUMBING LINES - COORDINATE WITH PLUMBING DWGs
- E.J. — BUILDING EXPANSION JOINT LOCATION = SEE S-10 SHEETS FOR TYPICAL DETAILS
- INDICATES GRAVITY SEWER LINES
- PG = X'-X" — INDICATES PROPOSED FINISHED GRADE ELEVATION (MSL) COORDINATE WITH CIVIL & ARCH PLANS
- Px — INDICATES CONCRETE PIER (x-x) INDICATES TOP OF PIER ELEVATION FROM DATUM SEE S-305

FOUNDATION & SLAB ON GRADE PLAN NOTES

1. SEE S-10 SHEETS FOR ADDITIONAL GENERAL NOTES, MATERIAL NOTES AND MATERIAL SPECIFICATIONS. ALSO, SEE S-10 SHEETS FOR TYPICAL DETAILS. TYPICAL DETAILS ARE GENERALLY NOT SHOWN ON PLAN BUT RATHER ARE INTENDED TO DEFINE TYPICAL CONSTRUCTION CONDITIONS.
2. DATUM ELEVATION = TOP OF SLAB ELEVATION = ASSUMED 0'-0" = 41.25' M.S.L. OTHER ELEVATIONS ARE NOTED AS (+ OR -) FROM DATUM ELEVATION. SEE FLOOR ELEVATION TABLE SHEET S-103 FOR TYPICAL SLAB ELEVATIONS.
3. TOP OF PILE CAPS SHALL BE (-1'-4") FROM DATUM ELEVATION, U.N.O.
4. INTERIOR TROWEL FINISHED SLAB-ON-GRADE (THICKNESS SPECIFIED ON PLAN) 3000 psi CONCRETE REINFORCED WITH 3.0lbs/yd.³ OF SYNTHETIC MACRO-FIBERS (TUF-STRAND SF BY EUCLID, FIBER MAC SERIES BY BASF, OR FORTA-FERRO BY FORTA CORP, OR APPROVED EQUAL) ON 15 mil VAPOR RETARDER, ON 6" CLEAN SANDS WITH LESS THAN 20% FINES PASSING #100 SIEVE (SP,SW,SP-SM) OR APPROVED EQUAL ON WELL COMPACTED SUB GRADE. EXTERIOR AND BROOM FINISHED SLABS ON GRADE (THICKNESS SPECIFIED ON PLAN) 4,000 psi CONCRETE REINFORCED WITH WWF6X6XMW2.9XW2.9 FLAT SHEETS ON 10 MIL VAPOR BARRIER ON 6" CLEAN SANDS ON COMPACTED SUB-GRADE. TRUCK LOADING BAY SHALL BE 8", 5,000 psi CONCRETE WITH #4 @16"o.c. EACH WAY, TYP.
5. REFER TO ARCHITECTURAL, MECHANICAL, ELECTRICAL, PLUMBING, AND OTHER DISCIPLINE DRAWINGS FOR OPENINGS AND DEPRESSIONS NOT SHOWN ON THESE DRAWINGS.
6. RELOCATE ANY UTILITY LINES THAT CONFLICT WITH THE FOUNDATIONS OR DROP THE FOUNDATIONS TO AN ELEVATION BELOW THE PROPOSED UTILITIES. RELOCATE ANY GRAVITY FLOW LINES THAT CONFLICT WITH SPREAD FOOTINGS AS SHOWN ON STRUCTURAL FOUNDATION PLANS. IF A GRAVITY FLOW LINE TRAVELS UNDER A CONTINUOUS STRIP FOOTING EITHER:
   a. DROP THE FOOTING ELEVATION BELOW THE PROPOSED LINE.
   b. IF THE UTILITY LINE IS < 2'-0" BELOW THE STRIP FOOTING, THEN ENCASE THE LINE IN A STEEL PIPE 2" LARGER IN DIAMETER THAN THE LINE AND EXTEND THE PIPE 1'-0" PAST EACH SIDE OF THE CONCRETE FOOTING. BACKFILL THE TRENCH WITH #57 STONE. THE BEARING CAPACITY OF THIS AREA MUST MEET OR EXCEED THE ALLOWABLE SOIL BEARING CAPACITY.
   c. IF THE UTILITY LINE IS ≥ 2'-0" BELOW BOTTOM OF FOOTING, THEN STEEL PIPE IS NOT REQUIRED. BACKFILL THE TRENCH WITH #57 STONE. THE BEARING CAPACITY OF THIS AREA MUST MEET OR EXCEED THE ALLOWABLE SOIL BEARING CAPACITY.
7. DIMENSIONS ARE FROM EDGE OF SLAB (E.O.S.) AND OUTSIDE FACE OF STUD (O.F.S.) / CURTAINWALL (O.F.CW.) TO COLUMN CENTERLINE UNLESS NOTED OTHERWISE.
8. S.F. = STEP FOOTING, SEE TYPICAL DETAIL ON S-10 SHEETS. G.C. TO COORDINATE STEPS IN FOUNDATION FOR PLUMBING, ELECTRICAL AND MECHANICAL.
9. SEE S-60 SHEETS FOR CONCRETE COLUMN SCHEDULE.
10. WHEN A SECTION IS CUT OR A DETAIL IS LABELED FOR A PARTICULAR CONDITION, THAT SECTION OR DETAIL SHALL APPLY FOR ALL SIMILAR CONDITIONS REGARDLESS OF WHETHER CUT OR LABELED, U.N.O.
11. GRID E DESIGNATES OUTSIDE FACE OF COLUMN AND SOUTH FACING EDGE OF SLAB.

PC-2A & PC-3A ADDED

PILE CAP (PC-x) SCHEDULE

MARK	# PILES	COMMENTS
PC-1	1	SEE SHEET S-302
PC-2	2	SEE SHEET S-302
PC-2A	2	SEE SHEET S-302
PC-3	3	SEE SHEET S-302
PC-3A	3	SEE SHEET S-302
PC-4	4	SEE SHEET S-302
PC-4A	4	SEE SHEET S-302
PC-5	5	SEE SHEET S-302
PC-5A	5	SEE SHEET S-302
PC-6	6	SEE SHEET S-302
PC-6A	6	SEE SHEET S-302
PC-6B	6	SEE SHEET S-302
PC-6C	5	SEE SHEET S-302
PC-8	8	SEE SHEET S-302
PC-8A	8	SEE SHEET S-302
PC-11	11	SEE SHEET S-303
PC-31	31	SEE SHEET S-303
PC-32	32	SEE SHEET S-303
PC-43	43	SEE SHEET S-303

SEE S-302 & S-303 FOR PILE CAP DIMENSIONS & REINFORCING

FOUNDATION PLAN - AREA B

SCALE: 1/8" = 1'-0"

STRIP FOOTING (SF-x) SCHEDULE

MARK	WIDTH x THICKNESS x LENGTH	REINFORCEMENT		COMMENTS
		TOP BARS	BOTTOM BARS	
SF-1	2'-4" x 1'-0" x CONT.	#4 @ 9"o.c. SHORT & (2) #5 CONT.	(1) #5	SEE S-5/S-304
SF-2	2'-0" x 1'-4" x CONT.	-	(3) #5	
SF-3	1'-6" X 0'-8" x CONT.	-	(2) #5	MONOLITHIC W/ FOOTING

SPREAD FOOTING (Fx) SCHEDULE

MARK	WIDTH x LENGTH x THICKNESS	REINFORCEMENT		COMMENTS
		TOP BARS EACH WAY (U.N.O.)	BOTTOM BARS EACH WAY (U.N.O.)	
F4.5	4'-6" x 4'-6" x 1'-0"	-	(5) #5	

GRADE BEAM (GB-x) SCHEDULE

MARK	WIDTH x THICKNESS x LENGTH	BEAM REINFORCING	STIRRUP REQUIREMENTS	COMMENTS
GB-1	2'-0" x 2'-0" x SEE S-302	(5) #7 TOP & BOTTOM	(2) LEGGED #3 STIRRUPS @10"o.c. ☐	
GB-2	2'-6" x 2'-6" x SEE S-302	(6) #9 TOP & BOTTOM	(2) LEGGED #3 STIRRUPS @8"o.c. ☐	

TRUE NORTH / PROJECT NORTH

NEW HANOVER COUNTY • NORTH CAROLINA • ESTABLISHED 1729

CFD Cape Fear Development

LS3P

101 NORTH THIRD STREET, SUITE 500
WILMINGTON, NORTH CAROLINA 28401
TEL. 910.790.3111 FAX. 910.790.9901
WWW.LS3P.COM

WOODS ENGINEERING Consulting Structural Engineers
254 North Front Street Phone: 910.343.8007
Suite 201 Fax: 910.343.8088
Wilmington, N.C. 28401 www.woodseng.com

WOODS ENGINEERING, P.A. CORPORATE SEAL No. C-1806 NORTH CAROLINA

NORTH CAROLINA PROFESSIONAL ENGINEER SEAL 19475 RON R. WOODS

COPYRIGHT 2023 ALL RIGHTS RESERVED. PRINTED OR ELECTRONIC DRAWINGS AND DOCUMENTATION MAY NOT BE REPRODUCED IN ANY FORM WITHOUT WRITTEN PERMISSION FROM LS3P ASSOCIATES LTD.

Project Grace

Grace Street
Wilmington, NC 28401

LS3P PROJECT: 7701-177600
WOODS PROJECT: 21-3351

Δ	DATE	DESCRIPTION
0	2023.05.22	PERMIT SET
2	2023.06.22	ADDENDUM #2

SHEET NAME:
FOUNDATION PLAN - AREA B

ORIG SUBMISSION: 2023.05.22

SHEET:
S-200B

PERMIT SET

THE LINE SHOWN ABOVE IS EXACTLY ONE INCH LONG. IF IT IS NOT, DRAWING IS NOT TO SCALE

6/21/2023 11:38:18 AM

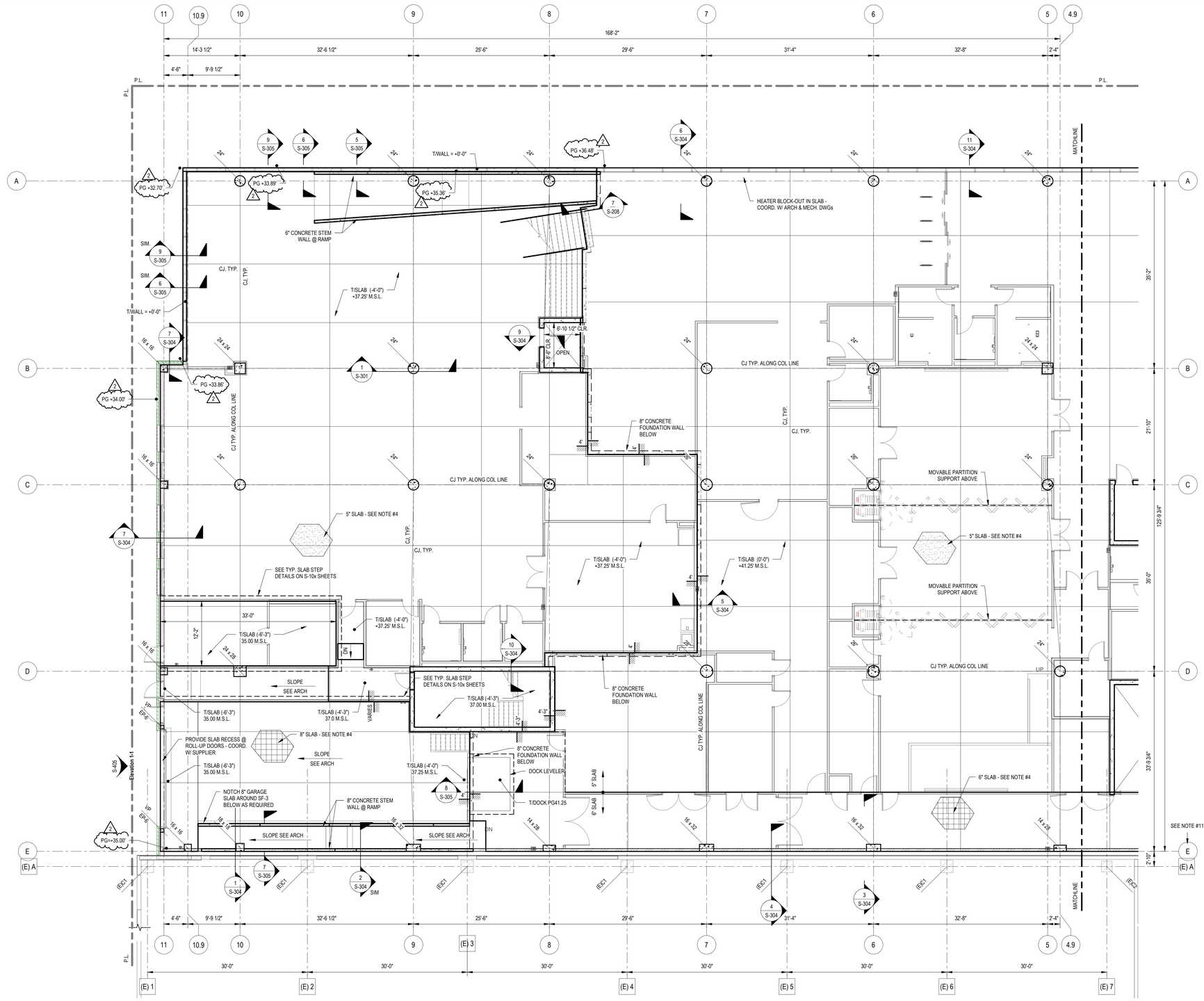

LEVEL U1 & LEVEL 1 SLAB-ON-GRADE PLAN - AREA A

SCALE: 1/8" = 1'-0"

FOUNDATION & SLAB ON GRADE LEGEND

- S.F. — INDICATES STEP FOOTING - SEE S-10 SHEETS FOR TYPICAL DETAILS
- CJ / C3 — INDICATES CONCRETE SLAB CONTRACTION JOINTS. SEE S-10 SHEETS FOR TYPICAL DETAILS. SEE PLAN FOR LOCATIONS. MAXIMUM SPACING = 12' IN EACH DIRECTION
- SIZE — INDICATES CONCRETE COLUMN - SEE SCHEDULE ON S-60 SHEETS
- SIZE / BP# — HSS STEEL COLUMN - SEE PLAN FOR SIZE AND LOCATION SEE S3.0 SHEETS FOR BASE PLATE DETAILS (BP-x)
- VP — HSS7X7X1/4 VENEER POST
- 0 — GRID DESIGNATION FOR CENTERLINE OF COLUMN U.N.O.
- (E) 0 — EXISTING PARKING DECK GRID LINE
- INDICATES SLAB DEPRESSION - SEE PLAN COORDINATE EXACT LIMITS W/ ARCH. & PLUMBING DWGs & SEE S-10 SHEETS FOR TYPICAL SLAB DEPRESSION DETAILS
- F.D. — FLOOR DRAIN - COORDINATE W/ PLUMBING DWGs
- P.L. — INDICATES PROPERTY LINE
- INDICATES MATCH LINE
- CONCRETE PILE CAP - SEE PLAN & SCHEDULE THIS SHEET. SEE DETAILS ON S3.02
- INDICATES GRAVITY PILES SEE S-301
- INDICATES UPLIFT PILES SEE S-301
- GB-X — CONCRETE GRADE BEAM SEE SCHEDULE THIS SHEET
- INV = X.XX — UNDERGROUND PLUMBING LINES - COORDINATE WITH PLUMBING DWGs
- E.J. — BUILDING EXPANSION JOINT LOCATION = SEE S-10 SHEETS FOR TYPICAL DETAILS
- INDICATES GRAVITY SEWER LINES
- PG = X'-X" — INDICATES PROPOSED FINISHED GRADE ELEVATION (MSL) COORDINATE WITH CIVIL & ARCH PLANS
- Px — INDICATES CONCRETE PIER (x-x) INDICATES TOP OF PIER ELEVATION FROM DATUM SEE S-305

FOUNDATION & SLAB ON GRADE PLAN NOTES

1. SEE S-10 SHEETS FOR ADDITIONAL GENERAL NOTES, MATERIAL NOTES AND MATERIAL SPECIFICATIONS. ALSO, SEE S-10 SHEETS FOR TYPICAL DETAILS. TYPICAL DETAILS ARE GENERALLY NOT SHOWN ON PLAN BUT RATHER ARE INTENDED TO DEFINE TYPICAL CONSTRUCTION CONDITIONS.
2. DATUM ELEVATION = TOP OF SLAB ELEVATION = ASSUMED EL'-0" = 41.25' M.S.L. OTHER ELEVATIONS ARE NOTED AS (+ OR -) FROM DATUM ELEVATION. SEE FLOOR ELEVATION TABLE SHEET S-103 FOR TYPICAL SLAB ELEVATIONS.
3. TOP OF PILE CAPS SHALL BE (-1'-4") FROM DATUM ELEVATION, U.N.O.
4. INTERIOR TROWEL FINISHED SLAB-ON-GRADE (THICKNESS SPECIFIED ON PLAN) 3000 psi CONCRETE REINFORCED WITH 3.0lbs/yd.³ OF SYNTHETIC MACRO-FIBERS (TUF-STRAND SF BY EUCLID, FIBER MAC SERIES BY BASF, OR FORTA-FERRO BY FORTA CORP, OR APPROVED EQUAL) ON 15 mil VAPOR RETARDER, ON 6" CLEAN SANDS WITH LESS THAN 20% FINES PASSING #100 SIEVE (SP,SW,SP-SM) OR APPROVED EQUAL ON WELL COMPACTED SUB GRADE. EXTERIOR AND BROOM FINISHED SLABS ON GRADE (THICKNESS SPECIFIED ON PLAN) 4,000 psi CONCRETE REINFORCED WITH WWF6X6XW2.9XW2.9 FLAT SHEETS ON 10 MIL VAPOR BARRIER ON 6" CLEAN SANDS ON COMPACTED SUB-GRADE. TRUCK LOADING BAY SHALL BE 8", 5,000 psi CONCRETE WITH #4 @16"o.c. EACH WAY, TYP.
5. REFER TO ARCHITECTURAL, MECHANICAL, ELECTRICAL, PLUMBING, AND OTHER DISCIPLINE DRAWINGS FOR OPENINGS AND DEPRESSIONS NOT SHOWN ON THESE DRAWINGS.
6. RELOCATE ANY UTILITY LINES THAT CONFLICT WITH THE FOUNDATIONS OR DROP THE FOUNDATIONS TO AN ELEVATION BELOW THE PROPOSED UTILITIES. RELOCATE ANY GRAVITY FLOW LINES THAT CONFLICT WITH SPREAD FOOTINGS AS SHOWN ON STRUCTURAL FOUNDATION PLANS. IF A GRAVITY FLOW LINE TRAVELS UNDER A CONTINUOUS STRIP FOOTING EITHER:
   a. DROP THE FOOTING ELEVATION BELOW THE PROPOSED LINE.
   b. IF THE UTILITY LINE IS < 2'-0" BELOW THE STRIP FOOTING, THEN ENCASE THE LINE IN A STEEL PIPE 2" LARGER IN DIAMETER THAN THE LINE AND EXTEND THE PIPE 1'-0" PAST EACH SIDE OF THE CONCRETE FOOTING. BACKFILL THE TRENCH WITH #57 STONE. THE BEARING CAPACITY OF THIS AREA MUST MEET OR EXCEED THE ALLOWABLE SOIL BEARING CAPACITY.
   c. IF THE UTILITY LINE IS ≥ 2'-0" BELOW BOTTOM OF FOOTING, THEN STEEL PIPE IS NOT REQUIRED. BACKFILL THE TRENCH WITH #57 STONE. THE BEARING CAPACITY OF THIS AREA MUST MEET OR EXCEED THE ALLOWABLE SOIL BEARING CAPACITY.
7. DIMENSIONS ARE FROM EDGE OF SLAB (E.O.S.) AND OUTSIDE FACE OF STUD (O.F.S.) / CURTAINWALL (O.F.CW.) TO COLUMN CENTERLINE UNLESS NOTED OTHERWISE.
8. S.F. = STEP FOOTING, SEE TYPICAL DETAIL ON S-10 SHEETS, G.C. TO COORDINATE STEPS IN FOUNDATION FOR PLUMBING, ELECTRICAL AND MECHANICAL.
9. SEE S-60 SHEETS FOR CONCRETE COLUMN SCHEDULE.
10. WHEN A SECTION IS CUT OR A DETAIL IS LABELED FOR A PARTICULAR CONDITION, THAT SECTION OR DETAIL SHALL APPLY FOR ALL SIMILAR CONDITIONS REGARDLESS OF WHETHER CUT OR LABELED, U.N.O.
11. GRID E DESIGNATES OUTSIDE FACE OF COLUMN AND SOUTH FACING EDGE OF SLAB.

NEW HANOVER COUNTY • NORTH CAROLINA • ESTABLISHED 1729

CFD Cape Fear Development

LS3P

101 NORTH THIRD STREET, SUITE 500
WILMINGTON, NORTH CAROLINA 28401
TEL. 910.790.3111 FAX. 910.790.9901
WWW.LS3P.COM

WOODS ENGINEERING Consulting Structural Engineers

254 North Front Street Phone: 910.343.8007
Suite 201 Fax: 910.343.8088
Wilmington, N.C. 28401 www.woodseng.com

WOODS ENGINEERING, P.A. CORPORATE SEAL No. C-1806 NORTH CAROLINA

NORTH CAROLINA PROFESSIONAL ENGINEER SEAL 19475 RON R. WOODS

COPYRIGHT 2023 ALL RIGHTS RESERVED. PRINTED OR ELECTRONIC DRAWINGS AND DOCUMENTATION MAY NOT BE REPRODUCED IN ANY FORM WITHOUT WRITTEN PERMISSION FROM LS3P ASSOCIATES LTD.

Project Grace

Grace Street
Wilmington, NC 28401

LS3P PROJECT: 7701-177600
WOODS PROJECT: 21-3351

Δ	DATE	DESCRIPTION
0	2023.05.22	PERMIT SET
2	2023.06.22	ADDENDUM #2

SHEET NAME:
SLAB ON GRADE PLAN - AREA A

ORIG SUBMISSION: 2023.05.22

SHEET: S-201A

PERMIT SET

TRUE NORTH PROJECT NORTH

6/21/2023 11:38:29 AM

THE LINE SHOWN ABOVE IS EXACTLY ONE INCH LONG ON ARCH D SHEETS ORIGINAL PAGE SIZE

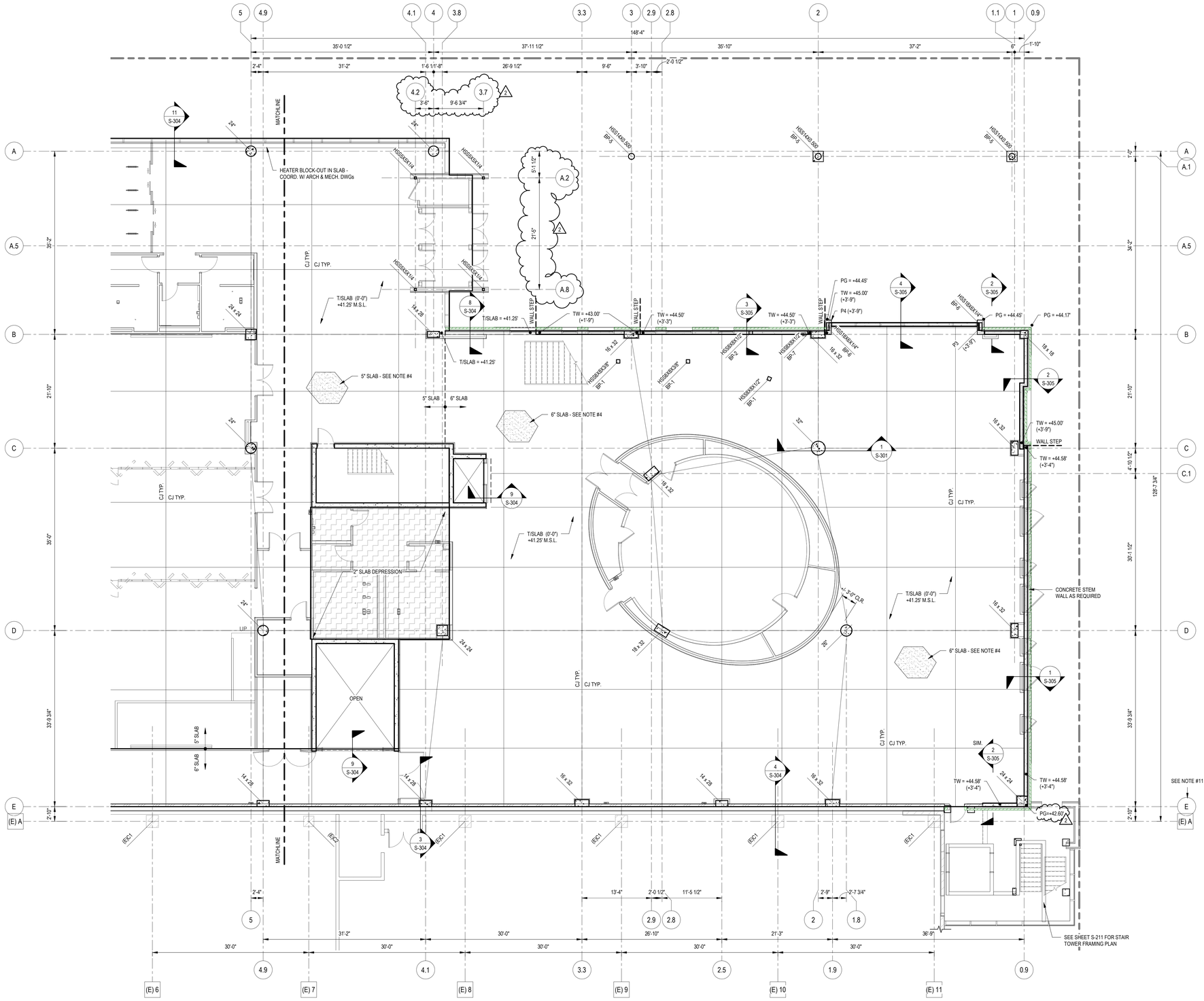

LEVEL 1 SLAB-ON-GRADE PLAN - AREA B

SCALE: 1/8" = 1'-0"

FOUNDATION & SLAB ON GRADE LEGEND

- S.F. — INDICATES STEP FOOTING - SEE S-10 SHEETS FOR TYPICAL DETAILS
- CJ / C3 — INDICATES CONCRETE SLAB CONTRACTION JOINTS, SEE S-10 SHEETS FOR TYPICAL DETAILS. SEE PLAN FOR LOCATIONS. MAXIMUM SPACING = 12' IN EACH DIRECTION
- SIZE — INDICATES CONCRETE COLUMN - SEE SCHEDULE ON S-60 SHEETS
- SIZE / BP-x — HSS STEEL COLUMN - SEE PLAN FOR SIZE AND LOCATION SEE S3.0 SHEETS FOR BASE PLATE DETAILS (BP-x)
- VP — HSS7X7X1/4 VENEER POST
- 0 — GRID DESIGNATION FOR CENTERLINE OF COLUMN U.N.O.
- (E) 0 — EXISTING PARKING DECK GRID LINE
- INDICATES SLAB DEPRESSION - SEE PLAN COORDINATE EXACT LIMITS W/ ARCH. & PLUMBING DWGs & SEE S-10 SHEETS FOR TYPICAL SLAB DEPRESSION DETAILS
- F.D. — FLOOR DRAIN - COORDINATE W/ PLUMBING DWGs
- P.L. — INDICATES PROPERTY LINE
- INDICATES MATCH LINE
- CONCRETE PILE CAP - SEE PLAN & SCHEDULE THIS SHEET. SEE DETAILS ON S3.02
- INDICATES GRAVITY PILES SEE S-301
- INDICATES UPLIFT PILES SEE S-301
- GB-X — CONCRETE GRADE BEAM SEE SCHEDULE THIS SHEET
- INV = X.XX — UNDERGROUND PLUMBING LINES - COORDINATE WITH PLUMBING DWGs
- E.J. — BUILDING EXPANSION JOINT LOCATION = SEE S-10 SHEETS FOR TYPICAL DETAILS
- INDICATES GRAVITY SEWER LINES
- PG = X'-X" — INDICATES PROPOSED FINISHED GRADE ELEVATION (MSL) COORDINATE WITH CIVIL & ARCH PLANS
- Px — INDICATES CONCRETE PIER (x-x) INDICATES TOP OF PIER ELEVATION FROM DATUM SEE S-305

FOUNDATION & SLAB ON GRADE PLAN NOTES

1. SEE S-10 SHEETS FOR ADDITIONAL GENERAL NOTES, MATERIAL NOTES AND MATERIAL SPECIFICATIONS. ALSO, SEE S-10 SHEETS FOR TYPICAL DETAILS. TYPICAL DETAILS ARE GENERALLY NOT SHOWN ON PLAN BUT RATHER ARE INTENDED TO DEFINE TYPICAL CONSTRUCTION CONDITIONS.
2. DATUM ELEVATION = TOP OF SLAB ELEVATION = ASSUMED 0'-0" = 41.25' M.S.L. OTHER ELEVATIONS ARE NOTED AS (+ OR -) FROM DATUM ELEVATION. SEE FLOOR ELEVATION TABLE SHEET S-103 FOR TYPICAL SLAB ELEVATIONS.
3. TOP OF PILE CAPS SHALL BE (-1'-4") FROM DATUM ELEVATION, U.N.O.
4. INTERIOR TROWEL FINISHED SLAB-ON-GRADE (THICKNESS SPECIFIED ON PLAN) 3000 psi CONCRETE REINFORCED WITH 3.0lbs/yd.³ OF SYNTHETIC MACRO-FIBERS (TUF-STRAND SF BY EUCLID, FIBER MAC SERIES BY BASF, OR FORTA-FERRO BY FORTA CORP, OR APPROVED EQUAL) ON 15 mil VAPOR RETARDER, ON 6" CLEAN SANDS WITH LESS THAN 20% FINES PASSING #100 SIEVE (SP,SW,SP-SM) OR APPROVED EQUAL ON WELL COMPACTED SUB GRADE. EXTERIOR AND BROOM FINISHED SLABS ON GRADE (THICKNESS SPECIFIED ON PLAN) 4,000 psi CONCRETE REINFORCED WITH WWF6X6XW2.9XW2.9 FLAT SHEETS ON 10 MIL VAPOR BARRIER ON 6" CLEAN SANDS ON COMPACTED SUB-GRADE. TRUCK LOADING BAY SHALL BE 8", 5,000 psi CONCRETE WITH #4 @16"o.c. EACH WAY, TYP.
5. REFER TO ARCHITECTURAL, MECHANICAL, ELECTRICAL, PLUMBING, AND OTHER DISCIPLINE DRAWINGS FOR OPENINGS AND DEPRESSIONS NOT SHOWN ON THESE DRAWINGS.
6. RELOCATE ANY UTILITY LINES THAT CONFLICT WITH THE FOUNDATIONS OR DROP THE FOUNDATIONS TO AN ELEVATION BELOW THE PROPOSED UTILITIES. RELOCATE ANY GRAVITY FLOW LINES THAT CONFLICT WITH SPREAD FOOTINGS AS SHOWN ON STRUCTURAL FOUNDATION PLANS. IF A GRAVITY FLOW LINE TRAVELS UNDER A CONTINUOUS STRIP FOOTING EITHER:
   a. DROP THE FOOTING ELEVATION BELOW THE PROPOSED LINE.
   b. IF THE UTILITY LINE IS < 2'-0" BELOW THE STRIP FOOTING, THEN ENCASE THE LINE IN A STEEL PIPE 2" LARGER IN DIAMETER THAN THE LINE AND EXTEND THE PIPE 1'-0" PAST EACH SIDE OF THE CONCRETE FOOTING. BACKFILL THE TRENCH WITH #57 STONE. THE BEARING CAPACITY OF THIS AREA MUST MEET OR EXCEED THE ALLOWABLE SOIL BEARING CAPACITY.
   c. IF THE UTILITY LINE IS ≥ 2'-0" BELOW BOTTOM OF FOOTING, THEN STEEL PIPE IS NOT REQUIRED. BACKFILL THE TRENCH WITH #57 STONE. THE BEARING CAPACITY OF THIS AREA MUST MEET OR EXCEED THE ALLOWABLE SOIL BEARING CAPACITY.
7. DIMENSIONS ARE FROM EDGE OF SLAB (E.O.S.) AND OUTSIDE FACE OF STUD (O.F.S.) / CURTAINWALL (O.F.CW.) TO COLUMN CENTERLINE UNLESS NOTED OTHERWISE.
8. S.F. = STEP FOOTING, SEE TYPICAL DETAIL ON S-10 SHEETS. G.C. TO COORDINATE STEPS IN FOUNDATION FOR PLUMBING, ELECTRICAL AND MECHANICAL.
9. SEE S-60 SHEETS FOR CONCRETE COLUMN SCHEDULE.
10. WHEN A SECTION IS CUT OR A DETAIL IS LABELED FOR A PARTICULAR CONDITION, THAT SECTION OR DETAIL SHALL APPLY FOR ALL SIMILAR CONDITIONS REGARDLESS OF WHETHER CUT OR LABELED, U.N.O.
11. GRID E DESIGNATES OUTSIDE FACE OF COLUMN AND SOUTH FACING EDGE OF SLAB.

TRUE NORTH PROJECT NORTH

NEW HANOVER COUNTY • NORTH CAROLINA • ESTABLISHED 1729

CFD Cape Fear Development

LS3P

101 NORTH THIRD STREET, SUITE 500
WILMINGTON, NORTH CAROLINA 28401
TEL. 910.790.3111 FAX. 910.790.9901
WWW.LS3P.COM

WOODS ENGINEERING Consulting Structural Engineers

254 North Front Street Phone: 910.343.8007
Suite 201 Fax: 910.343.8088
Wilmington, N.C. 28401 www.woodseng.com

WOODS ENGINEERING, P.A. CORPORATE SEAL No. C-1806 NORTH CAROLINA

NORTH CAROLINA PROFESSIONAL SEAL 19475 ENGINEER RON R. WOODS

COPYRIGHT 2023 ALL RIGHTS RESERVED. PRINTED OR ELECTRONIC DRAWINGS AND DOCUMENTATION MAY NOT BE REPRODUCED IN ANY FORM WITHOUT WRITTEN PERMISSION FROM LS3P ASSOCIATES LTD.

Project Grace

Grace Street
Wilmington, NC 28401

LS3P PROJECT: 7701-177600
WOODS PROJECT: 21-3351

Δ	DATE	DESCRIPTION
0	2023.05.22	PERMIT SET
2	2023.06.22	ADDENDUM #2

SHEET NAME:
SLAB ON GRADE PLAN - AREA B

ORIG SUBMISSION: 2023.05.22

SHEET: **S-201B**

PERMIT SET

6/21/2023 11:38:37 AM

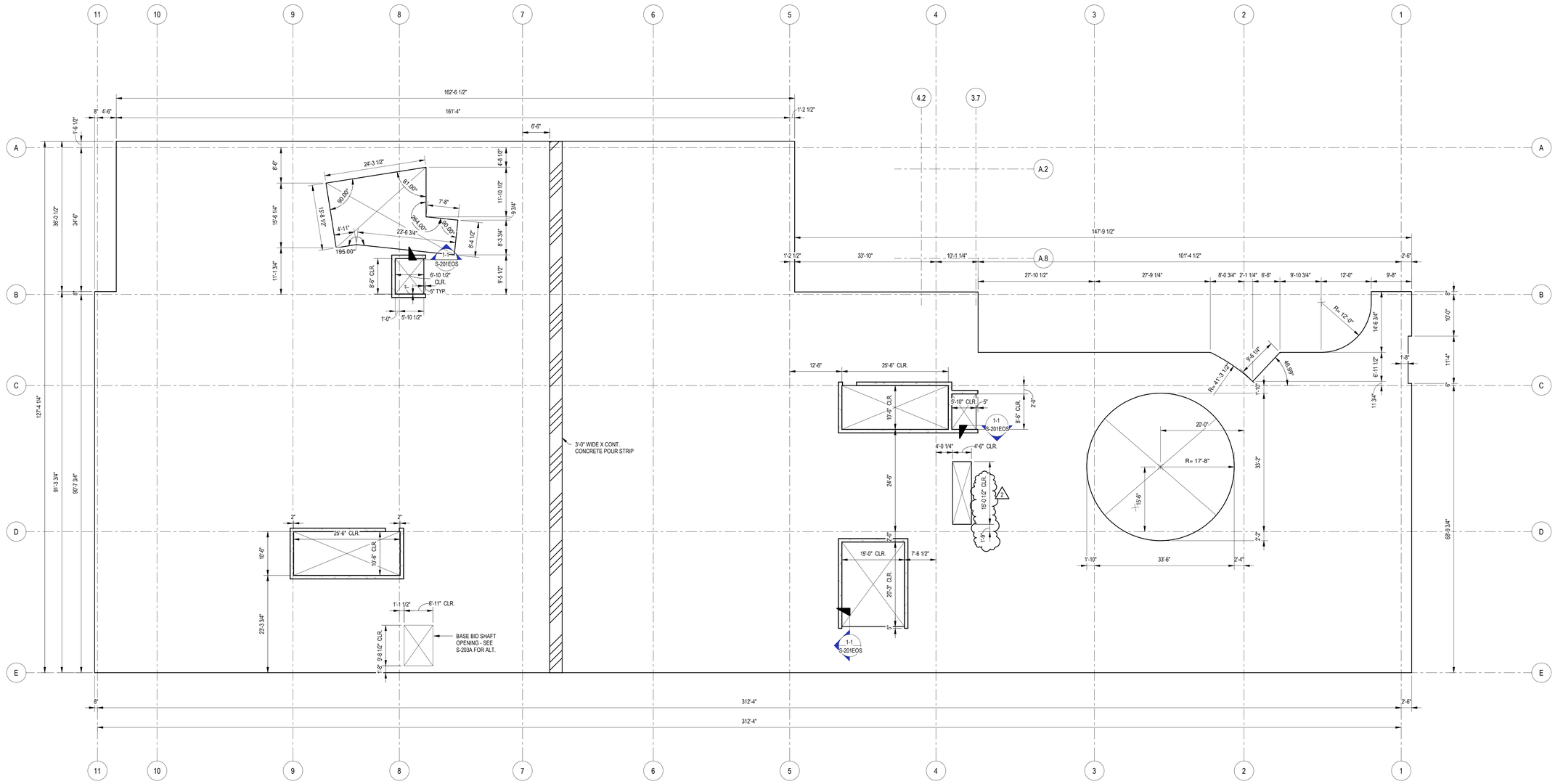

SECOND FLOOR EDGE OF SLAB PLAN

SCALE: 3/32" = 1'-0"

THE LINE SHOWN ABOVE IS EXACTLY ONE INCH LONG ON ORIGINAL PLOT SIZE

6/21/2023 11:38:40 AM

NEW HANOVER COUNTY • NORTH CAROLINA • ESTABLISHED 1729

CFD Cape Fear Development

LS3P

101 NORTH THIRD STREET, SUITE 500
WILMINGTON, NORTH CAROLINA 28401
TEL. 910.790.3111 FAX. 910.790.9901
WWW.LS3P.COM

WOODS ENGINEERING Consulting Structural Engineers

254 North Front Street Phone: 910.343.8007
Suite 201 Fax: 910.343.8088
Wilmington, N.C. 28401 www.woodseng.com

WOODS ENGINEERING, P.A. CORPORATE SEAL No. C-1806 NORTH CAROLINA

NORTH CAROLINA PROFESSIONAL ENGINEER SEAL 19475 RON R. WOODS

COPYRIGHT 2023 ALL RIGHTS RESERVED. PRINTED OR ELECTRONIC DRAWINGS AND DOCUMENTATION MAY NOT BE REPRODUCED IN ANY FORM WITHOUT WRITTEN PERMISSION FROM LS3P ASSOCIATES LTD.

Project Grace

Grace Street
Wilmington, NC 28401

LS3P PROJECT: 7701-177600
WOODS PROJECT: 21-3351

Δ	DATE	DESCRIPTION
0	2023.05.22	PERMIT SET
2	2023.06.22	ADDENDUM #2

SHEET NAME:
SECOND FLOOR EDGE OF SLAB PLAN

ORIG SUBMISSION: 2023.05.22

TRUE NORTH PROJECT NORTH

SHEET:
S-202 EOS

PERMIT SET

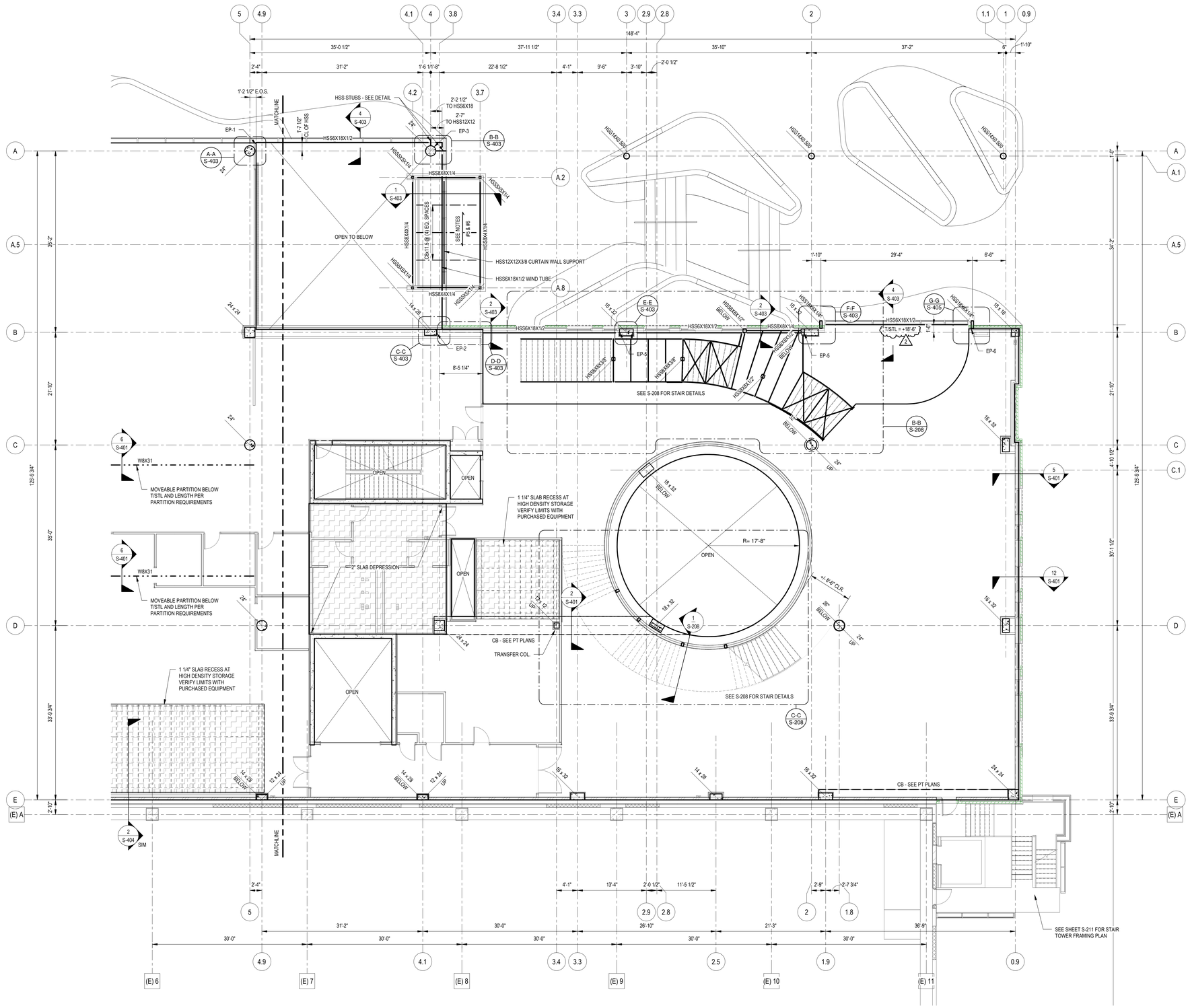

FLOOR FRAMING LEGEND

- INDICATES 10" CONCRETE SHEAR WALLS ABOVE - SEE NOTES AND DETAILS ON S-10 & S-50 SHEETS
- INDICATES 8" CMU WALL SEE PLAN FOR REQUIREMENTS
- INDICATES 6" METAL STUD WALL
- MHx — MASONRY HEADER SEE SCHEDULE THIS SHEET
- SIZE — INDICATES CONCRETE COLUMN - SEE SCHEDULE ON S-60 SHEETS
- SIZE — INDICATES CONCRETE COLUMN BELOW
- SIZE — INDICATES HSS POST - SEE PLAN
- 0 — GRID DESIGNATION FOR CENTERLINE OF COLUMN
- (E) 0 — EXISTING PARKING DECK GRID LINE
- CBx — CONCRETE BEAM - SEE PT PLANS & S-60 SHEETS
- INDICATES SLAB DEPRESSION - SEE PLAN COORDINATE EXACT LIMITS W/ ARCH. & PLUMBING DWGs
- INDICATES CONCRETE POUR STRIP - SEE PLAN
- INDICATES JOIST - SEE PLAN FOR SIZE AND SPACING
- INDICATES WF PARTITION BEAM - SEE PLAN FOR SIZE & LOCATION

FLOOR FRAMING PLAN NOTES

1. SEE S1.0 SHEETS FOR ADDITIONAL GENERAL NOTES, MATERIAL NOTES AND MATERIAL SPECIFICATIONS. ALSO, SEE S1.0 SHEETS FOR TYPICAL DETAILS. TYPICAL DETAILS ARE GENERALLY NOT SHOWN ON PLAN BUT RATHER ARE INTENDED TO DEFINE TYPICAL CONSTRUCTION CONDITIONS.
2. SEE FLOOR ELEVATION TABLE SHEET S-103 FOR TYPICAL SLAB ELEVATIONS.
3. TYPICAL FLOOR SLAB SYSTEM IS 14" PT CONCRETE FLAT PLATE U.N.O. - SEE PT SHEETS FOR ADDITIONAL INFORMATION.
4. WHEN A SECTION IS CUT OR A DETAIL IS LABELED FOR A PARTICULAR CONDITION, THAT SECTION OR DETAIL SHALL APPLY FOR ALL SIMILAR CONDITIONS REGARDLESS OF WHETHER CUT OR LABELED, U.N.O.
5. TYPICAL ROOF DECK IS 11/2" DEEP, 20 ga., GALVANIZED, TYPE 'B' METAL ROOF DECK.
6. METAL ROOF DECK SHALL BE ATTACHED TO SUPPORTING HSS MEMBERS WITH HILTI X-HSN 24 FOR STEEL THICKNESS EQUAL TO OR LESS THAN 3/8" AND HILTI X-ENP 19 OTHERWISE IN A 36/4 PATTERN U.N.O. ON PLAN - ATTACH METAL DECK TO LIGHT GAUGE FRAMING WITH #10 TEK SCREWS IN A 36/4 PATTERN.

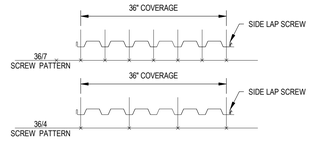

SECOND FLOOR FRAMING PLAN - AREA B

SCALE: 1/8" = 1'-0"

NEW HANOVER COUNTY • NORTH CAROLINA • ESTABLISHED 1729

CFD Cape Fear Development

LS3P

101 NORTH THIRD STREET, SUITE 500
WILMINGTON, NORTH CAROLINA 28401
TEL. 910.790.3111 FAX. 910.790.9901
WWW.LS3P.COM

WOODS ENGINEERING Consulting Structural Engineers

254 North Front Street Phone: 910.343.8007
Suite 201 Fax: 910.343.8088
Wilmington, N.C. 28401 www.woodseng.com

WOODS ENGINEERING, P.A. CORPORATE SEAL No. C-1806 NORTH CAROLINA

NORTH CAROLINA PROFESSIONAL ENGINEER SEAL 19475 RON R. WOODS

COPYRIGHT 2023 ALL RIGHTS RESERVED. PRINTED OR ELECTRONIC DRAWINGS AND DOCUMENTATION MAY NOT BE REPRODUCED IN ANY FORM WITHOUT WRITTEN PERMISSION FROM LS3P ASSOCIATES LTD.

Project Grace

Grace Street
Wilmington, NC 28401

LS3P PROJECT: 7701-177600
WOODS PROJECT: 21-3351

Δ	DATE	DESCRIPTION
0	2023.05.22	PERMIT SET
2	2023.06.22	ADDENDUM #2

SHEET NAME: SECOND FLOOR FRAMING PLAN - AREA B

ORIG SUBMISSION: 2023.05.22

SHEET: S-202B

PERMIT SET

TRUE NORTH PROJECT NORTH

6/21/2023 12:04:55 PM

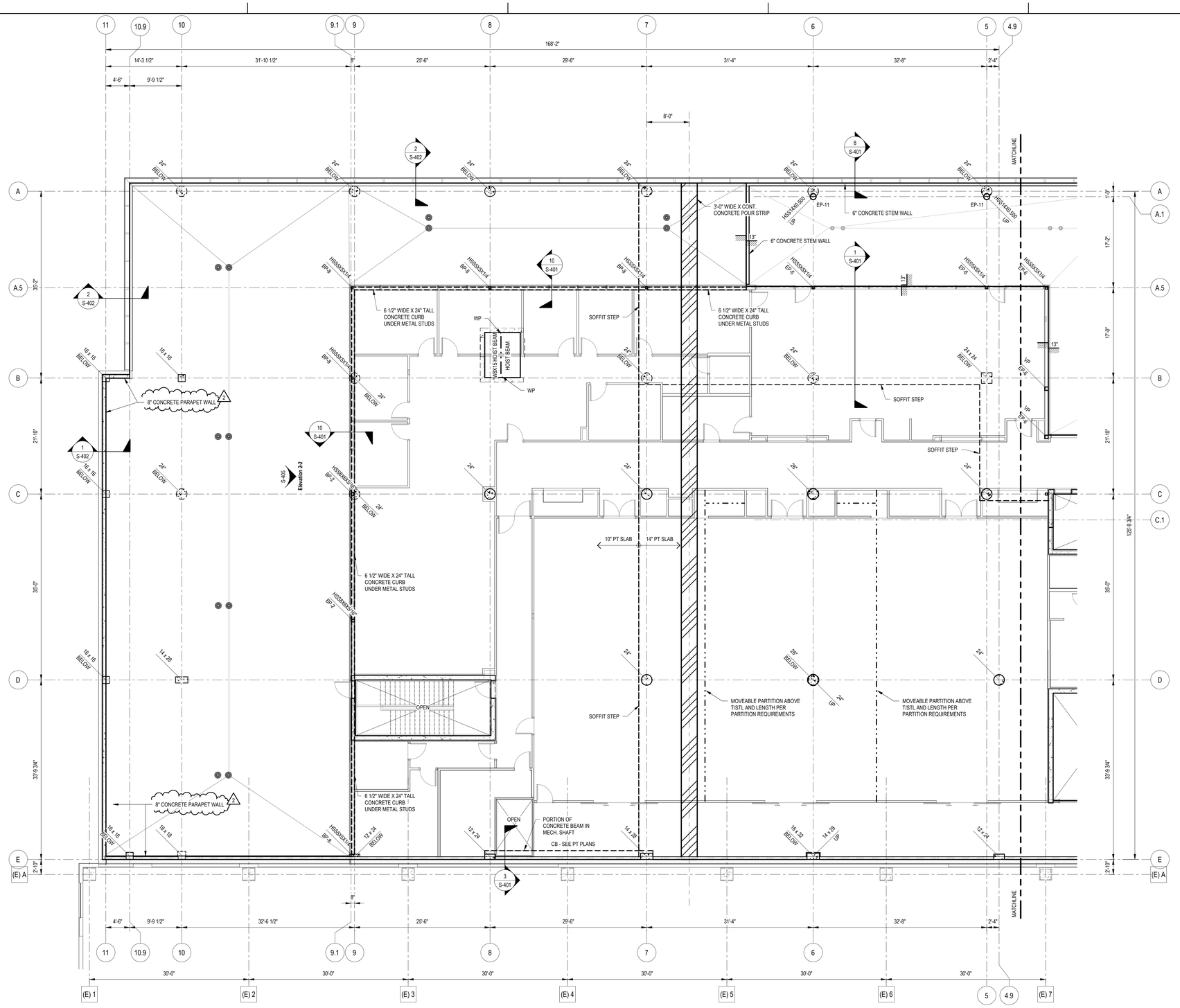

THIRD FLOOR FRAMING PLAN - AREA A

SCALE: 1/8" = 1'-0"

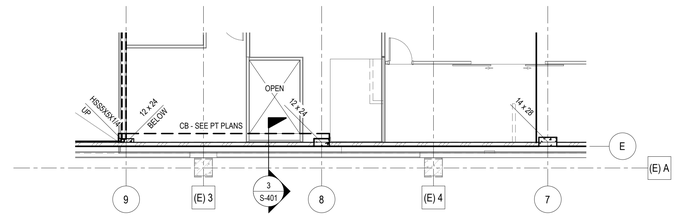

THIRD FLOOR FRAMING PLAN - AREA A ALT.

SCALE: 1/8" = 1'-0"

TRUE NORTH PROJECT NORTH

FLOOR FRAMING LEGEND

- INDICATES 10" CONCRETE SHEAR WALLS ABOVE - SEE NOTES AND DETAILS ON S-10 & S-50 SHEETS
- INDICATES 8" CMU WALL SEE PLAN FOR REQUIREMENTS
- INDICATES 6" METAL STUD WALL
- MHx — MASONRY HEADER SEE SCHEDULE THIS SHEET
- SIZE — INDICATES CONCRETE COLUMN - SEE SCHEDULE ON S-60 SHEETS
- SIZE — INDICATES CONCRETE COLUMN BELOW
- SIZE — INDICATES HSS POST - SEE PLAN
- 0 — GRID DESIGNATION FOR CENTERLINE OF COLUMN
- (E) 0 — EXISTING PARKING DECK GRID LINE
- CBx — CONCRETE BEAM - SEE PT PLANS & S-60 SHEETS
- INDICATES SLAB DEPRESSION - SEE PLAN COORDINATE EXACT LIMITS W/ ARCH. & PLUMBING DWGs
- INDICATES CONCRETE POUR STRIP - SEE PLAN
- INDICATES JOIST - SEE PLAN FOR SIZE AND SPACING
- INDICATES WF PARTITION BEAM - SEE PLAN FOR SIZE & LOCATION

FLOOR FRAMING PLAN NOTES

1. SEE S1.0 SHEETS FOR ADDITIONAL GENERAL NOTES, MATERIAL NOTES AND MATERIAL SPECIFICATIONS. ALSO, SEE S1.0 SHEETS FOR TYPICAL DETAILS. TYPICAL DETAILS ARE GENERALLY NOT SHOWN ON PLAN BUT RATHER ARE INTENDED TO DEFINE TYPICAL CONSTRUCTION CONDITIONS.
2. SEE FLOOR ELEVATION TABLE SHEET S-103 FOR TYPICAL SLAB ELEVATIONS.
3. TYPICAL FLOOR SLAB SYSTEM IS 14" & 10" PT CONCRETE FLAT PLATE U.N.O. - SEE PT SHEETS FOR ADDITIONAL INFORMATION.
4. WHEN A SECTION IS CUT OR A DETAIL IS LABELED FOR A PARTICULAR CONDITION, THAT SECTION OR DETAIL SHALL APPLY FOR ALL SIMILAR CONDITIONS REGARDLESS OF WHETHER CUT OR LABELED, U.N.O.

LS3P
101 NORTH THIRD STREET, SUITE 500
WILMINGTON, NORTH CAROLINA 28401
TEL. 910.790.3111 FAX. 910.790.9901
WWW.LS3P.COM

WOODS ENGINEERING Consulting Structural Engineers
254 North Front Street Phone: 910.343.8007
Suite 201 Fax: 910.343.8088
Wilmington, N.C. 28401 www.woodseng.com

COPYRIGHT 2023 ALL RIGHTS RESERVED. PRINTED OR ELECTRONIC DRAWINGS AND DOCUMENTATION MAY NOT BE REPRODUCED IN ANY FORM WITHOUT WRITTEN PERMISSION FROM LS3P ASSOCIATES LTD.

Project Grace

Grace Street
Wilmington, NC 28401

LS3P PROJECT: 7701-177600
WOODS PROJECT: 21-3351

Δ	DATE	DESCRIPTION
0	2023.05.22	PERMIT SET
2	2023.06.22	ADDENDUM #2

SHEET NAME: THIRD FLOOR FRAMING PLAN - AREA A

ORIG SUBMISSION: 2023.05.22

SHEET: S-203A

PERMIT SET

6/21/2023 12:05:01 PM

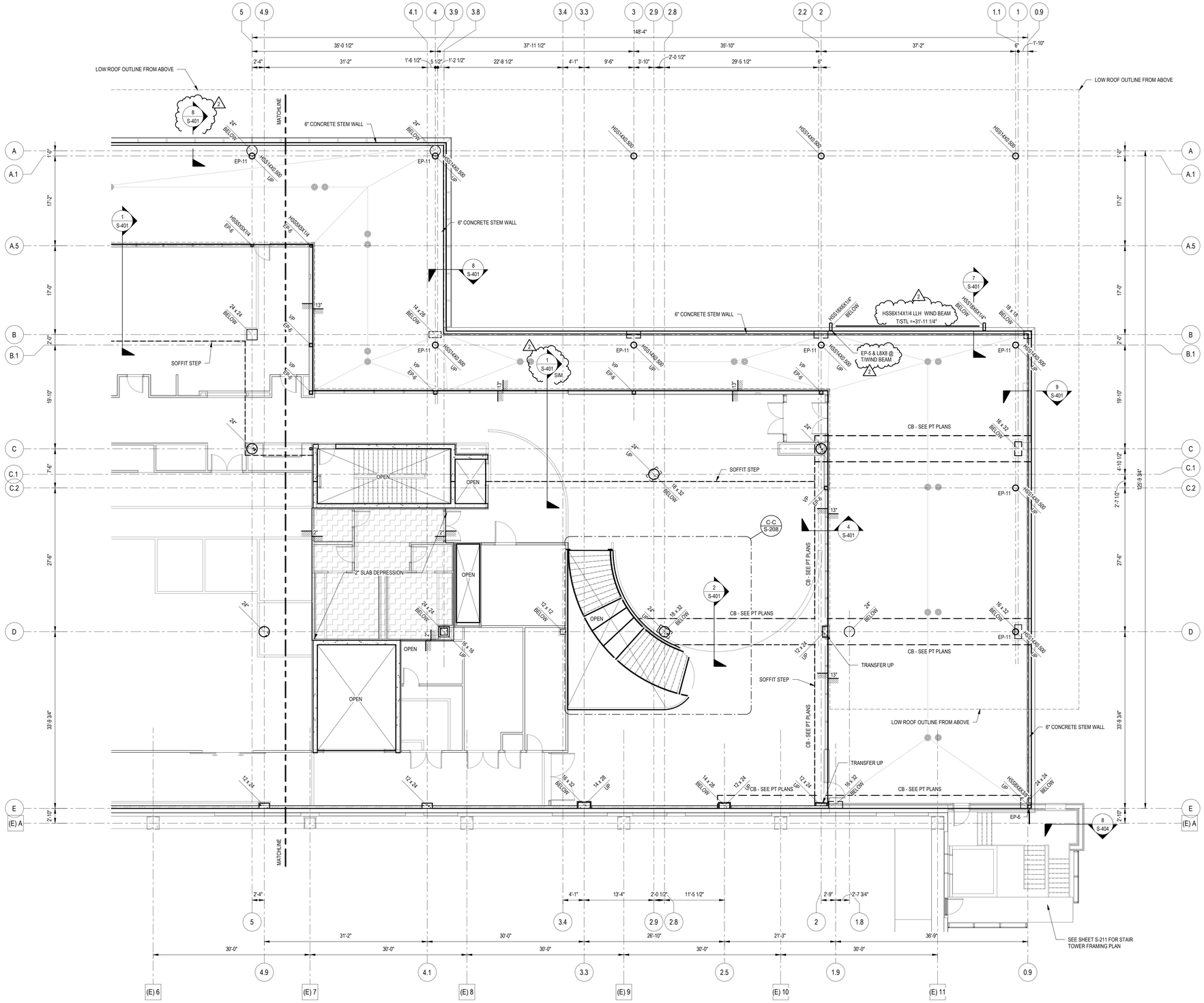

THIRD FLOOR FRAMING PLAN - AREA B

SCALE: 1/8" = 1'-0"

FLOOR FRAMING LEGEND

- INDICATES 10" CONCRETE SHEAR WALLS ABOVE - SEE NOTES AND DETAILS ON S-10 & S-50 SHEETS
- INDICATES 8" CMU WALL SEE PLAN FOR REQUIREMENTS
- INDICATES 6" METAL STUD WALL
- MHx — MASONRY HEADER SEE SCHEDULE THIS SHEET
- SIZE — INDICATES CONCRETE COLUMN - SEE SCHEDULE ON S-60 SHEETS
- SIZE — INDICATES CONCRETE COLUMN BELOW
- SIZE — INDICATES HSS POST - SEE PLAN
- 0 — GRID DESIGNATION FOR CENTERLINE OF COLUMN
- (E) 0 — EXISTING PARKING DECK GRID LINE
- CBx — CONCRETE BEAM - SEE PT PLANS & S-60 SHEETS
- INDICATES SLAB DEPRESSION - SEE PLAN COORDINATE EXACT LIMITS W/ ARCH. & PLUMBING DWGs
- INDICATES CONCRETE POUR STRIP - SEE PLAN
- INDICATES JOIST - SEE PLAN FOR SIZE AND SPACING
- INDICATES WF PARTITION BEAM - SEE PLAN FOR SIZE & LOCATION

FLOOR FRAMING PLAN NOTES

1. SEE S1.0 SHEETS FOR ADDITIONAL GENERAL NOTES, MATERIAL NOTES AND MATERIAL SPECIFICATIONS. ALSO, SEE S1.0 SHEETS FOR TYPICAL DETAILS. TYPICAL DETAILS ARE GENERALLY NOT SHOWN ON PLAN BUT RATHER ARE INTENDED TO DEFINE TYPICAL CONSTRUCTION CONDITIONS.
2. SEE FLOOR ELEVATION TABLE SHEET S-103 FOR TYPICAL SLAB ELEVATIONS.
3. TYPICAL FLOOR SLAB SYSTEM IS 14" & 10" PT CONCRETE FLAT PLATE U.N.O. - SEE PT SHEETS FOR ADDITIONAL INFORMATION.
4. WHEN A SECTION IS CUT OR A DETAIL IS LABELED FOR A PARTICULAR CONDITION, THAT SECTION OR DETAIL SHALL APPLY FOR ALL SIMILAR CONDITIONS REGARDLESS OF WHETHER CUT OR LABELED, U.N.O.

NEW HANOVER COUNTY, NORTH CAROLINA ESTABLISHED 1729

CFD Cape Fear Development

LS3P

101 NORTH THIRD STREET, SUITE 500
WILMINGTON, NORTH CAROLINA 28401
TEL. 910.790.3111 FAX. 910.790.9901
WWW.LS3P.COM

WOODS ENGINEERING Consulting Structural Engineers

254 North Front Street Phone: 910.343.8007
Suite 201 Fax: 910.343.8088
Wilmington, N.C. 28401 www.woodseng.com

WOODS ENGINEERING, P.A. CORPORATE SEAL No. C-1806 NORTH CAROLINA

NORTH CAROLINA PROFESSIONAL ENGINEER SEAL 19475 RON R. WOODS

COPYRIGHT 2023 ALL RIGHTS RESERVED. PRINTED OR ELECTRONIC DRAWINGS AND DOCUMENTATION MAY NOT BE REPRODUCED IN ANY FORM WITHOUT WRITTEN PERMISSION FROM LS3P ASSOCIATES LTD.

Project Grace

Grace Street
Wilmington, NC 28401

LS3P PROJECT: 7701-177600
WOODS PROJECT: 21-3351

Δ	DATE	DESCRIPTION
0	2023.05.22	PERMIT SET
2	2023.06.22	ADDENDUM #2

SHEET NAME: THIRD FLOOR FRAMING PLAN - AREA B

ORIG SUBMISSION: 2023.05.22

SHEET: S-203B

PERMIT SET

TRUE NORTH PROJECT NORTH

6/21/2023 12:05:10 PM

THE LINE SHOWN ABOVE IS EXACTLY ONE INCH LONG ON ORIGINAL PLOT SIZE

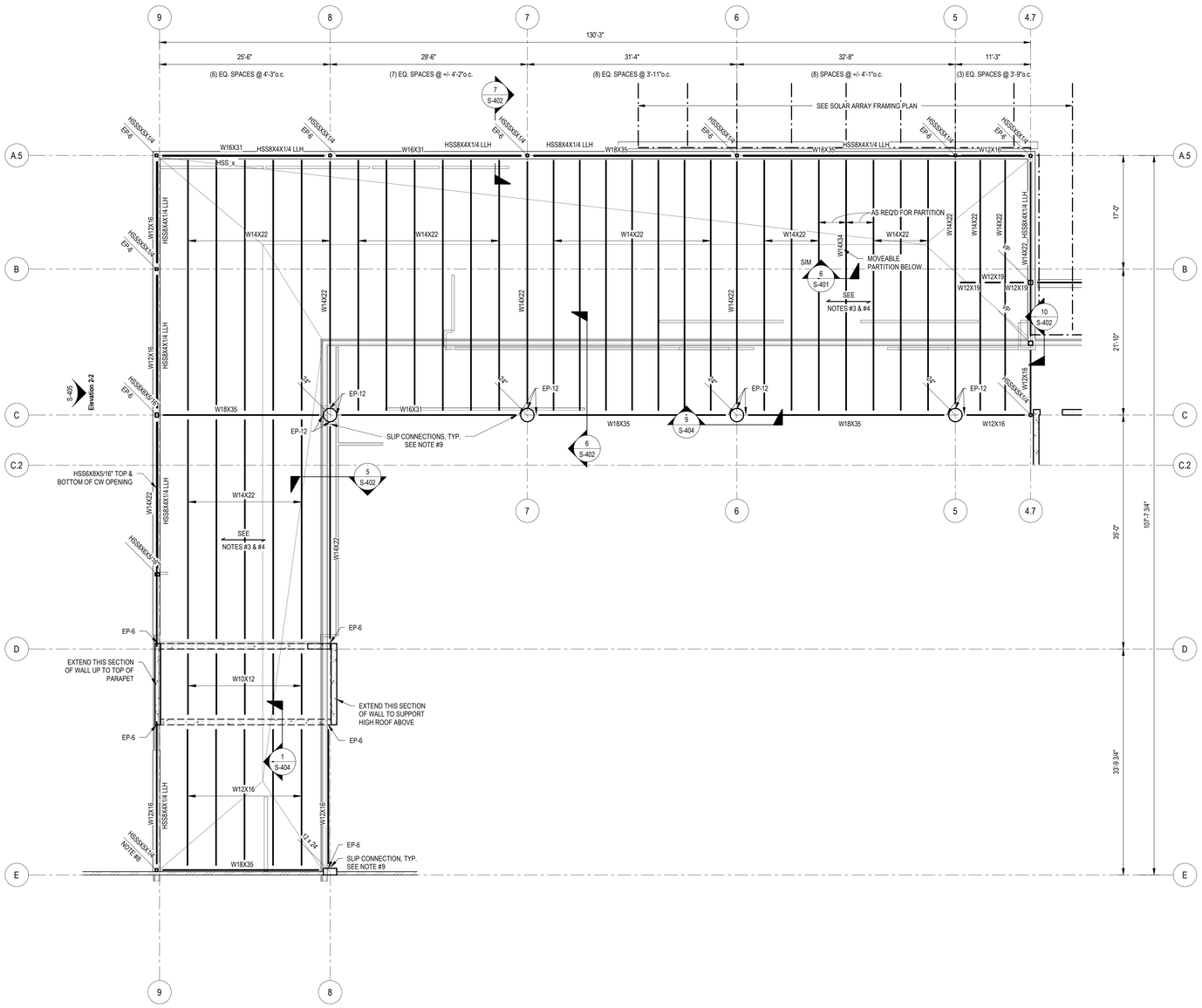

ROOF FRAMING LEGEND

- W8X4 / HSS4X4 — STEEL COLUMN - SEE PLAN FOR SIZE AND LOCATION
- W_x_ — STEEL BEAM - SEE PLAN FOR SIZE AND LOCATION
- INDICATES STEEL ROOF JOISTS SEE PLAN FOR SIZE AND SPACING
- BFB — GIRDER BOTTOM FLANGE BRACING SEE SECTION ON S-10 SHEETS
- 0 — GRID DESIGNATION FOR CENTERLINE OF COLUMN

NOTES - ROOF FRAMING

1. SEE S-10 SHEETS FOR ADDITIONAL GENERAL NOTES, MATERIAL NOTES AND MATERIAL SPECIFICATIONS. ALSO, SEE S-10 SHEETS FOR TYPICAL DETAILS. TYPICAL DETAILS ARE GENERALLY NOT SHOWN ON PLAN BUT RATHER ARE INTENDED TO DEFINE TYPICAL CONSTRUCTION CONDITIONS.
2. ELEVATIONS SHOWN ON PLAN ARE REFERENCED TO DATUM ELEVATION (0'-0") - SEE S-201.
3. TYPICAL ROOF DECK IS 11/2" DEEP, 20 ga., GALVANIZED, TYPE 'B' METAL ROOF DECK.
4. METAL ROOF DECK SHALL BE ATTACHED TO SUPPORTING MEMBERS WITH HILTI X-HSN 24 FOR STEEL THICKNESS EQUAL TO OR LESS THAN 3/8" AND HILTI X-ENP 19 OTHERWISE IN A 36/4 PATTERN U.N.O. ON PLAN - EXCEPT WITHIN 5'-0" OF ROOF EDGE PROVIDE FASTENERS IN A 36/7 PATTERN. PROVIDE (1) HILTI SCC TEK SIDELAP SCREW PER SPAN, U.N.O. ON PLAN.

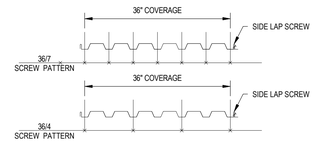

4. ALL JOISTS SHALL BE DESIGNED FOR A NET UPLIFT PRESSURE OF ?? psf.
5. PROVIDE JOIST BRIDGING PER SJI RECOMMENDATIONS.
6. SEE S-50 SHEETS FOR BRACE FRAME INFORMATION.
7. WHEN A SECTION IS CUT OR A DETAIL IS LABELED FOR A PARTICULAR CONDITION, THAT SECTION OR DETAIL SHALL APPLY FOR ALL SIMILAR CONDITIONS REGARDLESS OF WHETHER CUT OR LABELED, U.N.O.
8. EXTEND COLUMN TO TOP OF PARAPET, TYP.
9. PROVIDE SLIP CONNECTION AT ALL STEEL TO CONCRETE CONNECTIONS

LOW ROOF FRAMING PLAN

SCALE: 1/8" = 1'-0"

TOP OF STEEL = +50'-0" (Δ2)

NEW HANOVER COUNTY • NORTH CAROLINA • ESTABLISHED 1729

CFD Cape Fear Development

LS3P

101 NORTH THIRD STREET, SUITE 500
WILMINGTON, NORTH CAROLINA 28401
TEL. 910.790.3111 FAX. 910.790.9901
WWW.LS3P.COM

WOODS ENGINEERING Consulting Structural Engineers

254 North Front Street Phone: 910.343.8007
Suite 201 Fax: 910.343.8088
Wilmington, N.C. 28401 www.woodseng.com

WOODS ENGINEERING, P.A. CORPORATE SEAL No. C-1806 NORTH CAROLINA

NORTH CAROLINA PROFESSIONAL SEAL 19475 ENGINEER RON R. WOODS

COPYRIGHT 2023 ALL RIGHTS RESERVED. PRINTED OR ELECTRONIC DRAWINGS AND DOCUMENTATION MAY NOT BE REPRODUCED IN ANY FORM WITHOUT WRITTEN PERMISSION FROM LS3P ASSOCIATES LTD.

Project Grace

Grace Street
Wilmington, NC 28401

LS3P PROJECT: 7701-177600
WOODS PROJECT: 21-3351

Δ	DATE	DESCRIPTION
0	2023.05.22	PERMIT SET
2	2023.06.22	ADDENDUM #2

SHEET NAME:
LOW ROOF FRAMING PLAN

ORIG SUBMISSION: 2023.05.22

SHEET: S-205

PERMIT SET

TRUE NORTH PROJECT NORTH

6/21/2023 11:39:56 AM

THE LINE SHOWN ABOVE IS EXACTLY ONE INCH LONG ON ALL SHEETS ORIGINAL PAGE SIZE

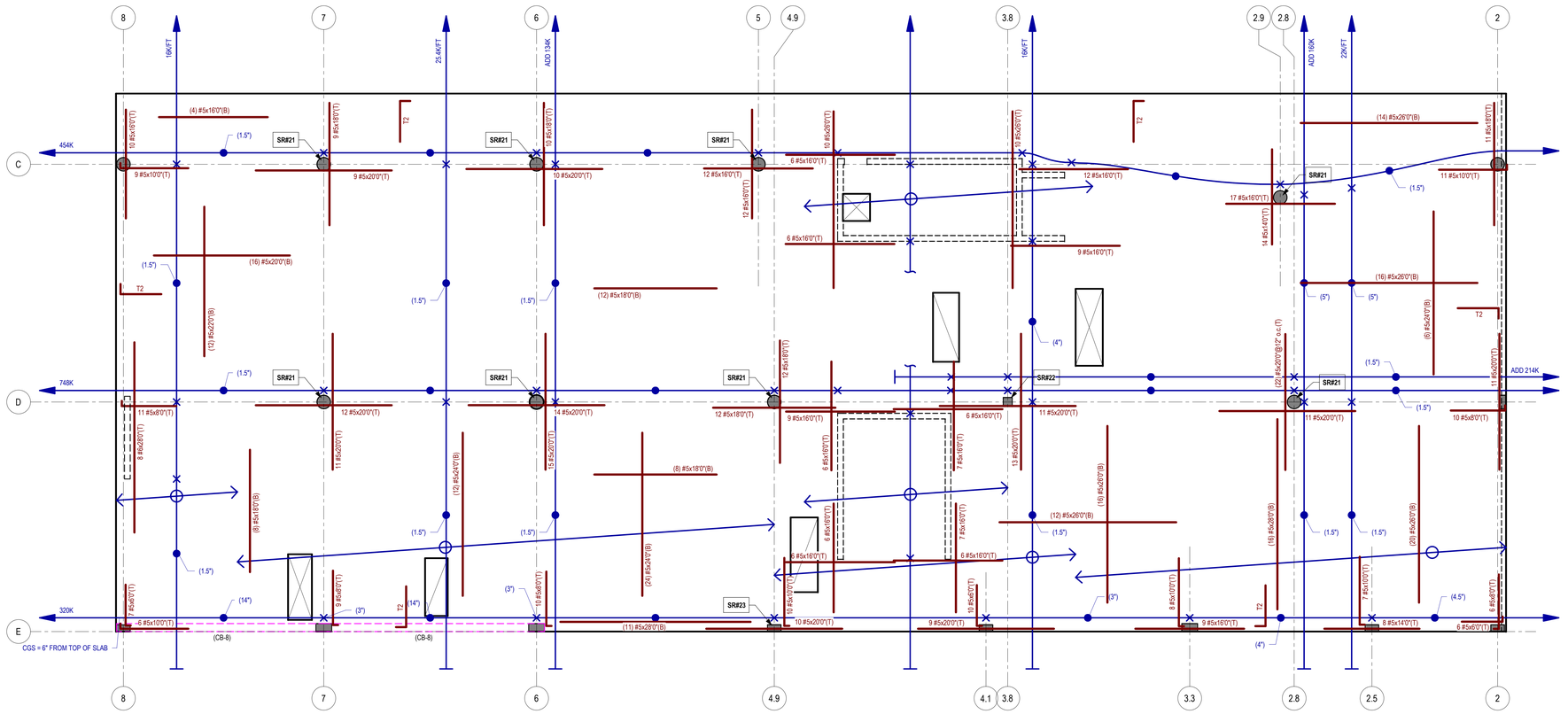

ROOF PT SLAB PLAN

SCALE: 1/8" = 1'-0"

NOTES - POST TENSION SLAB PLAN

1. SEE SHEET S-10 SHEETS FOR ADDITIONAL GENERAL NOTES, FOUNDATION NOTES, CONCRETE NOTES, AND REINFORCING STEEL NOTES AND TYPICAL DETAILS. TYPICAL DETAILS ARE GENERALLY NOT SHOWN ON PLAN BUT RATHER ARE INTENDED TO DEFINE TYPICAL CONSTRUCTION CONDITIONS.
2. TOP OF TYPICAL SLAB ELEVATION VARIES - SEE SHEET S-206
3. STRUCTURAL FLOOR SYSTEM IS A TWO-WAY CONCRETE FLAT PLATE (BANDED AND UNIFORM TENDON LAYOUT), TYPICAL U.N.O. SEE FRAMING PLAN FOR SLAB THICKNESS. SEE SHEET S-7 SHEET SERIES FOR TYPICAL POST-TENSIONING DETAILS. ANY REINFORCEMENT SHOWN ON TYP. DETAILS IS IN ADDITION TO THE REINF. SHOWN ON REBAR PLANS.
4. REFER TO ARCHITECTURAL, MECHANICAL, ELECTRICAL, PLUMBING, AND OTHER DISCIPLINE DRAWINGS FOR OPENINGS AND DEPRESSIONS NOT SHOWN ON THESE DRAWINGS. *SEE S-7 FOR ALLOWABLE SLEEVE LOCATIONS.*
5. ALL POST INSTALLED ANCHORAGE TO HAVE A MAXIMUM EMBED OF 3/4" TO ENSURE TENDONS ARE NOT DAMAGED DURING INSTALLATION.
6. SR# INDICATES STUD RAIL TYPE, SEE S-6 SHEETS FOR DETAILS.

NOTES - FLOOR PLAN

MILD REINFORCING NOTES:

a. ALL BOTTOM REINFORCING BARS ARE CENTERED WITHIN THE SLAB SPAN, UNO. DISTRIBUTE BOTTOM BARS UNIFORMLY THROUGHOUT THE EXTENT SHOWN ON PLAN. WHERE NO EXTENT IS SHOWN, BOTTOM BARS ARE TO BE PLACED BETWEEN THE COLUMN LINES.

b. ALL TOP REINFORCING BARS ARE CENTERED OVER THE COLUMNS, UNO. A MINIMUM OF (4)#6 SHALL BE PLACED OVER EACH COLUMN IN EACH ORTHOGONAL DIRECTION, UNO ON PLAN. SEE S-7 SHEETS FOR TYPICAL TOP REBAR PLACEMENT DETAILS.

c. ALL REBAR SPLICING SHALL BE FULL TENSION LAP SPLICE "B". ALL REBAR ENDS @ SLAB EDGE TO BE PROVIDED W/ STANDARD HOOKS.

d. TOP & BOTTOM REBAR SHOWN ON PLAN ARE IN ADDITION TO THE REINFORCING SHOWN ON TYPICAL DETAILS.

e. REBAR COVER FOR THIS FLOOR SLAB:
BOTTOM BARS = 0.75" U.N.O.
TOP BARS = 0.75" U.N.O.
PT = 0.75" U.N.O.

f. = (2) #5 TOP AND BOTTOM TYP. WHERE INDICATED ON PLAN

POST-TENSION REINFORCING NOTES:

a. ALL CABLES, ANCHORAGES AND COUPLERS SHALL BE ENCAPSULATED - SEE SPECIFICATIONS.

b. IF ELEVATIONS OF BANDED & UNIFORM TENDONS CONFLICT, THEN PLACE UNIFORM TENDONS BELOW BANDED.

c. MINIMUM (2) PT CABLES TO PASS DIRECTLY OVER EACH COLUMN IN EA. ORTHOGONAL DIRECTION.

d. HIGH CGS POINTS OF TENDON PROFILES ARE AT CENTERLINE OF SUPPORTS. LOW CGS POINTS ARE AT MID-SPAN UNLESS SPECIFICALLY NOTED OTHERWISE ON PLAN.

e. FOR SINGLE END STRESSING OF BANDED & UNIFORM TENDONS - ALTER STRESSING ENDS WHERE POSSIBLE.

f. ANCHORS AT SLAB EDGE ARE PLACED AT MID-DEPTH OF SLAB ROUNDED UP TO THE CLOSES 1/4" UNLESS NOTED OTHERWISE ON PLAN.

TENDON PROFILE SYMBOL LEGEND:

- (X") LOW POINT = 1" ABOVE BOTTOM OF SLAB / BOTTOM OF BEAM, U.N.O. X = DISTANCE ABOVE BOTTOM OF SLAB / BEAM
- (X") HIGH POINT = 1" BELOW TOP OF SLAB / TOP OF BEAM, U.N.O. X = DISTANCE BELOW TOP OF SLAB / BEAM
- DEAD END = AT CENTROID OF SLAB, U.N.O.
- STRESSING END = AT CENTROID OF SLAB, U.N.O.
- CONTINUATION OF TENDON NOT SHOWN - MATCH ADJACENT TENDONS FORCE AND PROFILE

LEGEND - FLOOR PLAN

- INDICATES CONC. SHEAR WALL. SEE S-9D SHEETS FOR REINFORCING DETAILS
- SEE INDICATES CONCRETE COLUMN, SEE SCHEDULE ON S6.0 SHEETS
- SEE INDICATES CONCRETE COLUMN BELOW
- 0 GRID DESIGNATION FOR CENTERLINE OF COLUMN
- CB WxD INDICATES CONCRETE BEAM WIDTH x DEPTH, SEE S6 SHEETS FOR REQUIREMENTS
- INDICATES REINFORCEMENT - (T) INDICATES TOP BARS (B) INDICATES BOTT. BARS
- INDICATES STANDARD 90deg. HOOK
- T2 INDICATES #5x10" LONG WITH 90deg HOOK @ 12"o.c., TYP. ALL SLAB EDGES BETWEEN TOP COLUMN BARS

101 NORTH THIRD STREET, SUITE 500
WILMINGTON, NORTH CAROLINA 28401
TEL. 910.790.3111 FAX. 910.790.9901
WWW.LS3P.COM

WOODS ENGINEERING
Consulting Structural Engineers
254 North Front Street Phone: 910.343.8007
Suite 201 Fax: 910.343.8088
Wilmington, N.C. 28401 www.woodseng.com

COPYRIGHT 2023 ALL RIGHTS RESERVED. PRINTED OR ELECTRONIC DRAWINGS AND DOCUMENTATION MAY NOT BE REPRODUCED IN ANY FORM WITHOUT WRITTEN PERMISSION FROM LS3P ASSOCIATES LTD.

Project Grace

Grace Street
Wilmington, NC 28401

LS3P PROJECT: 7701-177600
WOODS PROJECT: 21-3351

Δ	DATE	DESCRIPTION
0	2023.05.22	PERMIT SET
2	2023.06.22	ADDENDUM #2

SHEET NAME:
ROOF PT SLAB PLAN

ORIG SUBMISSION: 2023.05.22

SHEET:
S-206 PT

PERMIT SET

TRUE NORTH PROJECT NORTH

6/21/2023 11:40:11 AM

THE LINE SHOWN ABOVE IS EXACTLY ONE INCH LONG ON ALL SHEETS EXCEPT ONE. PLEASE SEE.

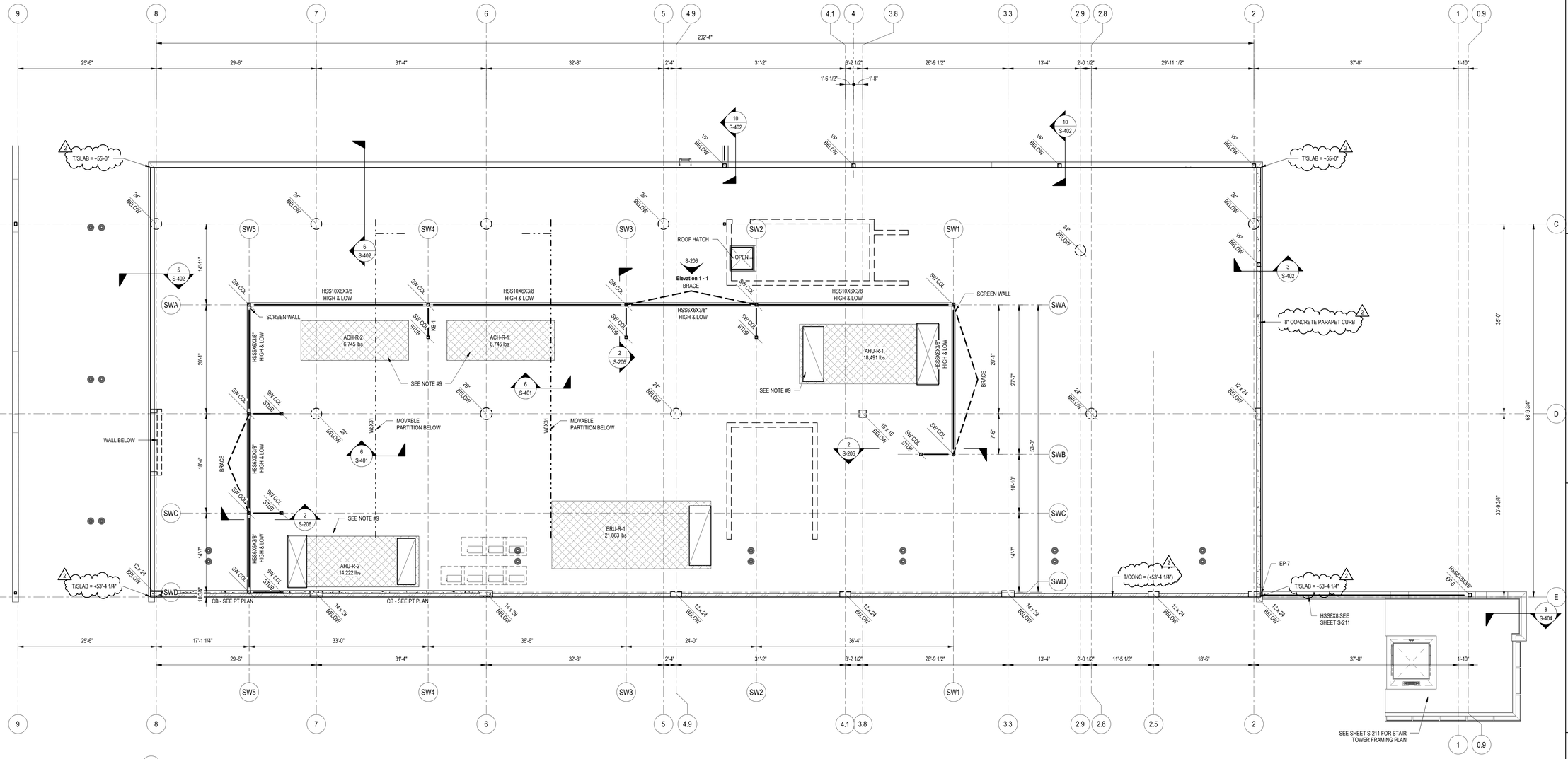

HIGH ROOF FRAMING PLAN

SCALE: 1/8" = 1'-0"

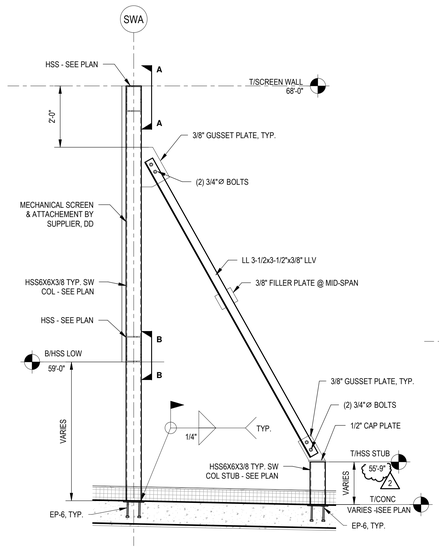

SECTION 2-2 SW KICKER

SCALE: 1/2" = 1'-0"

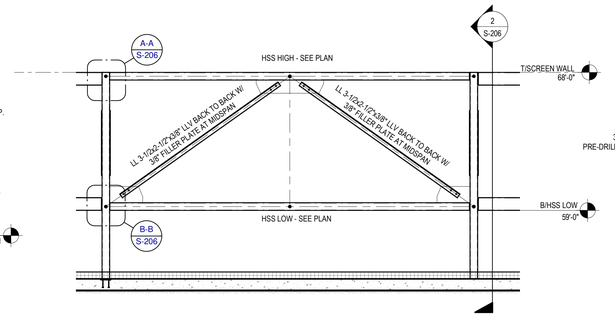

Elevation 1 - 1

SCALE: 1/4" = 1'-0"

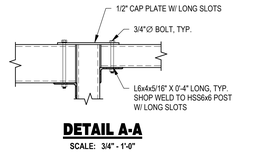

DETAIL A-A

SCALE: 3/4" - 1'-0"

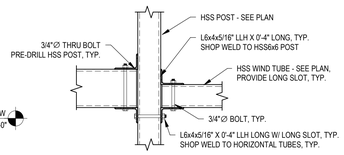

DETAIL B-B

SCALE: 3/4" - 1'-0"

CONCRETE ROOF FRAMING LEGEND

- KB-1 — INDICATES LL3-1/2"x3 1/2" x 1/4" LLV KICKER BRACE
- SW COL — INDICATES HSS6X6X3/8 SCREEN WALL POST
- INDICATES CONCRETE WALLS BELOW
- SIZE — INDICATES CONCRETE COLUMN BELOW - SEE SCHEDULE ON S-60 SHEETS
- 0 — GRID DESIGNATION FOR CENTERLINE OF COLUMN
- (E) 0 — EXISTING PARKING DECK GRID LINE
- CBx — CONCRETE BEAM - SEE PT PLANS & S-60 SHEETS
- INDICATES SOUND MAT LOCATION - SEE NOTE #9
- INDICATES WF PARTITION BEAM - SEE PLAN FOR SIZE & LOCATION

CONCRETE ROOF FRAMING NOTES

1. SEE S-10 SHEETS FOR ADDITIONAL GENERAL NOTES, FOUNDATION NOTES, CONCRETE NOTES AND REINFORCING STEEL NOTES AND TYPICAL DETAILS. TYPICAL DETAILS ARE GENERALLY NOT SHOWN ON PLAN BUT RATHER ARE INTENDED TO DEFINE TYPICAL CONSTRUCTION CONDITIONS.
2. TOP OF SLAB ELEVATION VARIES. SEE PLAN. ELEVATIONS ARE REFERENCED TO DATUM ELEVATION, SEE S200A
3. STRUCTURAL FLOOR SYSTEM IS A 9" THICK TWO-WAY CONCRETE FLAT PLATE (BANDED AND UNIFORM TENDON LAYOUT), TYPICAL U.N.O. SEE S7.0 SHEETS FOR TYPICAL POST-TENSIONING DETAILS. ANY REINFORCEMENT SHOWN ON TYP. DETAILS IS IN ADDITION TO THE REINF. SHOWN ON REBAR PLANS.
4. CONCRETE STRENGTH
   FLOOR
   f'c = REQUIRED MINIMUM CONCRETE STRENGTH AT TIME OF STRESSING = 3750psi
   f'c = 28 DAY CONCRETE STRENGTH = 5000psi
   COLUMNS & SHEARWALLS
   f'c = 28 DAY CONCRETE STRENGTH = 5000psi.
5. REFER TO ARCHITECTURAL, MECHANICAL, ELECTRICAL, PLUMBING, AND OTHER DISCIPLINE DRAWINGS FOR OPENINGS AND DEPRESSIONS NOT SHOWN ON THESE DRAWINGS. *PLUMBING SLEEVES ARE **NOT** ALLOWED WITHIN 5'-0" OF COLUMNS.*
6. ALL POST INSTALLED ANCHORAGE TO HAVE A MAXIMUM EMBED OF 1" TO ENSURE TENDONS ARE NOT DAMAGED DURING INSTALLATION.
7. SR# INDICATES STUD RAIL TYPE, SEE S7.0 SHEETS FOR DETAILS.
8. DELAY POUR STIP TO BE LEFT OPENED FOR MIN 30 DAYS. AFTER ADJACANT SLABS ARE STRESSED
9. CANTILEVERED SLAB EACH SIDE OF POUR STRIP DO NOT NEED TO BE SHORED AFTER STRESSING - JUST RESHORED SIMILER TO TYPICAL SLAB AREAS. INFILL CONCRETE FOR DELAY STRIPS TO BE 5,000psi NORMAL WEIGHT WITH SHRINKAGE COMPENSAING ADMIXTURE.

PROVIDE 2" SOUND MAT & 4" CONCRETE TOPPING SLAB W/ WWF6X6XW2.9XW2.9 TYP. UNDER AHU, ACH & ERU UNITS. EXTEND SOUND MAT AND TOPPING SLAB 12" PAST UNIT CURBS, TYPICAL ALL (4) SIDES.

TRUE NORTH PROJECT NORTH

6/21/2023 11:40:04 AM

NEW HANOVER COUNTY • NORTH CAROLINA • ESTABLISHED 1729

CFD Cape Fear Development

LS3P

101 NORTH THIRD STREET, SUITE 500
WILMINGTON, NORTH CAROLINA 28401
TEL. 910.790.3111 FAX. 910.790.9901
WWW.LS3P.COM

WOODS ENGINEERING Consulting Structural Engineers

254 North Front Street Phone: 910.343.8007
Suite 201 Fax: 910.343.8088
Wilmington, N.C. 28401 www.woodseng.com

WOODS ENGINEERING, P.A. CORPORATE SEAL No. C-1806 NORTH CAROLINA

NORTH CAROLINA PROFESSIONAL ENGINEER SEAL 19475 RON R. WOODS

COPYRIGHT 2023 ALL RIGHTS RESERVED. PRINTED OR ELECTRONIC DRAWINGS AND DOCUMENTATION MAY NOT BE REPRODUCED IN ANY FORM WITHOUT WRITTEN PERMISSION FROM LS3P ASSOCIATES LTD.

Project Grace

Grace Street
Wilmington, NC 28401

LS3P PROJECT: 7701-177600
WOODS PROJECT: 21-3351

Δ	DATE	DESCRIPTION
0	2023.05.22	PERMIT SET
2	2023.06.22	ADDENDUM #2

SHEET NAME: HIGH ROOF FRAMING PLAN

ORIG SUBMISSION: 2023.05.22

SHEET: S-206

PERMIT SET

THE LINE SHOWN ABOVE IS EXACTLY ONE INCH LONG ON ORIGINAL PLOT SHEETS

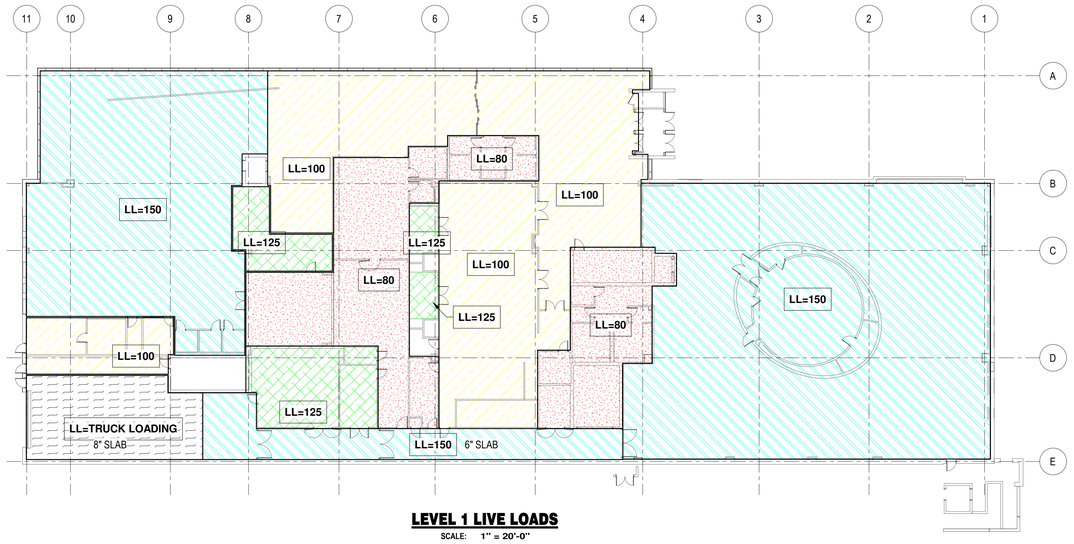

LEVEL 1 LIVE LOADS

SCALE: 1" = 20'-0"
LL = DESIGN LIVE LOAD

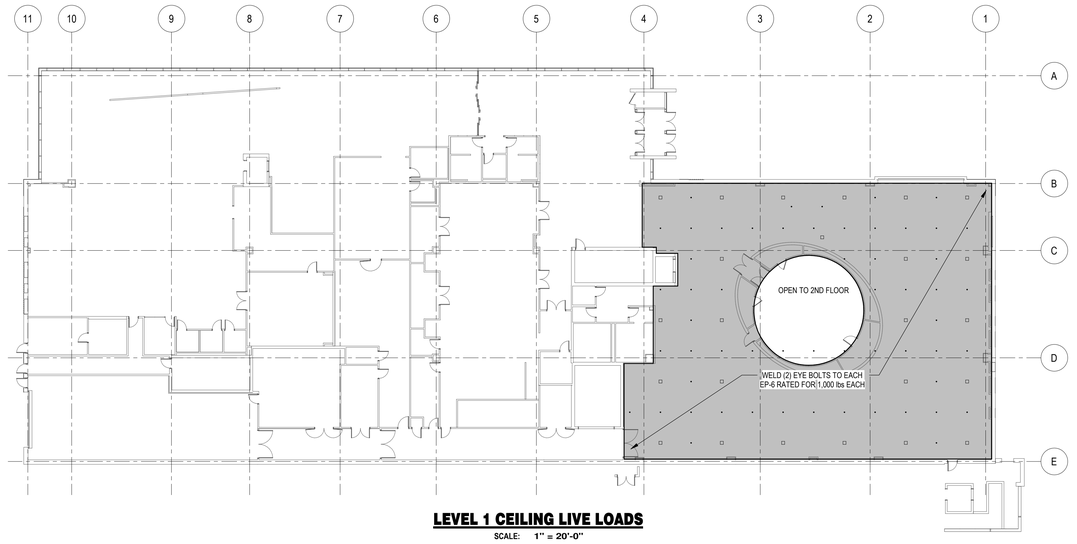

LEVEL 1 CEILING LIVE LOADS

SCALE: 1" = 20'-0"

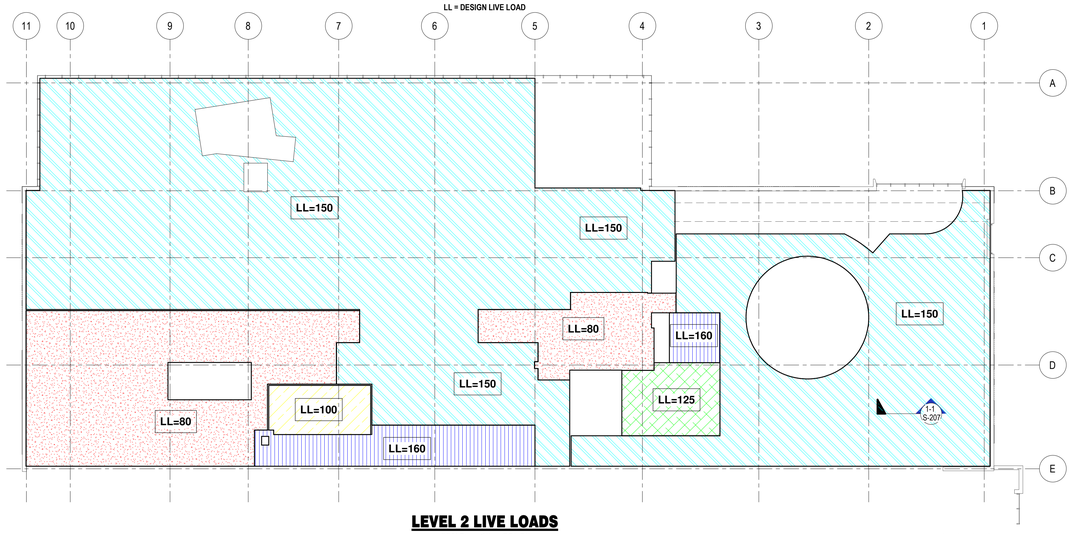

LEVEL 2 LIVE LOADS

SCALE: 1" = 20'-0"
LL = DESIGN LIVE LOAD

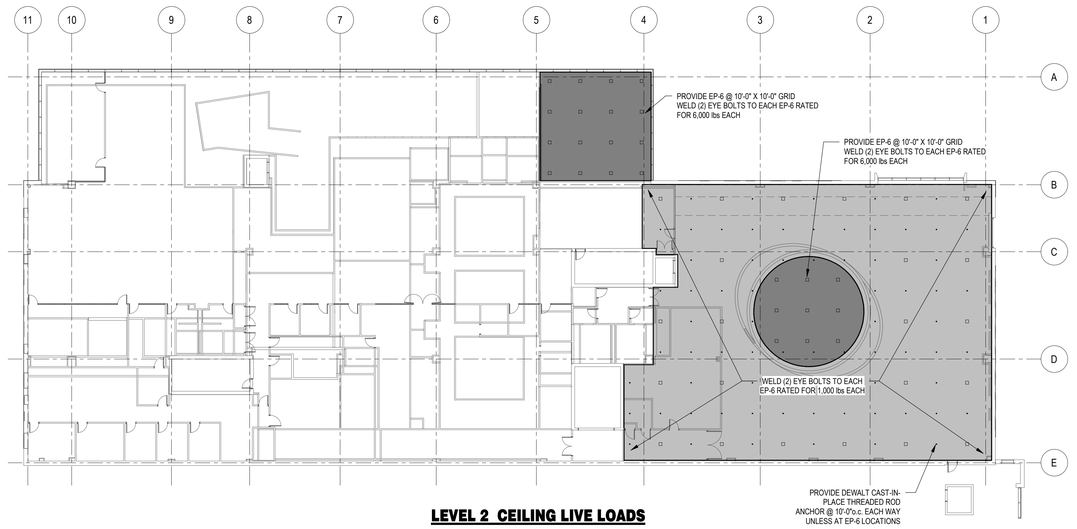

LEVEL 2 CEILING LIVE LOADS

SCALE: 1" = 20'-0"

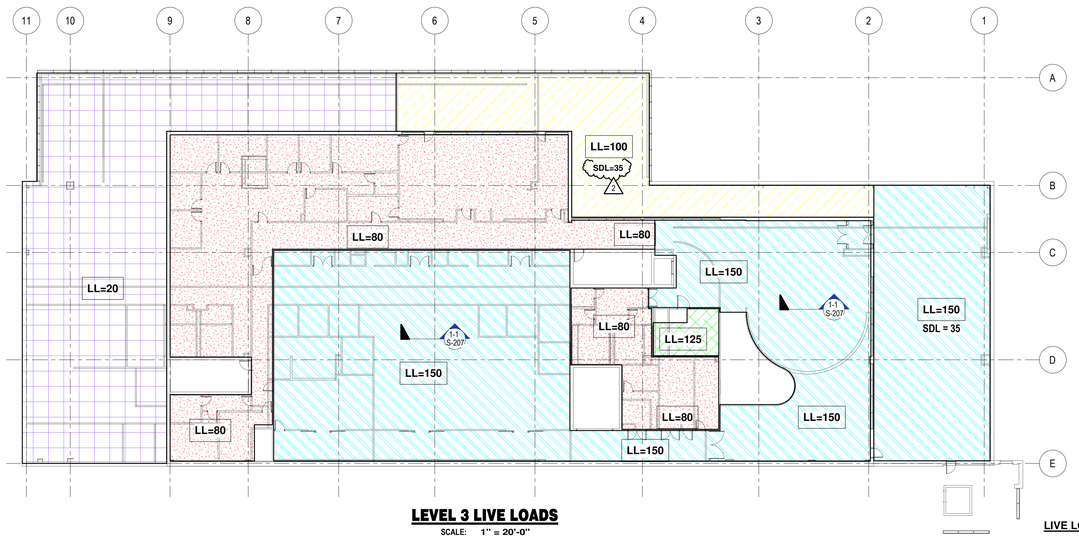

LEVEL 3 LIVE LOADS

SCALE: 1" = 20'-0"
LL = DESIGN LIVE LOAD

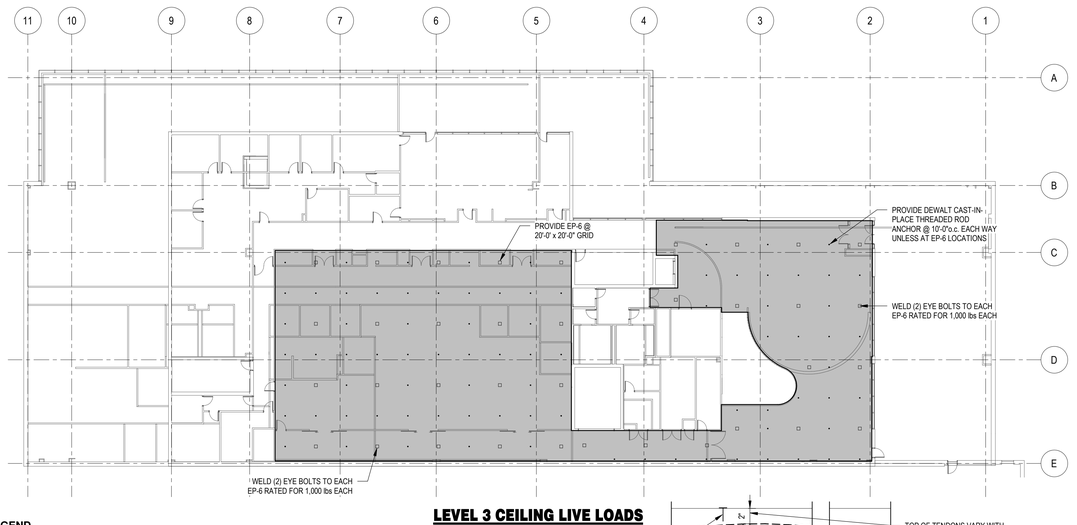

LEVEL 3 CEILING LIVE LOADS

SCALE: 1" = 20'-0"

LIVE LOADING LEGEND

ROOF	OFFICE	ASSEMBLY	STORAGE	LIBRARY STACK OR MUSEUM EXHIBIT AREAS		
LL= 20	LL= 80	LL= 100	LL= 125	LL= 150	LL= 160	LL= TRUCK LOADING

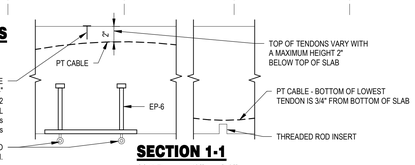

MESUEM EXHIBIT ANCHORS SHALL HAVE MAXIMUM EMBEDMENT OF 1 3/4" 1/4"-Ø X 1 3/4" SIMPSON TITEN 2 CONCRETE SCREWS OR EQUAL ALLOWABLE TENSION = 1,500lbs ALLOWABLE SHEAR = 400lbs

FIELD WELD (2) EYEBOLT RIGGING SUPPORTS TO EACH EP-6, MINIMUM CAPACTIY = 6,000 lbs EACH.

SECTION 1-1

SCALE: 1 1/2" = 1'-0"

6/21/2023 11:40:27 AM

101 NORTH THIRD STREET, SUITE 500
WILMINGTON, NORTH CAROLINA 28401
TEL. 910.790.3111 FAX. 910.790.9901
WWW.LS3P.COM

WOODS ENGINEERING
Consulting Structural Engineers
254 North Front Street Phone: 910.343.8007
Suite 201 Fax: 910.343.8088
Wilmington, N.C. 28401 www.woodseng.com

WOODS ENGINEERING, P.A. CORPORATE SEAL No. C-1806 NORTH CAROLINA

NORTH CAROLINA PROFESSIONAL SEAL 19475 ENGINEER RON R. WOODS

COPYRIGHT 2023 ALL RIGHTS RESERVED. PRINTED OR ELECTRONIC DRAWINGS AND DOCUMENTATION MAY NOT BE REPRODUCED IN ANY FORM WITHOUT WRITTEN PERMISSION FROM LS3P ASSOCIATES LTD.

Project Grace

Grace Street
Wilmington, NC 28401

LS3P PROJECT: 7701-177600
WOODS PROJECT: 21-3351

Δ	DATE	DESCRIPTION
0	2023.05.22	PERMIT SET
2	2023.06.22	ADDENDUM #2

SHEET NAME:
DESIGN LIVE LOAD PLANS AND EXHIBIT ANCHORAGE DETAILS

ORIG SUBMISSION: 2023.05.22

SHEET: S-207

PERMIT SET

THE LINE SHOWN ABOVE IS EXACTLY ONE INCH LONG ON ALL SHEETS ORIGINAL PAGE SIZE

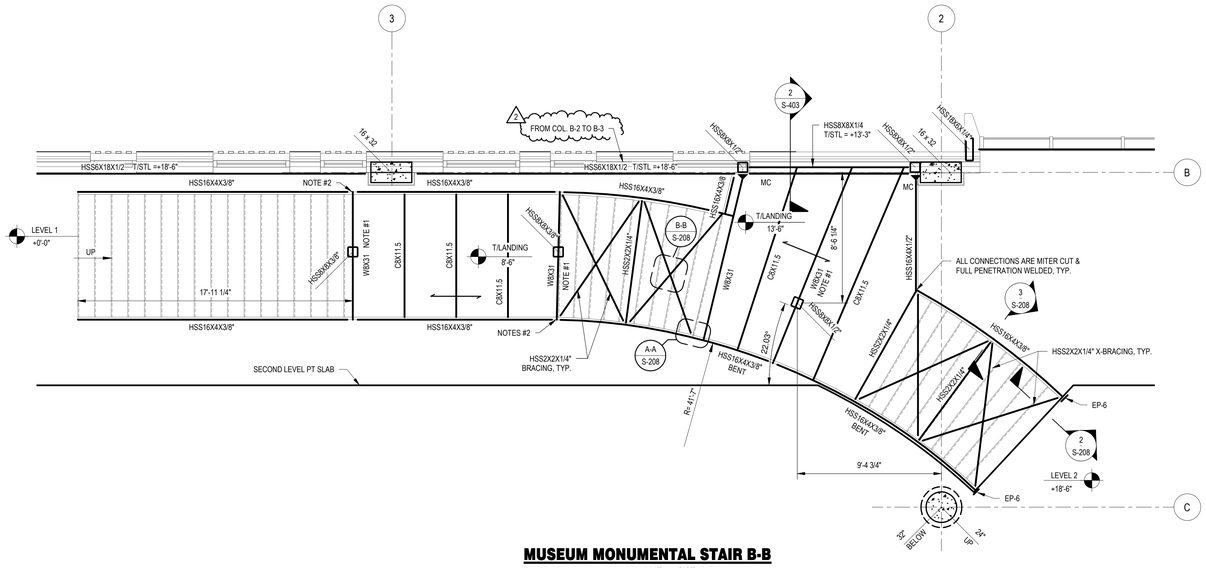

MUSEUM MONUMENTAL STAIR B-B

SCALE: 1/4" = 1'-0"

NOTE:

1. W8 SHALL BE CONTINUOUS OVER TOP OF HSS COLUMNS AND MOMENT CONNECTED TO HSS W/ (2) 1/4" WEB STIFFENERS EACH SIDE OF W8
2. W8's SUPPORT STRINGERS TYP.

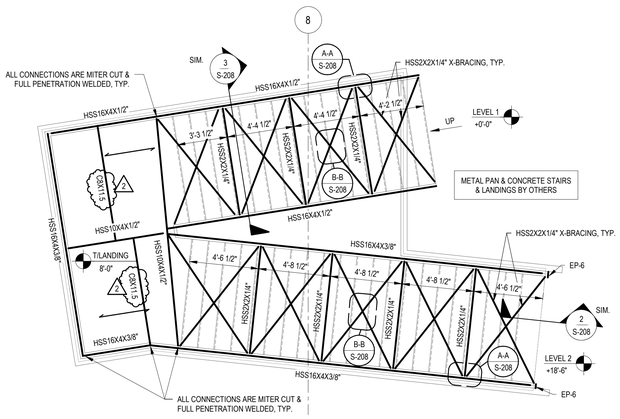

LIBRARY MONUMENTAL STAIR A-A FRAMING PLAN

SCALE: 1/4" = 1'-0"

MONUMENTAL STAIR PLAN LEGEND

- INDICATES SPAN DIRECTION FOR 10 ga. BENT PLATE LANDING CHANNELS WITH 3,000 psi CONCRETE. TOTAL SLAB AND CHANNEL THICKENESS = 3", FINAL DESIGN BY STAIR SUPPLIER
- 0 — GRID DESIGNATION FOR CENTERLINE OF COLUMN U.N.O.
- SIZE — INDICATES CONCRETE COLUMN - SEE SCHEDULE ON S-60 SHEETS
- SIZE BP-x — HSS STEEL COLUMN - SEE PLAN FOR SIZE AND LOCATION SEE S3.0 SHEETS FOR BASE PLATE DETAILS (BP-x)

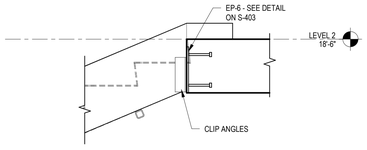

SECTION 2

SCALE: 3/4" = 1'-0"

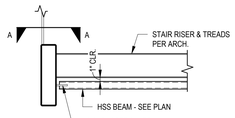

SECTION 3

SCALE: 3/4" = 1'-0"

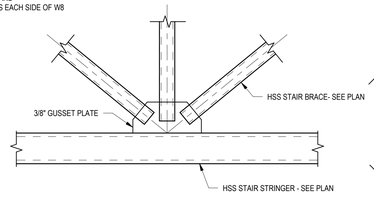

DETAIL A-A

SCALE: 1 1/2" = 1'-0"

TYPICAL STAIR BRACE TO STRINGER DETAIL

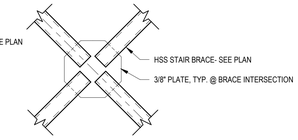

DETAIL B-B

SCALE: 1 1/2" = 1'-0"

TYPICAL STAIR BRACE INTERSECTION DETAIL

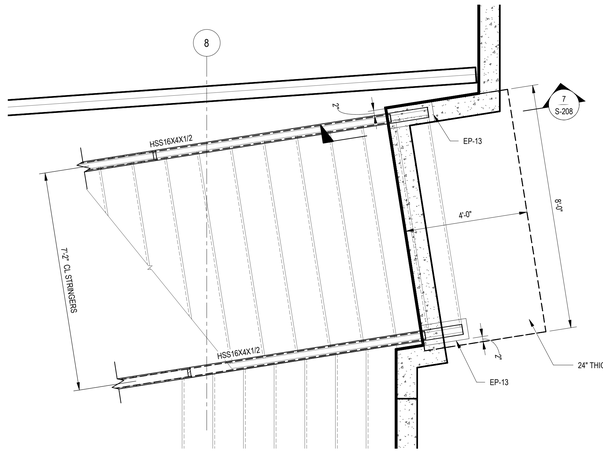

LIBRARY MONUMENTAL STAIR A-A FOUNDATION PLAN

SCALE: 1/2" = 1'-0"

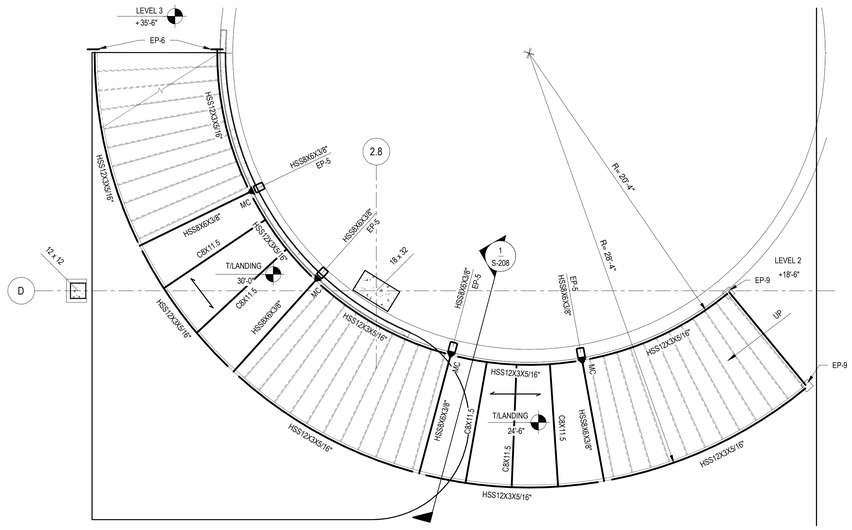

MUSEUM MONUMENTAL STAIR C-C

SCALE: 1/4" = 1'-0"

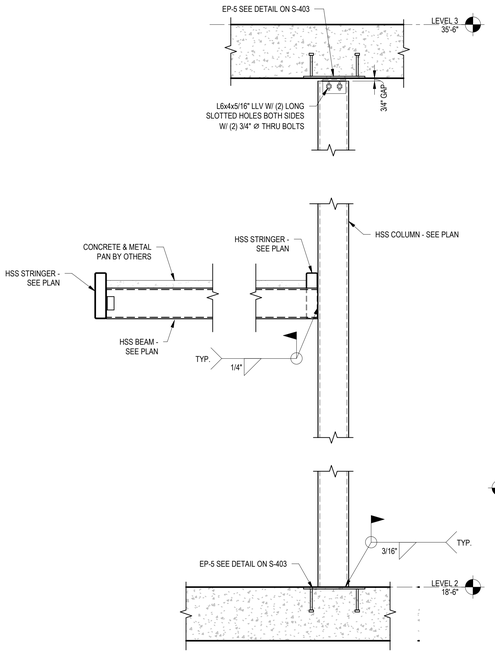

SECTION 1

SCALE: 3/4" = 1'-0"

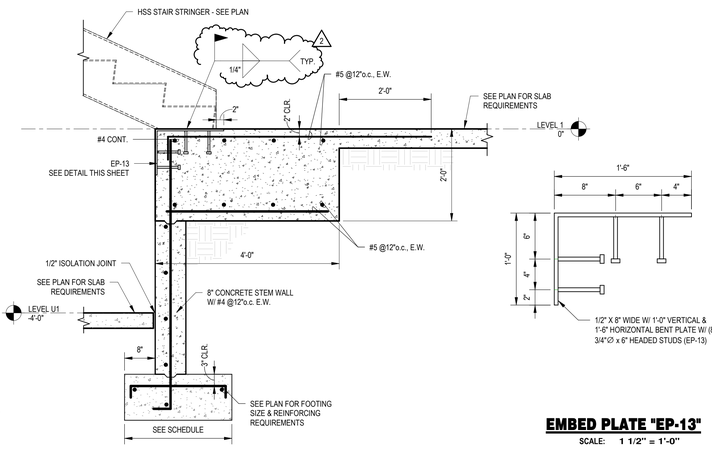

SECTION 7

SCALE: 3/4" = 1'-0"

EMBED PLATE "EP-13"

SCALE: 1 1/2" = 1'-0"

TRUE NORTH PROJECT NORTH

101 NORTH THIRD STREET, SUITE 500
WILMINGTON, NORTH CAROLINA 28401
TEL. 910.790.3111 FAX. 910.790.9901
WWW.LS3P.COM

WOODS ENGINEERING
Consulting Structural Engineers
254 North Front Street Phone: 910.343.8007
Suite 201 Fax: 910.343.8088
Wilmington, N.C. 28401 www.woodseng.com

WOODS ENGINEERING, P.A. CORPORATE SEAL No. C-1806 NORTH CAROLINA

NORTH CAROLINA PROFESSIONAL ENGINEER SEAL 19475 RON R. WOODS

COPYRIGHT 2023 ALL RIGHTS RESERVED. PRINTED OR ELECTRONIC DRAWINGS AND DOCUMENTATION MAY NOT BE REPRODUCED IN ANY FORM WITHOUT WRITTEN PERMISSION FROM LS3P ASSOCIATES LTD.

Project Grace

Grace Street
Wilmington, NC 28401

LS3P PROJECT: 7701-177600
WOODS PROJECT: 21-3351

Δ	DATE	DESCRIPTION
0	2023.05.22	PERMIT SET
2	2023.06.22	ADDENDUM #2

SHEET NAME:
MONUMENTAL STAIR PLANS, SECTIONS & DETAILS

ORIG SUBMISSION: 2023.05.22

SHEET: S-208

PERMIT SET

6/21/2023 11:40:39 AM

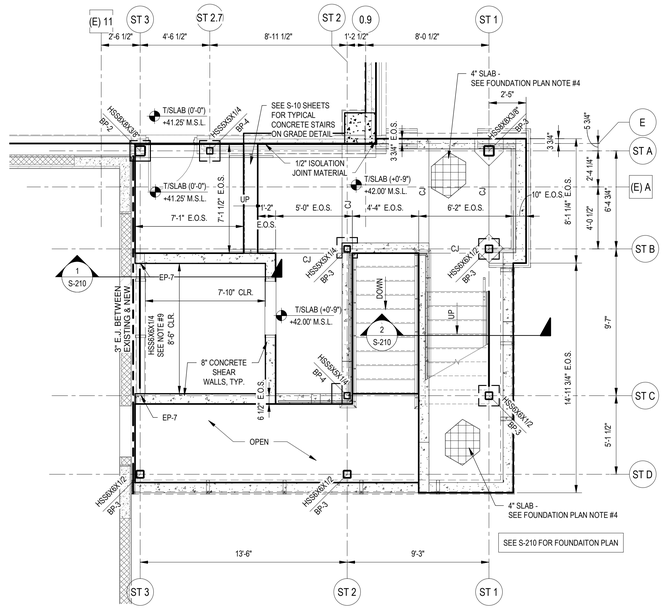

STAIR TOWER LEVEL 1 EOS PLAN

SCALE: 1/4" = 1'-0"

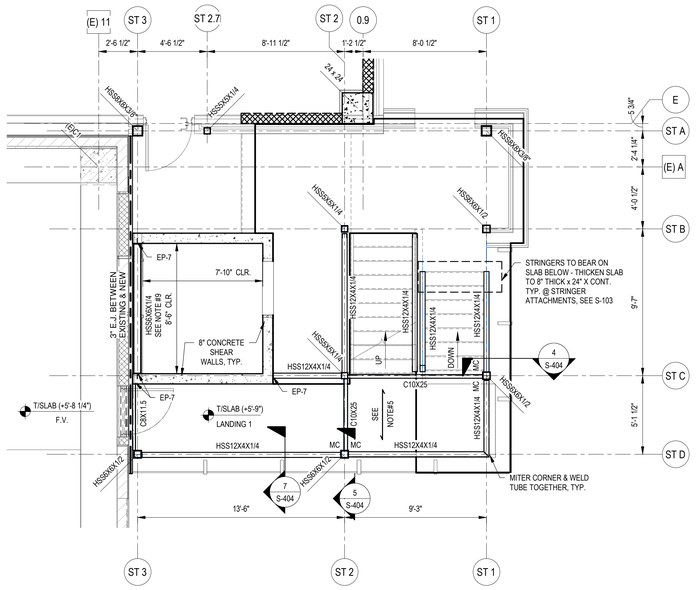

STAIR TOWER LANDING 1 FRAMING PLAN

SCALE: 1/4" = 1'-0"

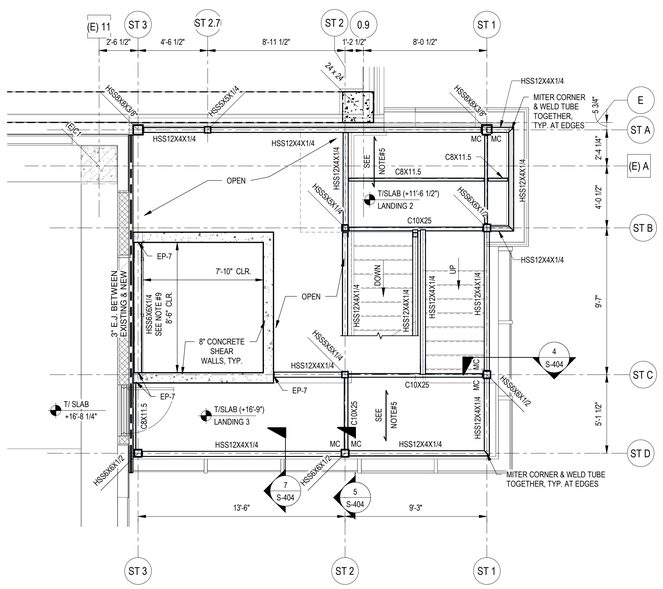

STAIR TOWER LANDING 2&3 FRAMING PLAN

SCALE: 1/4" = 1'-0"

STAIR TOWER LANDING 4&5 FRAMING PLAN

SCALE: 1/4" = 1'-0"

STAIR TOWER 6&7 LANDING FRAMING PLAN

SCALE: 1/4" = 1'-0"

STAIR TOWER ROOF FRAMING PLAN

SCALE: 1/4" = 1'-0"

T/STL = +47'-6" U.N.O.

PLAN LEGEND

- S.F. — INDICATES STEP FOOTING - SEE S-10 SHEETS FOR TYPICAL DETAILS
- CJ — INDICATES CONCRETE SLAB CONTRACTION JOINTS. SEE S-10 SHEETS FOR TYPICAL DETAILS. SEE PLAN FOR LOCATIONS. MAXIMUM SPACING = 12' IN EACH DIRECTION
- SIZE — INDICATES CONCRETE COLUMN SEE SHEETS
- BP-# — HSS STEEL COLUMN - SEE PLAN FOR SIZE AND LOCATION SEE S3.0 SHEETS FOR BASE PLATE DETAILS (BP-x)
- EP-x — EMBED PLATE SEE S-403
- 0 — GRID DESIGNATION FOR CENTERLINE OF COLUMN U.N.O.
- (E) 0 — EXISTING PARKING DECK GRID LINE
- W_x_ — STEEL BEAM - SEE PLAN FOR SIZE AND LOCATION
- MC — INDICATES MOMENT CONNECTION
- E.J. — BUILDING EXPANSION JOINT LOCATION = SEE S-10 SHEETS FOR TYPICAL DETAILS
- PG = X'-X" — INDICATES PROPOSED FINISHED GRADE ELEVATION (MSL) COORDINATE WITH CIVIL & ARCH PLANS

FLOOR & ROOF FRAMING NOTES

1. SEE S-10 SHEETS FOR ADDITIONAL GENERAL NOTES, MATERIAL NOTES AND MATERIAL SPECIFICATIONS. ALSO, SEE S-10 SHEETS FOR TYPICAL DETAILS. TYPICAL DETAILS ARE GENERALLY NOT SHOWN ON PLAN BUT RATHER ARE INTENDED TO DEFINE TYPICAL CONSTRUCTION CONDITIONS.
2. ELEVATIONS SHOWN ON PLAN ARE REFERENCED TO DATUM ELEVATION (0'-0") - SEE S-201.
3. TYPICAL ROOF DECK IS 1-1/2" DEEP, 20 ga., GALVANIZED, TYPE 'B' METAL ROOF DECK.
4. METAL ROOF DECK SHALL BE ATTACHED TO SUPPORTING MEMBERS WITH HILTI X-HSN 24 FOR STEEL THICKNESS EQUAL TO OR LESS THAN 3/8" AND HILTI X-ENP 19 OTHERWISE IN A 36/4 PATTERN U.N.O. ON PLAN - EXCEPT WITHIN 5'-0" OF ROOF EDGE PROVIDE FASTENERS IN A 36/7 PATTERN. PROVIDE (1) HILTI SCC TEK SIDELAP SCREW PER SPAN, U.N.O. ON PLAN.

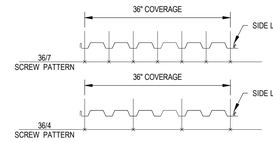

5. 10 ga. BENT PLATE LANDING CHANNELS WITH 3,000 psi CONCRETE. TOTAL SLAB AND CHANNEL THICKENESS = 3" FINAL DESIGN BY STAIR SUPPLIER
6. SEE S-50 SHEETS FOR SHEAR WALL INFORMATION.
7. WHEN A SECTION IS CUT OR A DETAIL IS LABELED FOR A PARTICULAR CONDITION, THAT SECTION OR DETAIL SHALL APPLY FOR ALL SIMILAR CONDITIONS REGARDLESS OF WHETHER CUT OR LABELED, U.N.O.
8. EXTEND COLUMN TO TOP OF PARAPET, TYP.
9. HSS6X6X1/4 BOTTOM OF STEEL AT BOTTOM OF EXISTING PARKING DECK SPANDREL, TYPICAL.

TRUE NORTH PROJECT NORTH

THE LINE SHOWN ABOVE IS EXACTLY ONE INCH LONG ON ARCH D SHEETS ORIGINAL PAPER SIZE

6/21/2023 11:41:06 AM

NEW HANOVER COUNTY, NORTH CAROLINA ESTABLISHED 1729

CFD Cape Fear Development

LS3P

101 NORTH THIRD STREET, SUITE 500
WILMINGTON, NORTH CAROLINA 28401
TEL. 910.790.3111 FAX. 910.790.9901
WWW.LS3P.COM

WOODS ENGINEERING Consulting Structural Engineers

254 North Front Street Phone: 910.343.8007
Suite 201 Fax: 910.343.8088
Wilmington, N.C. 28401 www.woodseng.com

WOODS ENGINEERING, P.A. CORPORATE SEAL No. C-1806 NORTH CAROLINA

NORTH CAROLINA PROFESSIONAL SEAL 19475 ENGINEER JOHN R. WOODS

COPYRIGHT 2023 ALL RIGHTS RESERVED. PRINTED OR ELECTRONIC DRAWINGS AND DOCUMENTATION MAY NOT BE REPRODUCED IN ANY FORM WITHOUT WRITTEN PERMISSION FROM LS3P ASSOCIATES LTD.

Project Grace

Grace Street
Wilmington, NC 28401

LS3P PROJECT: 7701-177600
WOODS PROJECT: 21-3351

Δ	DATE	DESCRIPTION
0	2023.05.22	PERMIT SET
2	2023.06.22	ADDENDUM #2

SHEET NAME:
STAIR TOWER FRAMING PLANS

ORIG SUBMISSION: 2023.05.22

SHEET: S-211

PERMIT SET

THE LINE SHOWN ABOVE IS EXACTLY ONE INCH LONG ON ARCH E SHEETS ORIGINAL PAGE SIZE

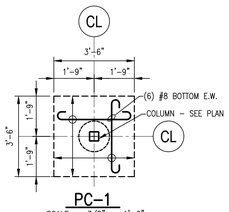

PC-1
SCALE: 3/8" = 1'-0"
3'-6" THICK

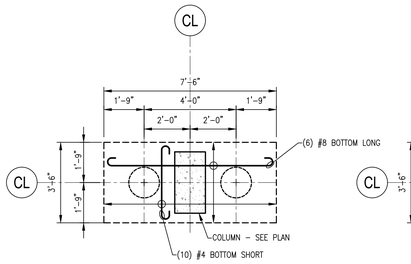

PC-2
SCALE: 3/8" = 1'-0"
3'-6" THICK

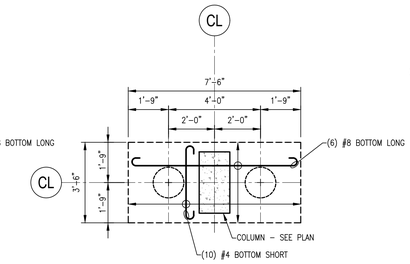

PC-2A
SCALE: 3/8" = 1'-0"
4'-0" THICK

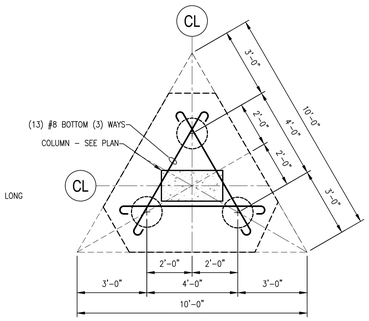

PC-3
SCALE: 3/8" = 1'-0"
3'-6" THICK

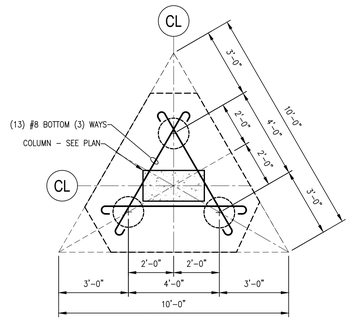

PC-3A
SCALE: 3/8" = 1'-0"
4'-0" THICK

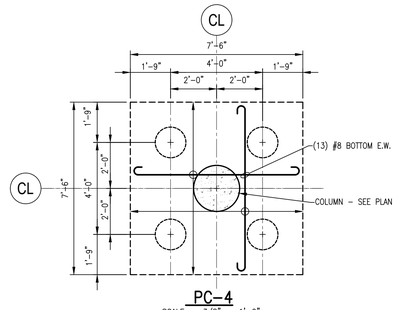

PC-4
SCALE: 3/8" = 1'-0"
3'-6" THICK

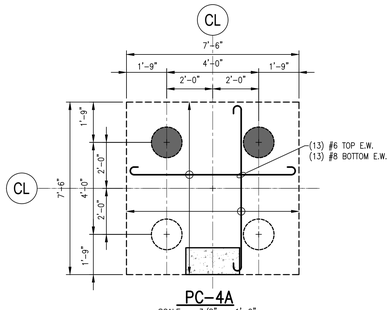

PC-4A
SCALE: 3/8" = 1'-0"
3'-6" THICK

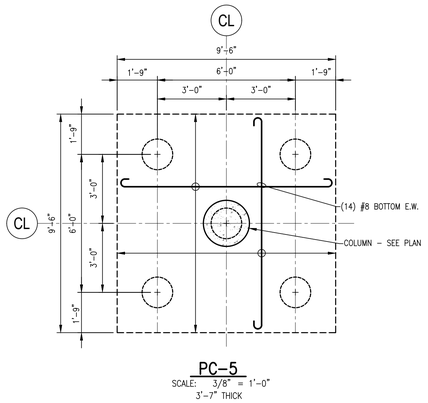

PC-5
SCALE: 3/8" = 1'-0"
3'-7" THICK

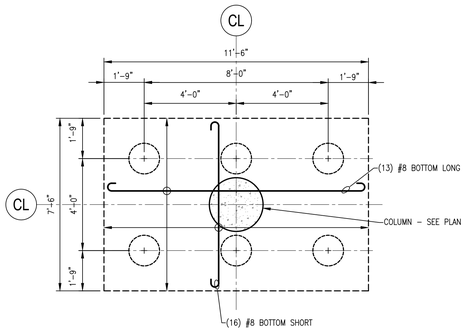

PC-6
SCALE: 3/8" = 1'-0"
4'-0" THICK

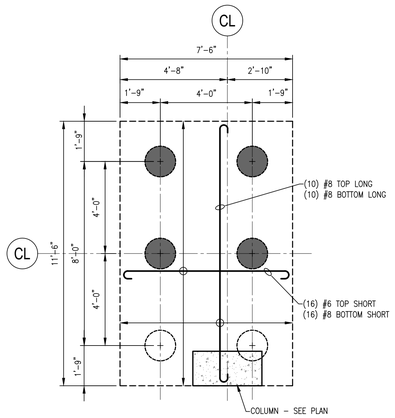

PC-6A
SCALE: 3/8" = 1'-0"
4'-0" THICK

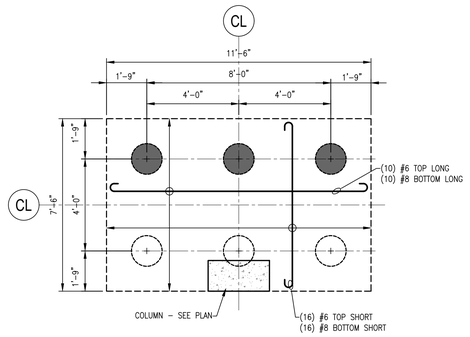

PC-6B
SCALE: 3/8" = 1'-0"
4'-0" THICK

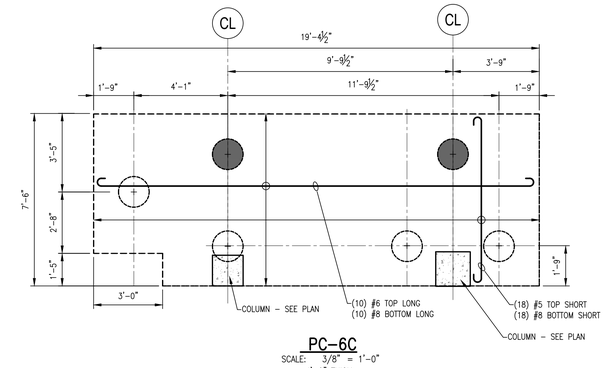

PC-6C
SCALE: 3/8" = 1'-0"
4'-0" THICK

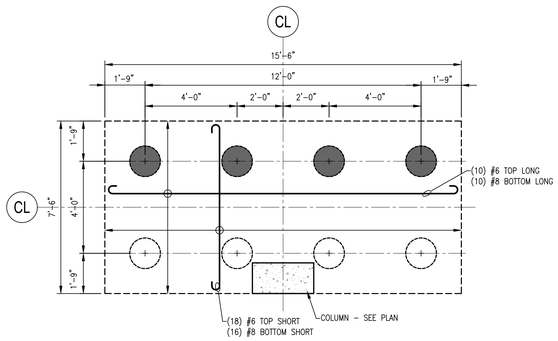

PC-8
SCALE: 3/8" = 1'-0"
4'-4" THICK

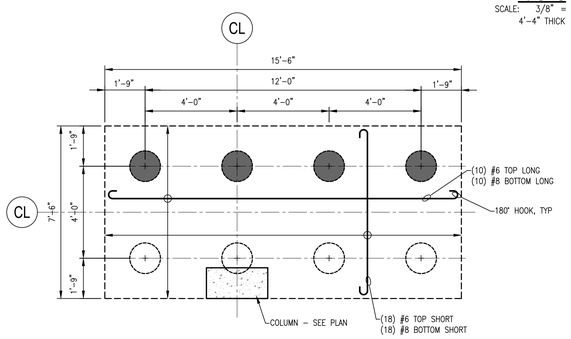

PC-8A
SCALE: 3/8" = 1'-0"
4'-4" THICK

PILE LEGEND

INDICATES UPLIFT PILES SEE SHEET S-301

INDICATES GRAVITY PILES SEE SHEET S-301

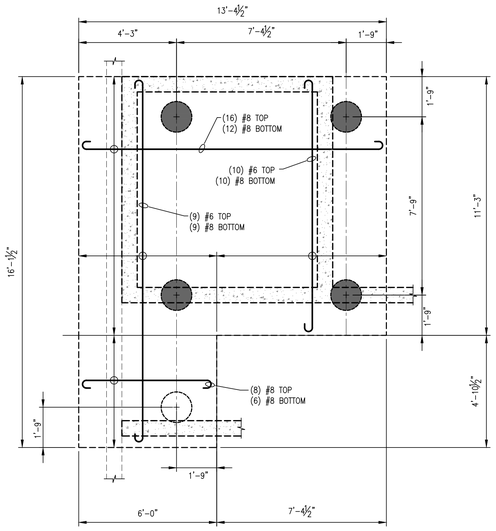

PC-5A
SCALE: 3/8" = 1'-0"
3'-8" THICK

NEW HANOVER COUNTY • NORTH CAROLINA • ESTABLISHED 1729

CFD Cape Fear Development

LS3P

101 NORTH THIRD STREET, SUITE 500
WILMINGTON, NORTH CAROLINA 28401
TEL. 910.790.3111 FAX. 910.790.9901
WWW.LS3P.COM

WOODS ENGINEERING
Consulting Structural Engineers

254 North Front Street Phone: 910.343.8007
Suite 201 Fax: 910.343.8088
Wilmington, NC 28401 www.woodseng.com

WOODS ENGINEERING, P.A. CORPORATE SEAL No. C-1806 NORTH CAROLINA

NORTH CAROLINA PROFESSIONAL SEAL 19475 ENGINEER DON R. WOODS

COPYRIGHT 2023 ALL RIGHTS RESERVED. PRINTED OR ELECTRONIC DRAWINGS AND DOCUMENTATION MAY NOT BE REPRODUCED IN ANY FORM WITHOUT WRITTEN PERMISSION FROM LS3P ASSOCIATES LTD.

Project Grace

Grace Street
Wilmington, NC 28401

LS3P PROJECT: 7701-177600
WOODS PROJECT: 21-3351

	DATE	DESCRIPTION
0	2023.05.22	PERMIT SET
2	2023.06.22	ADDENDUM #2

SHEET NAME:
GRAVITY PILE CAP PLANS

ORIG SUBMISSION: 2023.05.22

SHEET:
S-302

PERMIT SET

10/20/2021 8:48:37 AM

E D C B A

1 2 3 4 5 6

THE LINE SHOWN ABOVE IS EXACTLY ONE INCH LONG ON ARCH D SHEETS ORIGINAL PAGE SIZE

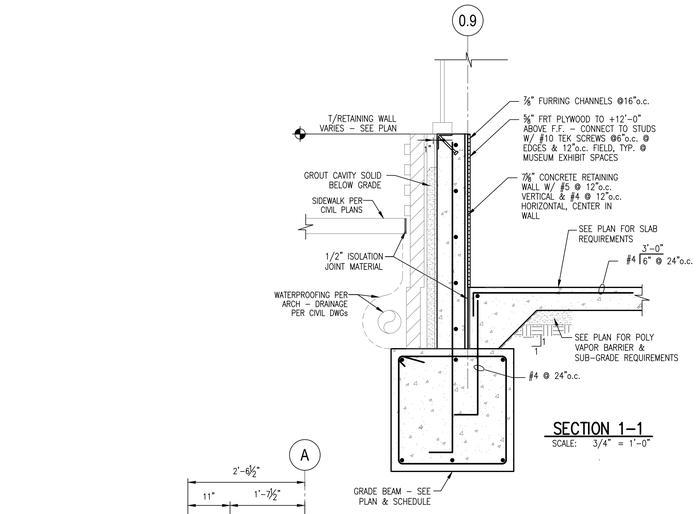

SECTION 1–1
SCALE: 3/4" = 1'-0"

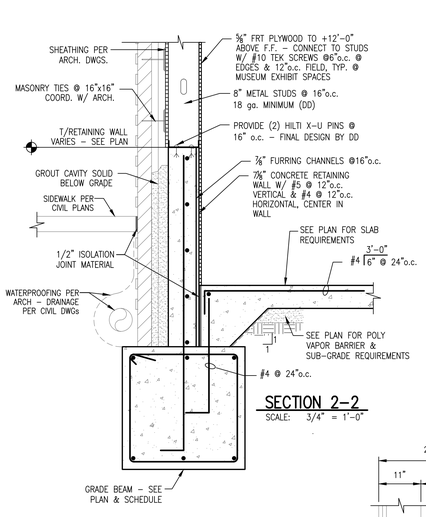

SECTION 2–2
SCALE: 3/4" = 1'-0"

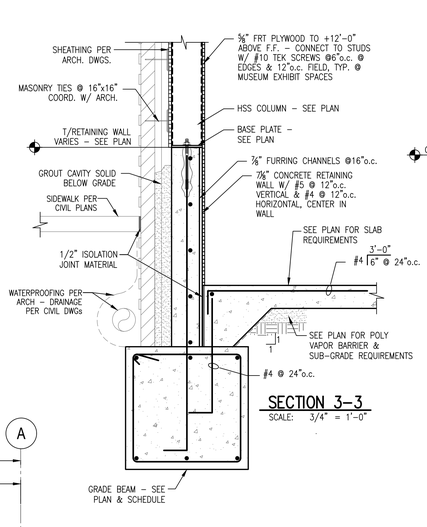

SECTION 3–3
SCALE: 3/4" = 1'-0"

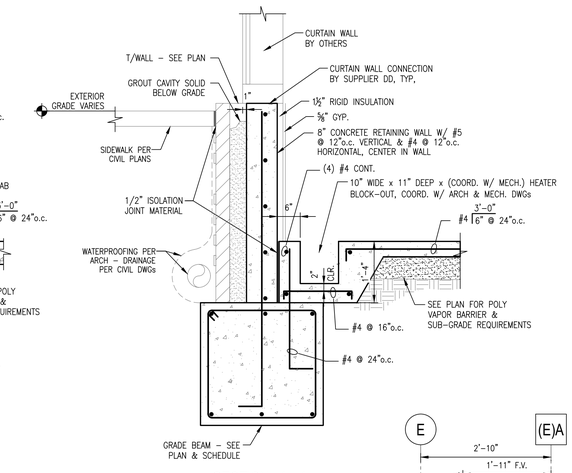

SECTION 4–4
SCALE: 3/4" = 1'-0"

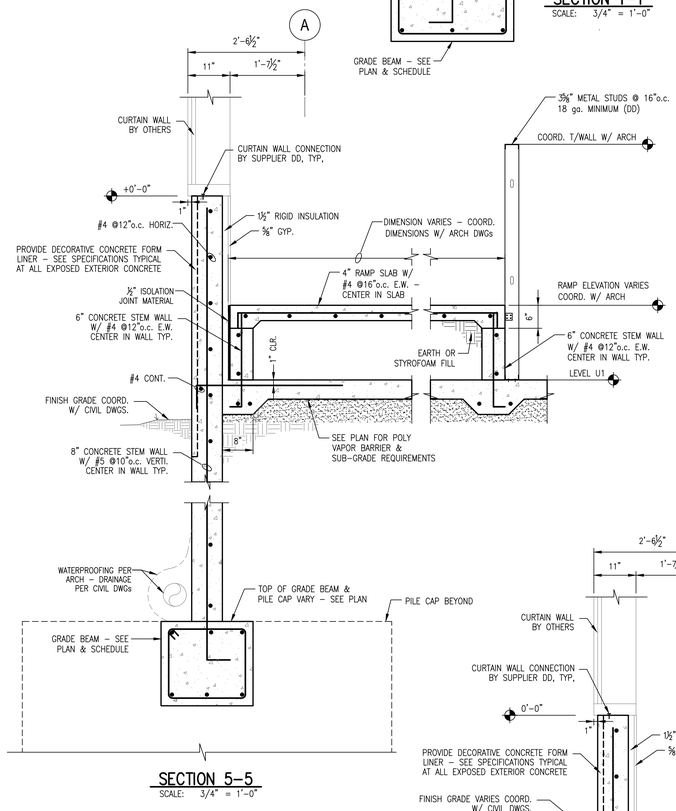

SECTION 5–5
SCALE: 3/4" = 1'-0"

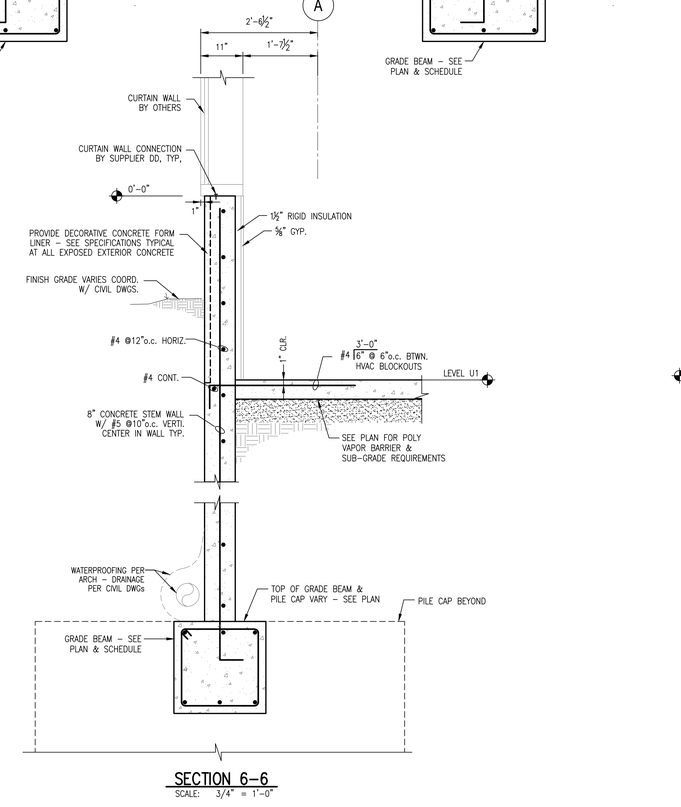

SECTION 6–6
SCALE: 3/4" = 1'-0"

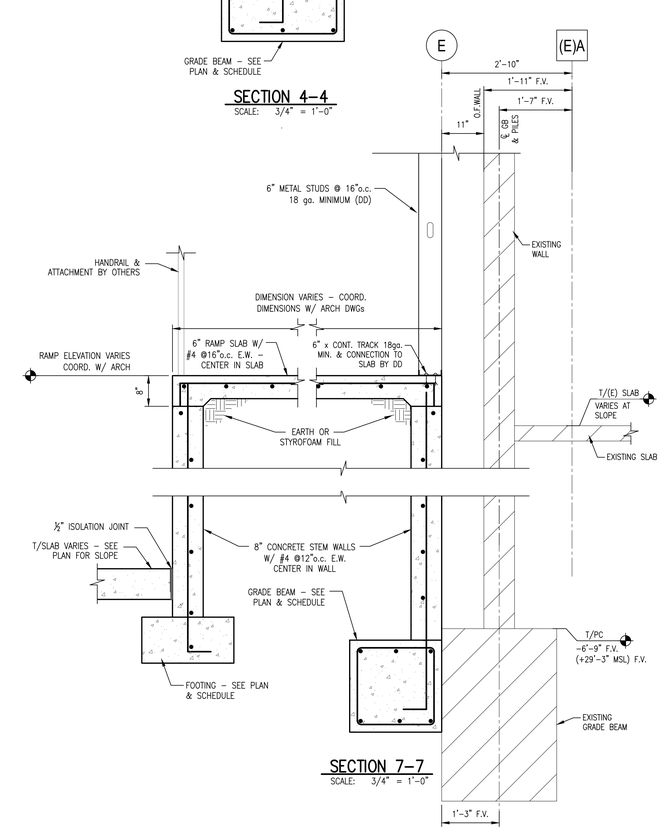

SECTION 7–7
SCALE: 3/4" = 1'-0"

SECTION 8–8
SCALE: 3/4" = 1'-0"
(DOCK LEVELER)

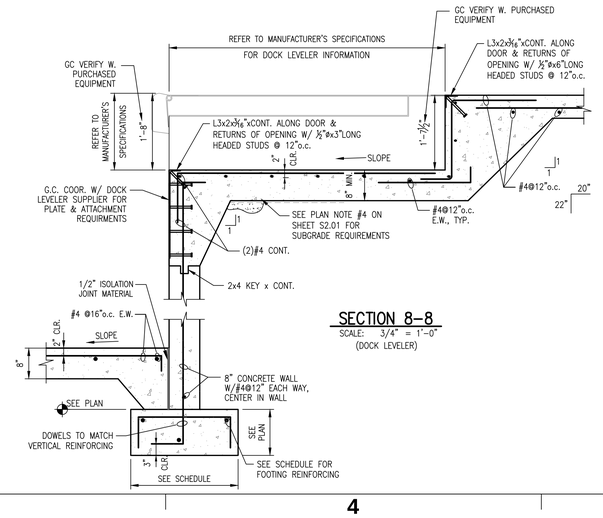

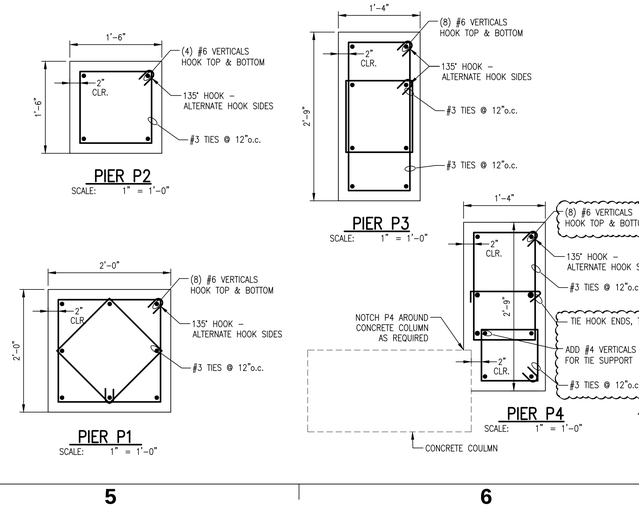

10/20/2021 8:48:37 AM

NEW HANOVER COUNTY • NORTH CAROLINA • ESTABLISHED 1729

CFD Cape Fear Development

LS3P

101 NORTH THIRD STREET, SUITE 500
WILMINGTON, NORTH CAROLINA 28401
TEL. 910.790.3111 FAX. 910.790.9901
WWW.LS3P.COM

WOODS ENGINEERING
Consulting Structural Engineers

254 North Front Street Phone: 910.343.8007
Suite 201 Fax: 910.343.8088
Wilmington, NC 28401 www.woodseng.com

WOODS ENGINEERING, P.A. CORPORATE SEAL No. C-1806 NORTH CAROLINA

NORTH CAROLINA PROFESSIONAL SEAL 19475 ENGINEER DON R. WOODS

COPYRIGHT 2023 ALL RIGHTS RESERVED. PRINTED OR ELECTRONIC DRAWINGS AND DOCUMENTATION MAY NOT BE REPRODUCED IN ANY FORM WITHOUT WRITTEN PERMISSION FROM LS3P ASSOCIATES LTD

Project Grace

Grace Street
Wilmington, NC 28401

LS3P PROJECT: 7701-177600
WOODS PROJECT: 21-3351

	DATE	DESCRIPTION
0	2023.05.22	PERMIT SET
2	2023.06.22	ADDENDUM #2

SHEET NAME:
FOUNDATION SECTIONS & DETAILS

ORIG SUBMISSION: 2023.05.22

SHEET: **S-305**

PERMIT SET

E D C B A

1 2 3 4 5 6

THE LINE SHOWN ABOVE IS EXACTLY ONE INCH LONG ON ALL SHEETS ORIGINAL PAGE SIZE

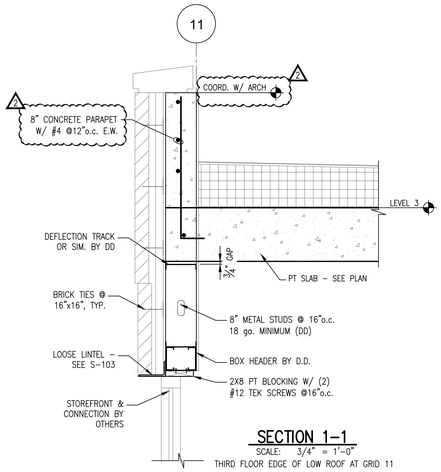

SECTION 1–1
SCALE: 3/4" = 1'–0"
THIRD FLOOR EDGE OF LOW ROOF AT GRID 11

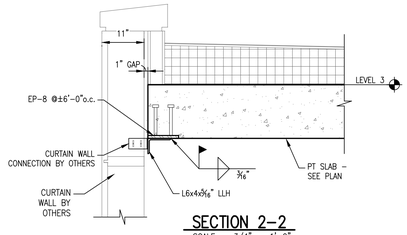

SECTION 2–2
SCALE: 3/4" = 1'–0"

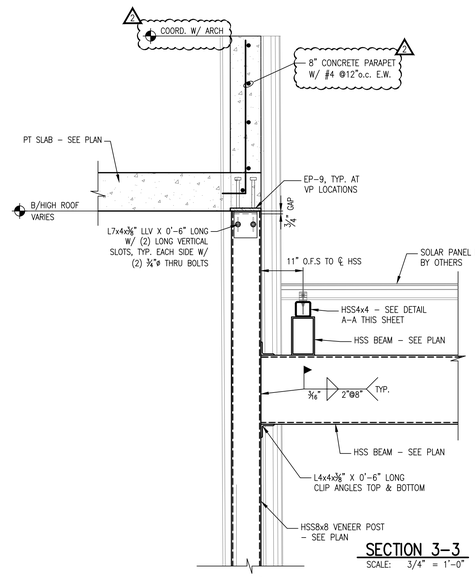

SECTION 3–3
SCALE: 3/4" = 1'–0"

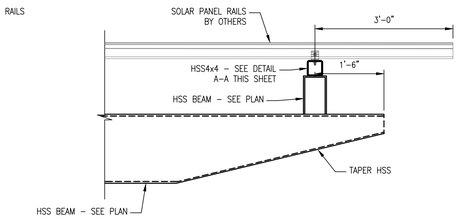

SECTION 4–4
SCALE: 3/4" = 1'–0"

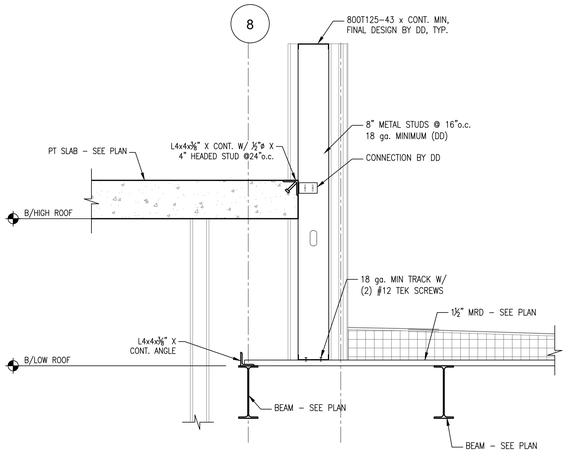

SECTION 5–5
SCALE: 3/4" = 1'–0"

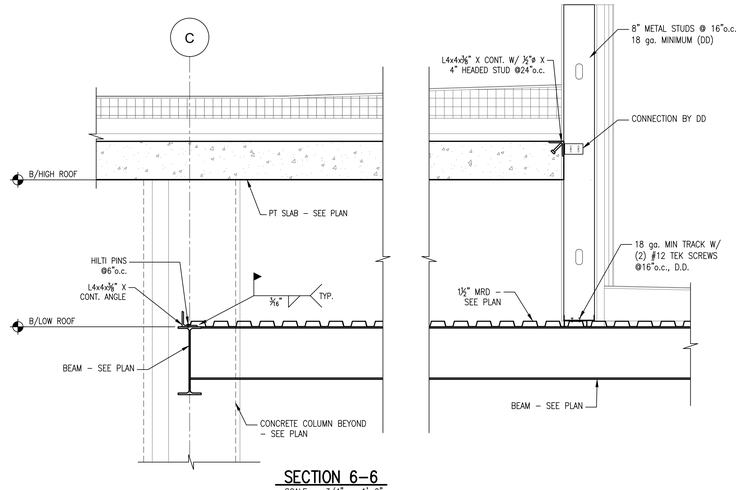

SECTION 6–6
SCALE: 3/4" = 1'–0"

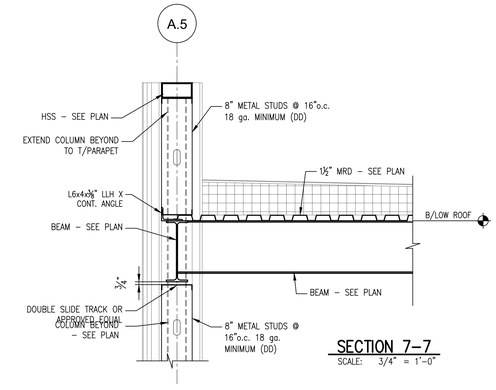

SECTION 7–7
SCALE: 3/4" = 1'–0"

SECTION 10–10
SCALE: 3/4" = 1'–0"

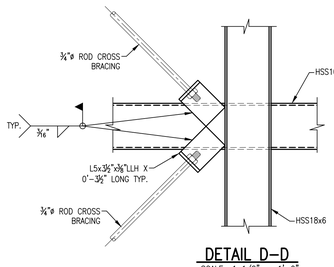

DETAIL D–D
SCALE: 1 1/2" = 1'–0"

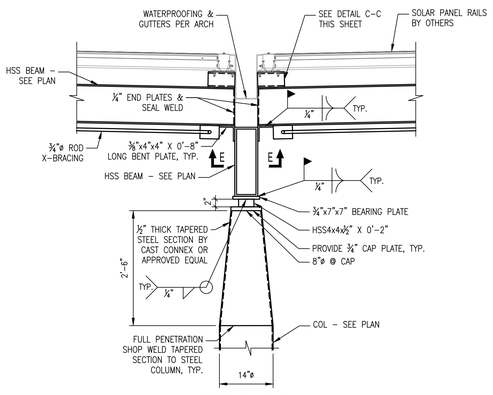

SECTION 8–8
SCALE: 3/4" = 1'–0"

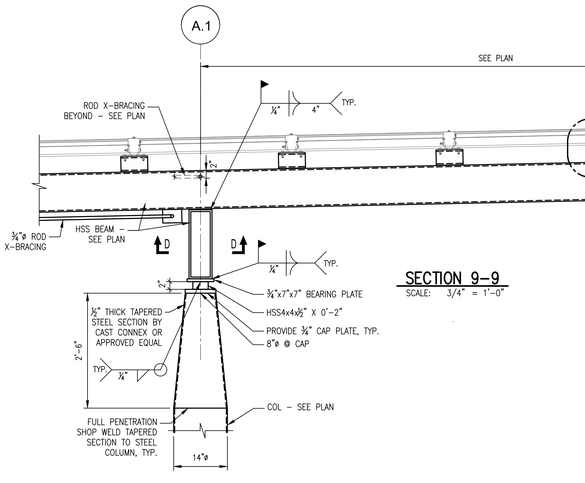

SECTION 9–9
SCALE: 3/4" = 1'–0"

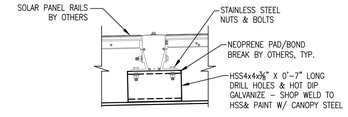

DETAIL C–C
SCALE: 1 1/2" = 1'–0"

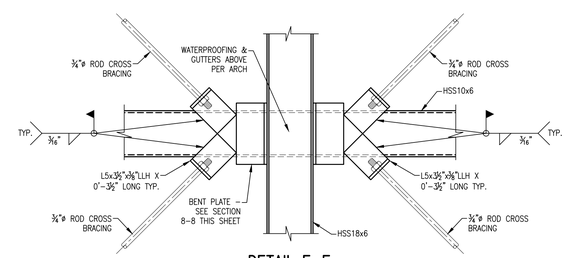

DETAIL E–E
SCALE: 1 1/2" = 1'–0"

101 NORTH THIRD STREET, SUITE 500
WILMINGTON, NORTH CAROLINA 28401
TEL. 910.790.3111 FAX. 910.790.9901
WWW.LS3P.COM

WOODS ENGINEERING
Consulting Structural Engineers
254 North Front Street Phone: 910.343.8007
Suite 201 Fax: 910.343.8088
Wilmington, NC 28401 www.woodseng.com

COPYRIGHT 2023 ALL RIGHTS RESERVED. PRINTED OR ELECTRONIC DRAWINGS AND DOCUMENTATION MAY NOT BE REPRODUCED IN ANY FORM WITHOUT WRITTEN PERMISSION FROM LS3P ASSOCIATES LTD.

Project Grace
Grace Street
Wilmington, NC 28401
LS3P PROJECT: 7701-177600
WOODS PROJECT: 21-3351

	DATE	DESCRIPTION
0	2023.05.22	PERMIT SET
2	2023.06.22	ADDENDUM #2

SHEET NAME:
FRAMING SECTIONS & DETAILS

ORIG SUBMISSION: 2023.05.22

SHEET:
S-402

PERMIT SET

10/20/2021 8:48:37 AM

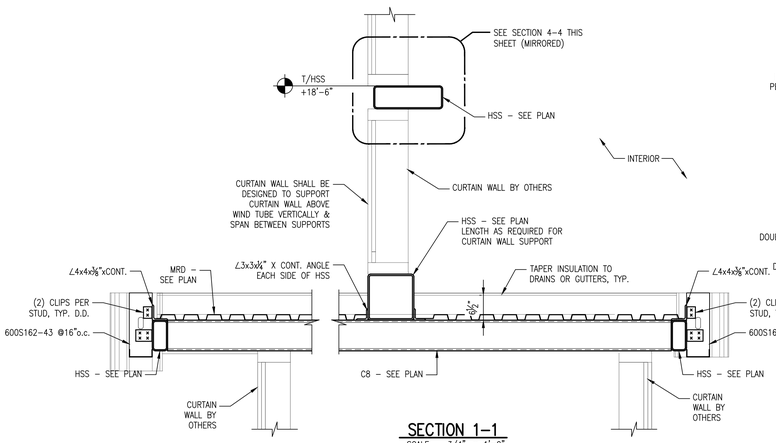

SECTION 1-1
SCALE: 3/4" = 1'-0"
VESTIBULE FRAMING

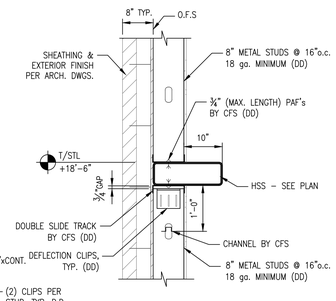

SECTION 2-2
SCALE: 3/4" = 1'-0"

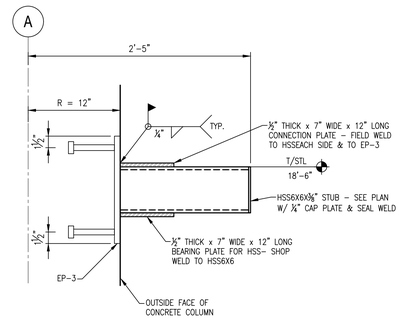

SECTION 3-3
SCALE: 1 1/2" = 1'-0"

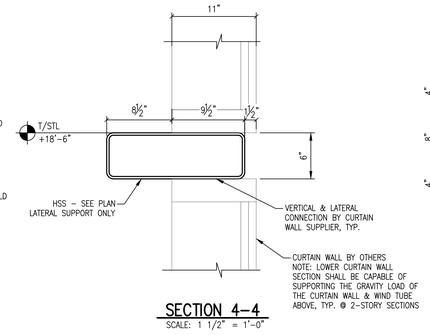

SECTION 4-4
SCALE: 1 1/2" = 1'-0"

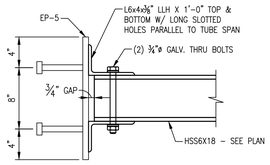

SECTION 5-5
SCALE: 1 1/2" = 1'-0"

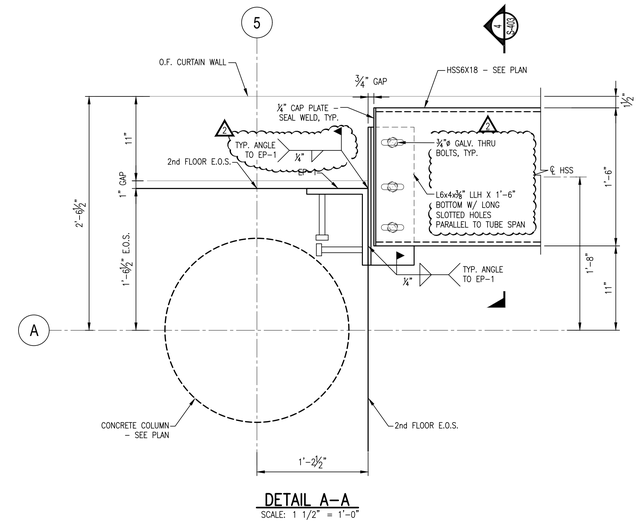

DETAIL A-A
SCALE: 1 1/2" = 1'-0"

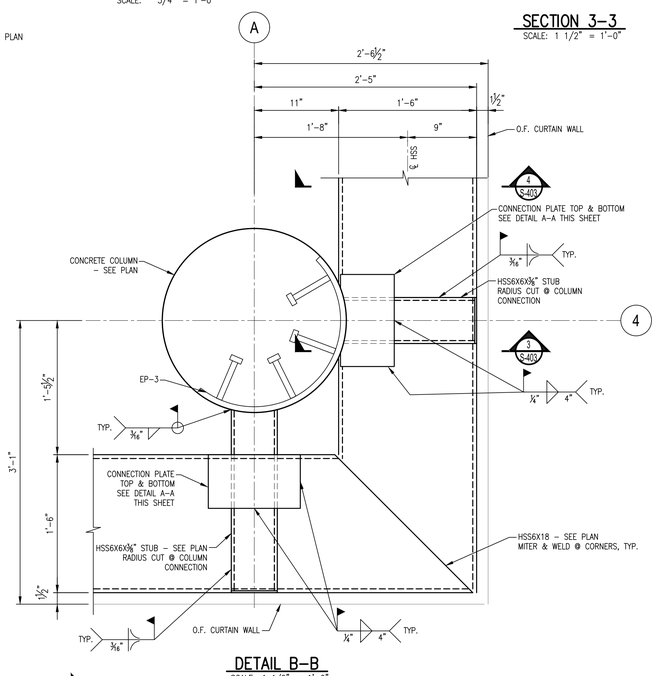

DETAIL B-B
SCALE: 1 1/2" = 1'-0"

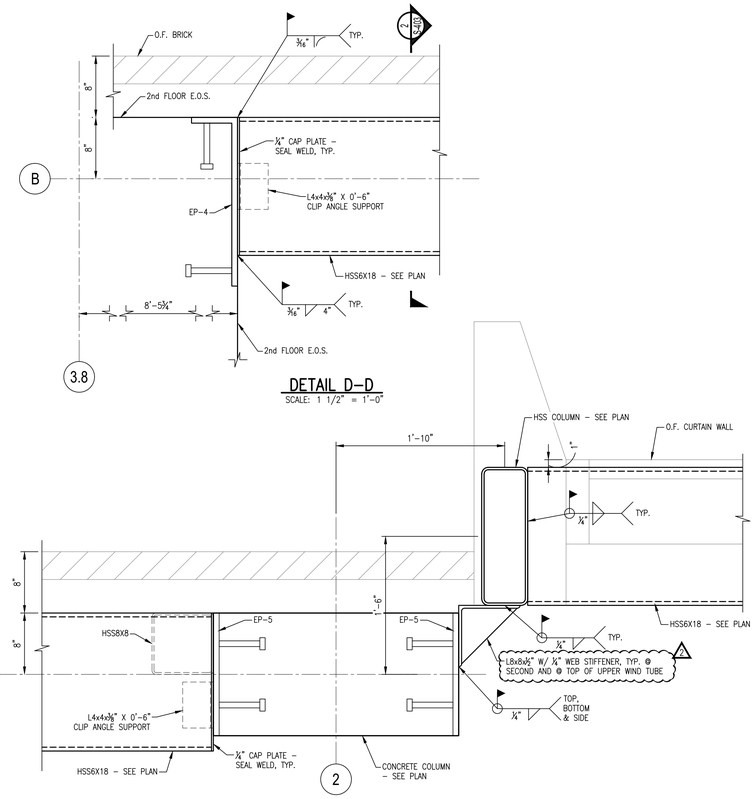

DETAIL D-D
SCALE: 1 1/2" = 1'-0"

DETAIL F-F
SCALE: 1 1/2" = 1'-0"

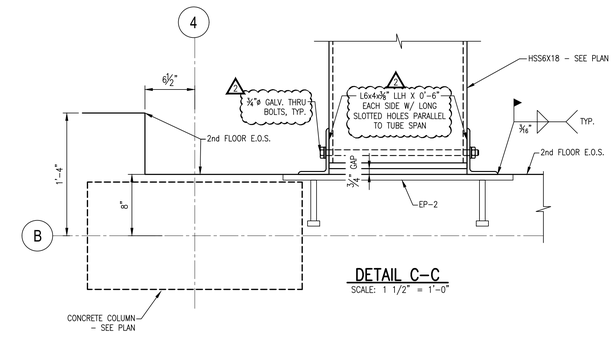

DETAIL C-C
SCALE: 1 1/2" = 1'-0"

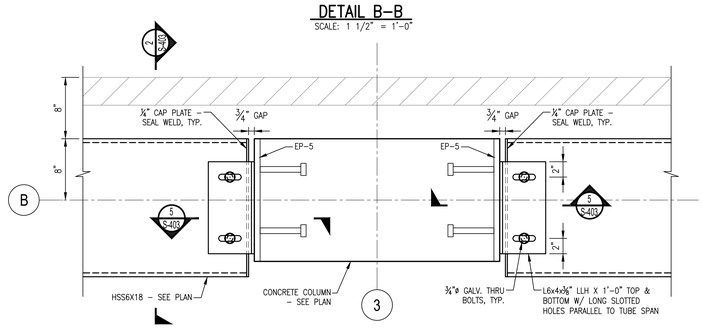

DETAIL E-E
SCALE: 1 1/2" = 1'-0"

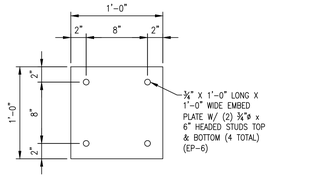

EMBED PLATE "EP-6"
SCALE: 1 1/2" = 1'-0"

EMBED PLATE "EP-7"
SCALE: 1 1/2" = 1'-0"

EMBED PLATE "EP-8"
SCALE: 1 1/2" = 1'-0"

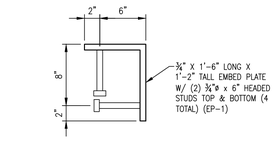

EMBED PLATE "EP-1"
SCALE: 1 1/2" = 1'-0"

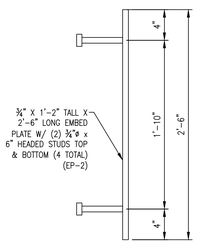

EMBED PLATE "EP-2"
SCALE: 1 1/2" = 1'-0"

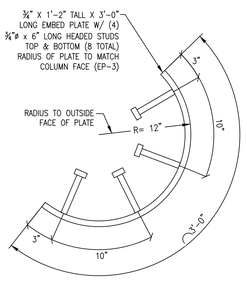

EMBED PLATE "EP-3"
SCALE: 1 1/2" = 1'-0"

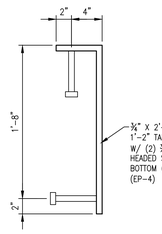

EMBED PLATE "EP-4"
SCALE: 1 1/2" = 1'-0"

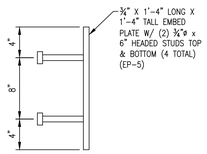

EMBED PLATE "EP-5"
SCALE: 1 1/2" = 1'-0"

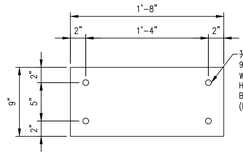

EMBED PLATE "EP-9"
SCALE: 1 1/2" = 1'-0"

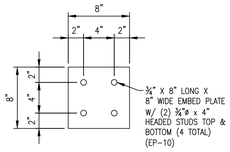

EMBED PLATE "EP-10"
SCALE: 1 1/2" = 1'-0"

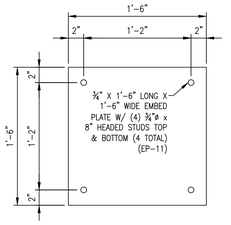

EMBED PLATE "EP-11"
SCALE: 1 1/2" = 1'-0"

COPYRIGHT 2023 ALL RIGHTS RESERVED. PRINTED OR ELECTRONIC DRAWINGS AND DOCUMENTATION MAY NOT BE REPRODUCED IN ANY FORM WITHOUT WRITTEN PERMISSION FROM LS3P ASSOCIATES LTD.

LS3P
101 NORTH THIRD STREET, SUITE 500
WILMINGTON, NORTH CAROLINA 28401
TEL. 910.790.3111 FAX. 910.790.9901
WWW.LS3P.COM

WOODS ENGINEERING
Consulting Structural Engineers
254 North Front Street Phone: 910.343.8007
Suite 201 Fax: 910.343.8088
Wilmington, NC 28401 www.woodseng.com

Project Grace
Grace Street
Wilmington, NC 28401
LS3P PROJECT: 7701-177600
WOODS PROJECT: 21-3351

DATE	DESCRIPTION
0 2023.05.22	PERMIT SET
2 2023.06.22	ADDENDUM #2

SHEET NAME:
FRAMING SECTIONS & DETAILS

ORIG SUBMISSION: 2023.05.22

SHEET:
S-403

PERMIT SET

10/20/2021 8:48:37 AM

THE LINE SHOWN ABOVE IS EXACTLY ONE INCH LONG ON ARCH D SHEETS ORIGINAL PAGE SIZE

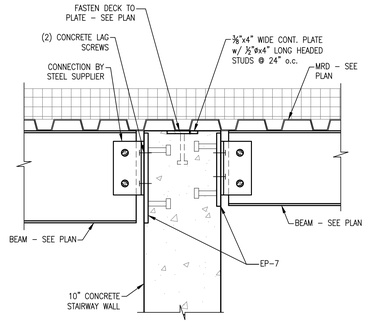

SECTION 1–1
SCALE: 1 1/2" = 1'–0"

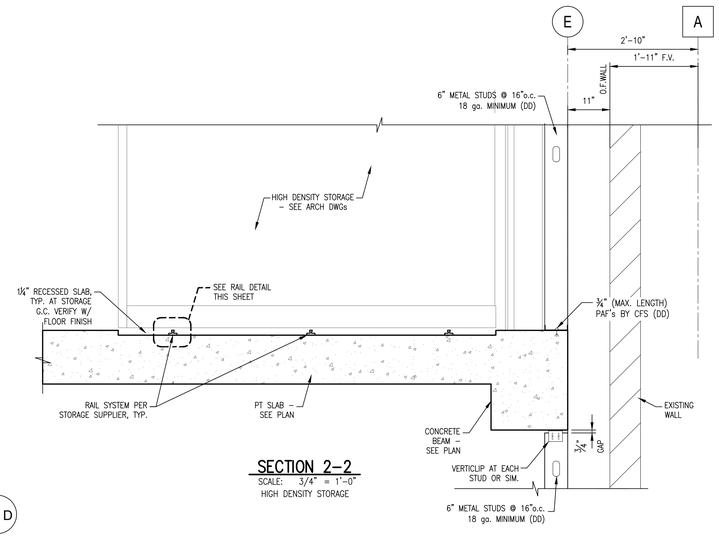

SECTION 2–2
SCALE: 3/4" = 1'–0"
HIGH DENSITY STORAGE

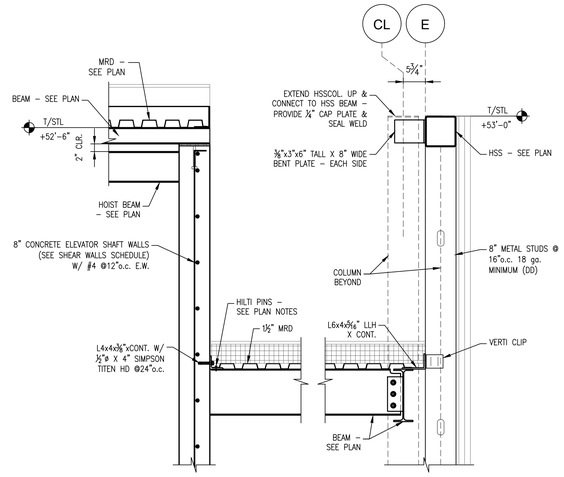

SECTION 3–3
SCALE: 3/4" = 1'–0"

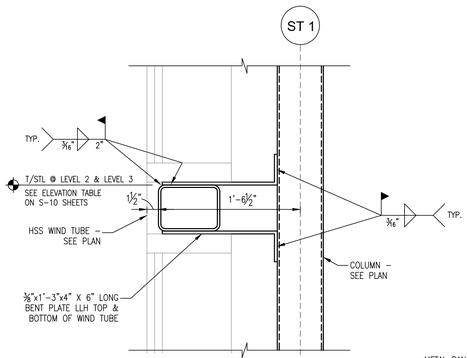

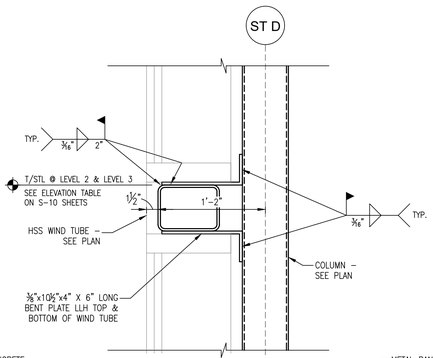

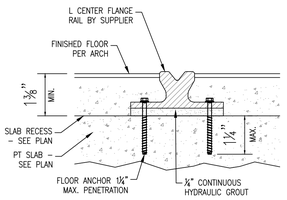

CENTER FLANGE, GUIDE RAIL

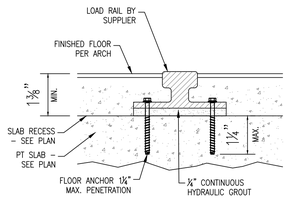

CENTER FLANGE, LOAD RAIL

RAIL DETAILS
SCALE: 6" = 1'–0"

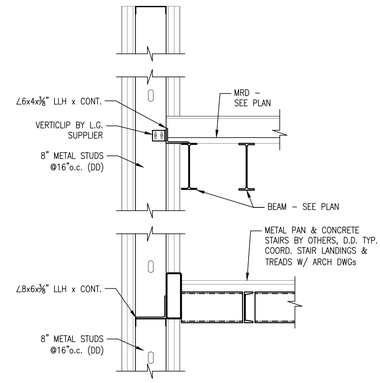

SECTION 8–8
SCALE: 3/4" = 1'–0"

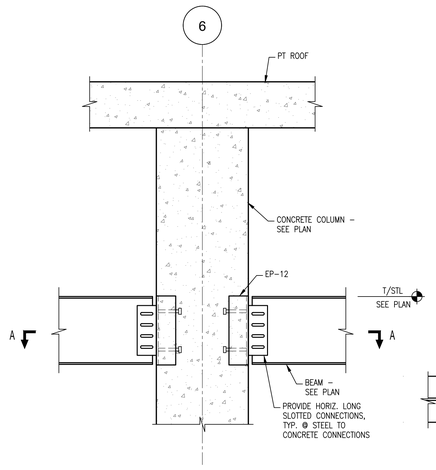

SECTION 9–9
SCALE: 3/4" = 1'–0"

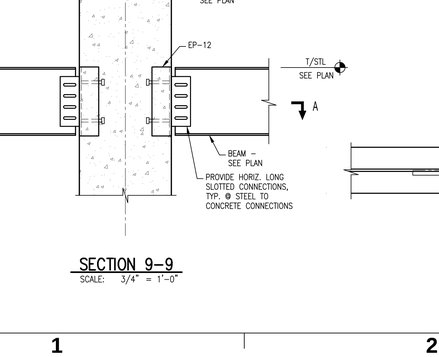

SECTION 4–4
SCALE: 1 1/2" = 1'–0"
STAIR TOWER WIND TUBE & MOMENT CONNECTION ALONG GRID ST 1

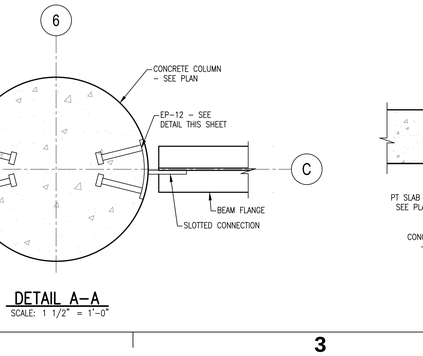

SECTION 5–5
SCALE: 1 1/2" = 1'–0"
STAIR TOWER WIND TUBE & MOMENT CONNECTION ALONG GRID ST D

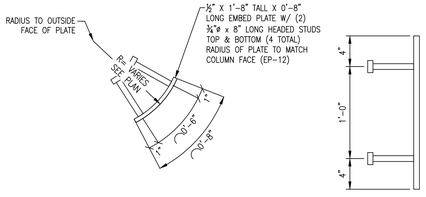

EMBED PLATE "EP–12"
SCALE: 1 1/2" = 1'–0"

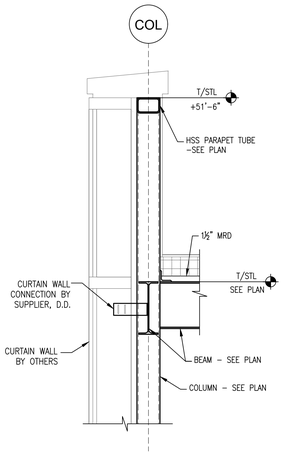

SECTION 6–6
SCALE: 3/4" = 1'–0"

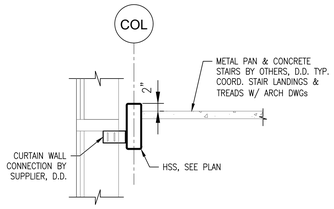

SECTION 7–7
SCALE: 3/4" = 1'–0"

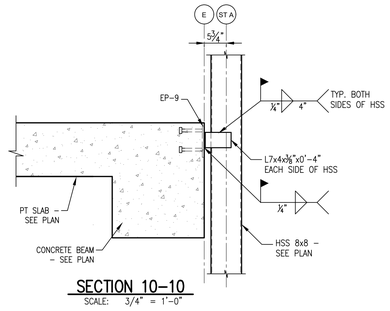

SECTION 10–10
SCALE: 3/4" = 1'–0"

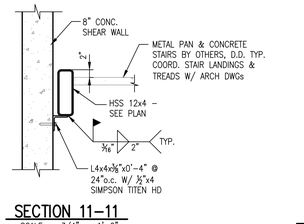

SECTION 11–11
SCALE: 3/4" = 1'–0"

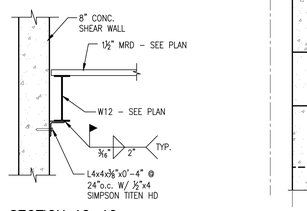

SECTION 12–12
SCALE: 3/4" = 1'–0"

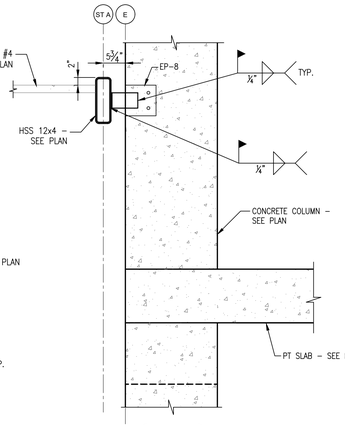

SECTION 13–13
SCALE: 3/4" = 1'–0"

DETAIL A–A
SCALE: 1 1/2" = 1'–0"

NEW HANOVER COUNTY • NORTH CAROLINA • ESTABLISHED 1729

CFD Cape Fear Development

LS3P

101 NORTH THIRD STREET, SUITE 500
WILMINGTON, NORTH CAROLINA 28401
TEL. 910.790.3111 FAX. 910.790.9901
WWW.LS3P.COM

WOODS ENGINEERING
Consulting Structural Engineers

254 North Front Street Phone: 910.343.8007
Suite 201 Fax: 910.343.8088
Wilmington, NC 28401 www.woodseng.com

WOODS ENGINEERING, P.A. CORPORATE SEAL No. C-1806 NORTH CAROLINA

NORTH CAROLINA PROFESSIONAL SEAL 19475 ENGINEER DON R. WOODS

COPYRIGHT 2023 ALL RIGHTS RESERVED. PRINTED OR ELECTRONIC DRAWINGS AND DOCUMENTATION MAY NOT BE REPRODUCED IN ANY FORM WITHOUT WRITTEN PERMISSION FROM LS3P ASSOCIATES LTD

Project Grace

Grace Street
Wilmington, NC 28401

LS3P PROJECT: 7701-177600
WOODS PROJECT: 21-3351

	DATE	DESCRIPTION
0	2023.05.22	PERMIT SET
2	2023.06.22	ADDENDUM #2

SHEET NAME:
FRAMING SECTIONS & DETAILS

ORIG SUBMISSION: 2023.05.22

SHEET:
S-404

PERMIT SET

10/20/2021 8:48:37 AM

E D C B A

1 2 3 4 5 6

THE LINE ABOVE IS EXACTLY ONE INCH LONG ON ALL SHEETS ORIGINAL PAGE SIZE

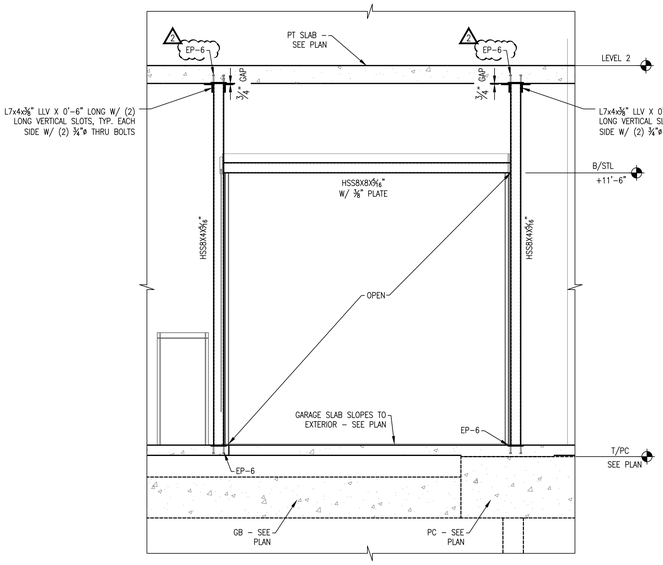

ELEVATION 1-1
SCALE: 1/4" = 1'-0"

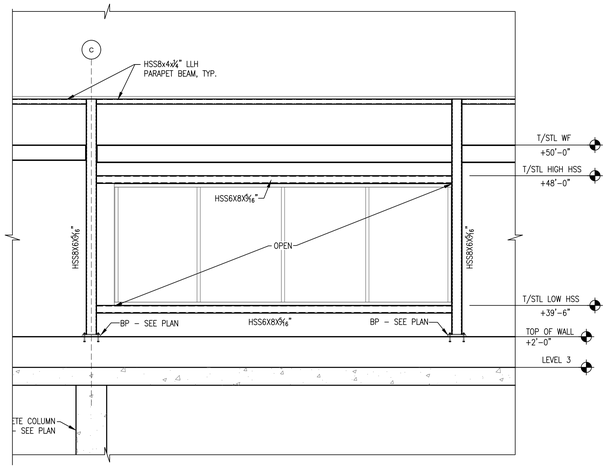

ELEVATION 2-2
SCALE: 1/4" = 1'-0"

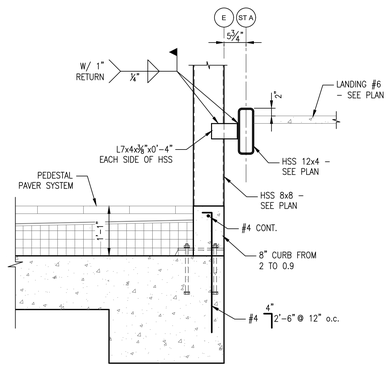

SECTION 3-3
SCALE: 3/4" = 1'-0"

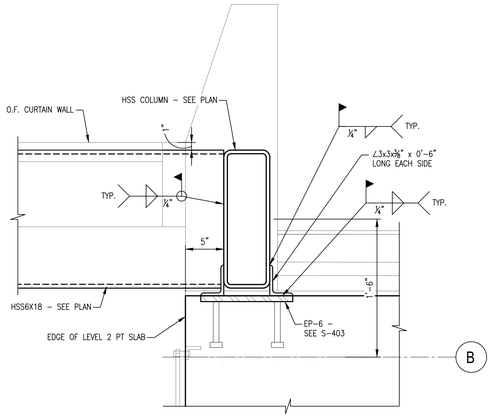

DETAIL G-G
SCALE: 1 1/2" = 1'-0"

101 NORTH THIRD STREET, SUITE 500
WILMINGTON, NORTH CAROLINA 28401
TEL. 910.790.3111 FAX. 910.790.9901
WWW.LS3P.COM

WOODS ENGINEERING
Consulting Structural Engineers
254 North Front Street Phone: 910.343.8007
Suite 201 Fax: 910.343.8088
Wilmington, NC 28401 www.woodseng.com

COPYRIGHT 2023 ALL RIGHTS RESERVED. PRINTED OR ELECTRONIC DRAWINGS AND DOCUMENTATION MAY NOT BE REPRODUCED IN ANY FORM WITHOUT WRITTEN PERMISSION FROM LS3P ASSOCIATES LTD

Project Grace

Grace Street
Wilmington, NC 28401

LS3P PROJECT: 7701-177600
WOODS PROJECT: 21-3351

DATE	DESCRIPTION
0 2023.05.22	PERMIT SET
2 2023.06.22	ADDENDUM #2

SHEET NAME:
FRAMING ELEVATIONS

ORIG SUBMISSION: 2023.05.22

SHEET:
S-405

PERMIT SET

10/20/2021 8:48:37 AM

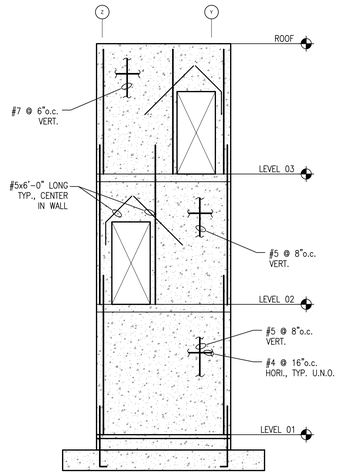

SW-9 ELEVATION
SCALE: 3/16" = 1'-0"

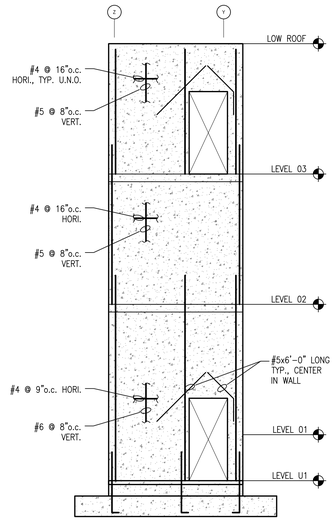

SW-10 ELEVATION
SCALE: 3/16" = 1'-0"

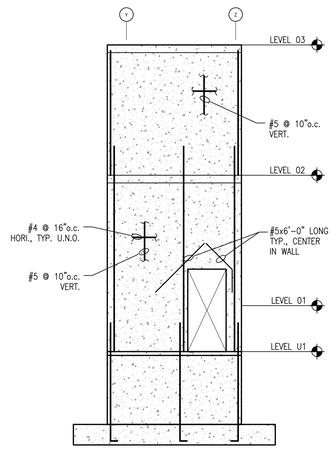

SW-11 ELEVATION
SCALE: 3/16" = 1'-0"

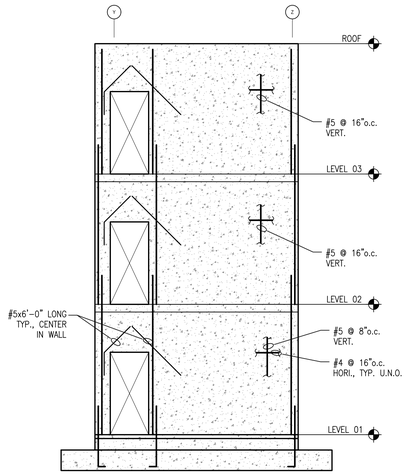

SW-12 ELEVATION
SCALE: 3/16" = 1'-0"

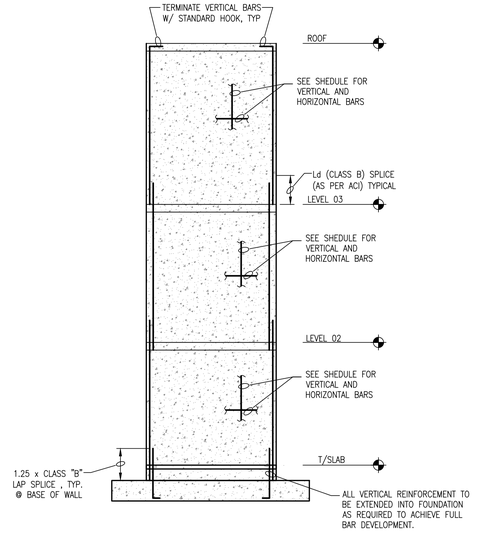

SCHEDULED SHEAR WALLS
SCALE: 3/16" = 1'-0"
(SEE PLAN FOR SW LOCATIONS)
(NOT ALL SHEAR WALLS ARE FULL HEIGHT AS SHOWN - SEE PLAN)

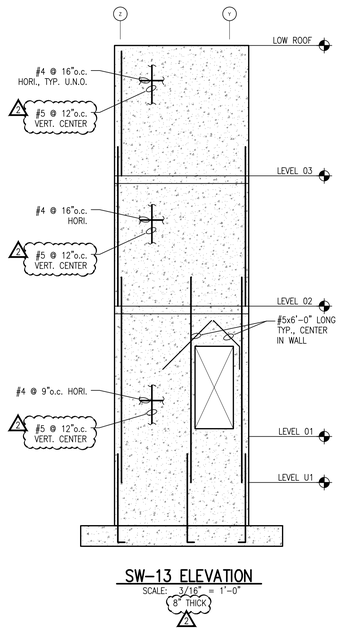

SW-13 ELEVATION
SCALE: 3/16" = 1'-0"
1 8" THICK

SHEAR WALL NOTES:

1. SEE S1 SHEETS FOR SHEAR WALL CONCRETE STRENGTH.
2. ALL REINFORCEMENT SHOWN IS EACH FACE.
3. ALL SHEAR WALLS ARE 10" THICK U.N.O.
4. REINFORCEMENT SHOWN IN ELEVATIONS IS CONSISTENT BETWEEN FLOORS, U.N.O.
5. PROVIDE VERTICAL BARS AT CORNERS AND JAMBS TO MATCH SIZE OF BARS CALLED OUT IN SCHEDULE AND ELEVATIONS.
6. IF REINFORCEMENT SHOWN IN SECTIONS DIFFERS FROM SCHEDULES OR ELEVATIONS THE MORE STRENUOUS APPLIES.

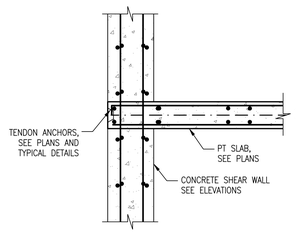

DETAIL A-A
SCALE: 3/4" = 1'-0"

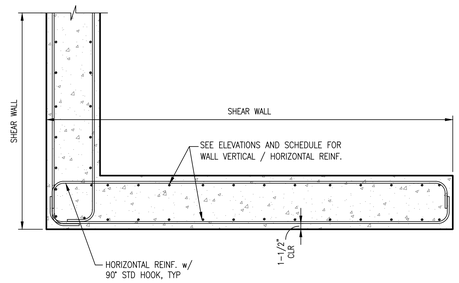

SECTION "B"
TYP. REINFORCED CONCRETE SHEAR WALL CROSS-SECTION
NOT TO SCALE

CONCRETE SHEAR WALL (CSW) SCHEDULE

WALLS ID ®	SW-1		SW-2		SW-3		SW-4		SW-5		SW-6		SW-7		SW-8		SW-14 8" THICK 1	
FLOOR ⁻	VERTICAL BARS EACH FACE	HORIZONTAL BARS EACH FACE	VERTICAL BARS EACH FACE	HORIZONTAL BARS EACH FACE	VERTICAL BARS EACH FACE	HORIZONTAL BARS EACH FACE	VERTICAL BARS EACH FACE	HORIZONTAL BARS EACH FACE	VERTICAL BARS EACH FACE	HORIZONTAL BARS EACH FACE	VERTICAL BARS EACH FACE	HORIZONTAL BARS EACH FACE	VERTICAL BARS EACH FACE	HORIZONTAL BARS EACH FACE	VERTICAL BARS EACH FACE	HORIZONTAL BARS EACH FACE	VERTICAL BARS CENTER	HORIZONTAL BARS CENTER
LEVEL 3 TO ROOF	-	-	#4 @ 8"o.c.	TYP	#4 @ 10"o.c.	TYP	#4 @ 16"o.c.	TYP	#4 @ 16"o.c.	TYP	#5 @ 16"o.c.	TYP	#5 @ 12"o.c.	TYP	#5 @ 16"o.c.	TYP	#5 @ 12"o.c.	TYP
LEVEL 2 TO LEVEL 3	#4 @ 9"o.c.	TYP	#5 @ 8"o.c.	TYP	#4 @ 10"o.c.	TYP	#4 @ 16"o.c.	TYP	#5 @ 16"o.c.	TYP	#5 @ 16"o.c.	TYP	#5 @ 12"o.c.	TYP	#5 @ 8"o.c.	TYP	#5 @ 12"o.c.	TYP
FOUNDATION to LEVEL 2	#5 @ 9"o.c.	TYP	#5 @ 8"o.c.	TYP	#6 @ 10"o.c.	TYP	#5 @ 16"o.c.	#4 @ 12"o.c.	#5 @ 8"o.c.	TYP	#5 @ 8"o.c.	TYP	#5 @ 12"o.c.	TYP	#5 @ 8"o.c.	TYP	#5 @ 12"o.c.	TYP

1. 'TYP' INDICATES #4's @ 16"o.c.
2. FOR WALLS NOT LISTED IN THIS TABLE SEE ELEVATIONS THIS SHEET
3. ALL REINFORCEMENT IS EACH FACE
4. SEE DETAIL A AND SECTION B THIS SHEET FOR SHEAR WALL SECTION
5. ALL SHEAR WALLS ARE 10" THICK U.N.O.

THE LINE BELOW ABOVE IS EXACTLY ONE INCH LONG ON ARCH D SHEETS ORIGINAL PAGE SIZE

NEW HANOVER COUNTY • NORTH CAROLINA • ESTABLISHED 1729
CFD Cape Fear Development
LS3P
101 NORTH THIRD STREET, SUITE 500
WILMINGTON, NORTH CAROLINA 28401
TEL. 910.790.3111 FAX. 910.790.9901
WWW.LS3P.COM
WOODS ENGINEERING Consulting Structural Engineers
254 North Front Street Phone: 910.343.8007
Suite 201 Fax: 910.343.8088
Wilmington, NC 28401 www.woodseng.com
WOODS ENGINEERING, P.A. CORPORATE SEAL No. C-1806 NORTH CAROLINA
NORTH CAROLINA PROFESSIONAL SEAL 19475 ENGINEER DON R. WOODS

COPYRIGHT 2023 ALL RIGHTS RESERVED. PRINTED OR ELECTRONIC DRAWINGS AND DOCUMENTATION MAY NOT BE REPRODUCED IN ANY FORM WITHOUT WRITTEN PERMISSION FROM LS3P ASSOCIATES LTD.

Project Grace
Grace Street
Wilmington, NC 28401
LS3P PROJECT: 7701-177600
WOODS PROJECT: 21-3351

	DATE	DESCRIPTION
0	2023.05.22	PERMIT SET
2	2023.06.22	ADDENDUM #2

SHEET NAME:
CONCRETE SHEAR WALLS

ORIG SUBMISSION: 2023.05.22

SHEET:
S-501

PERMIT SET

10/20/2021 8:48:37 AM