BOWMAN MURRAY HEMINGWAY ARCHITECTS
514 Market Street, Wilmington NC 28401
phone 910.762.2621
www.bmharch.com

January 16, 2025

ADDENDUM #4

Coastal Carolina Community College
Learning Resources Center
First Floor Renovation
SCO ID: 23-26060-01A

This addendum forms a part of the contract documents and modifies the original drawings and project manual dated November 25, 2024. The enclosed additions, deletions, corrections, and changes shall be as binding as if incorporated in the original documents. All General Conditions, Special Conditions, etc. as originally specified shall apply to these items. Acknowledgement of receipt of this addendum will be required as part of the contract agreement.

Item 1 **The bid date, time, and place remain the same:** The bid will be held Tuesday, January 28, 2025, at **2:00 pm** in the 2nd Floor Conference Room (Room 207) of the Institutional Support Services Building at Coastal Carolina Community College, 444 Western Boulevard, Jacksonville, North Carolina 28546.

Item 2 **Form of Proposal – Alternate #3 Language - Clarification**

The language for Alternate #3 on the Form of Proposal has been revised. Revisions have been highlighted. The revised Form of Proposal is included as **Attachment #1.**

Item 3 **Specification Section – 012300 Alternates (Scope and Owner Preferred Alternates)**

The language for Alternate #3 in specification section 012300 Alternates (Scope and Owner Preferred Alternates) has been revised. Alternate #3 shall be as follows:

Alternate #3: State the amount to be added to the base bid to provide labor and material for precast terrazzo treads and risers and precast terrazzo tiles as delineated at the central stair on drawing sheet A5.0 and in specification section 096623 Resinous Matrix Terrazzo Flooring. Work to include removal of metal nosing at existing stair treads. Base bid shall include sheet carpeting at central stair as specified.

Item 4 **Specification Section – 075400 Thermoplastic Single-Ply Roofing – Revision**

There is a discrepancy between the drawings and specifications for the thermoplastic single-ply roofing. The drawings call for the roof membrane to be fully adhered and the specifications call for the roof membrane to be mechanically attached. The intent of the drawings is correct. The specifications have been revised and the revisions are highlighted. Specification Section 075400 Thermoplastic Single-Ply Roofing is re-issued as **Attachment #2.**

Item 5 **Drawings – A5.0 - Clarification**

A note on drawing 3/A5.0 incorrectly calls out a '1 ½" Aluminum Handrail', this note has been revised to clarify the handrail is stainless steel. Revised drawing sheet A5.0 is included as **Attachment #3.**

Item 6 **Drawings – A6.1 - Revisions**

Notations have been added to clarify the glazing at the automatic sliding door units. Notations have been added to Window Elevation W-3 to clarify aluminum storefront framing requirements at this location. Revised drawing sheet A6.1 is included as **Attachment #4.**

Item 7 **Drawings – E-0.8 and EP1.4 – Telecommunications Clarification**

Notations have been added to drawing sheets E-0.8 and EP1.4 to protect existing backbone cabling and a fiber termination cabinet, as well as, maintain terminations at both ends (existing 2nd floor IT room and above ceiling at the location of new IT 122). Upon completion of new room IT 122 and complete installation of racks, mount existing termination cabinet in new rack. Sufficient cabling is existing to extend to new rack.

Revised drawing sheet EP1.4 calls for existing MCNC fiber optic raceway and cable to be protected during construction.

Revised drawing sheet E-0.8 is included as **Attachment #5.** Revised drawing sheet EP1.4 is included as **Attachment #6.**

SUBSTITUTION REQUESTS STATUS

All product substitutions listed as "Allowed" shall comply with all requirements of the drawings and specifications. It is the responsibility of the General Contractor to ensure that substitute products installed will function properly with Base Bid and Alternate work shown and specified in the construction documents. The General Contractor shall bear the cost of any modifications, material changes, and additional testing necessary to incorporate substitute products should they be required.

Spec Section	Item	Manufacturer	Response
232116-2.3 & 2.4	Hydronic Piping Specialties	Grundfos	Allowed
232123	Hydronic Pumps	Grundfos	Allowed
238126	Split Systems – DAH/DCU	Samsung	Allowed
238146.13	Water to Air Heat Pumps	United Coolair	Allowed
238146.13	DOAS01	United Coolair	Allowed
236500	Dry Closed-Circuit Cooler – CCC01	Guntner	Allowed
057300	Glazed Decorative Metal Railings	Q-railing	Allowed

Bowman Murray Hemingway Architects, PC

W. Daniel Hill AIA

F O R M O F P R O P O S A L

Learning Resources Center First Floor Renovation Contract: General

Coastal Carolina Community College Bidder: _____

SCO ID#: 23-26060-01A Date: _____

The undersigned, as bidder, hereby declares that the only person or persons interested in this proposal as principal or principals is or are named herein and that no other person than herein mentioned has any interest in this proposal or in the contract to be entered into; that this proposal is made without connection with any other person, company or parties making a bid or proposal; and that it is in all respects fair and in good faith without collusion or fraud. The bidder further declares that he has examined the site of the work and the contract documents relative thereto and has read all special provisions furnished prior to the opening of bids; that he has satisfied himself relative to the work to be performed. The bidder further declares that he and his subcontractors have fully complied with NCGS 64, Article 2 in regard to E-Verification as required by Section 2.(c) of Session Law 2013-418, codified as N.C. Gen. Stat. § 143-129(j).

The Bidder proposes and agrees if this proposal is accepted to contract with the

Coastal Carolina Community College

in the form of contract specified below, to furnish all necessary materials, equipment, machinery, tools, apparatus, means of transportation and labor necessary to complete the construction of

Learning Resources Center First Floor Renovation

in full in complete accordance with the plans, specifications and contract documents, to the full and entire satisfaction of Coastal Carolina Community College and Bowman Murray Hemingway Architects
with a definite understanding that no money will be allowed for extra work except as set forth in the General Conditions and the contract documents, for the sum of:

SINGLE PRIME CONTRACT: _____
TOTAL BASE BID:

_____Dollars($)_____

General Subcontractor: Plumbing Subcontractor:

_____Lic_____ _____Lic_____

Mechanical Subcontractor: Electrical Subcontractor:

_____Lic_____ _____Lic_____

GS143-128(d) requires all single prime bidders to identify their subcontractors for the above subdivisions of work. A contractor whose bid is accepted shall not substitute any person as subcontractor in the place of the subcontractor listed in the original bid, except (i) if the listed subcontractor's bid is later determined by the contractor to be non-responsible or non-responsive or the listed subcontractor refuses to enter into a contract for the complete performance of the bid work, or (ii) with the approval of the awarding authority for good cause shown by the contractor.

ALTERNATES:

Should any of the alternates as described in the contract documents be accepted, the amount written below shall be the amount to be "added to" or "deducted from" the base bid.

GENERAL CONTRACT:

Project Scope Alternates:

Alternate #1: State amount to be added to the base bid to provide all labor and material to provide Covered Canopy 140. Alternate to include all architectural, structural, plumbing, mechanical and electrical work involved in construction of Covered Canopy 140 as shown on A2.0 and A3.0. Base bid to include doors 134B and sidewalks as shown on A2.1. Base bid to include infiltration trenches as delineated on civil drawings.

(Add) _____ Dollars($) _____

Alternate #2: State the amount to be added to the base bid to provide labor and material for the complete installation of a standby power system including new natural gas fueled engine-generator set, automatic transfer switch and associated conductors, conduit and equipment as shown on electrical and plumbing drawings in the construction documents.

(Add) _____ Dollars($) _____

Alternate #3: State the amount to be added to the base bid to provide labor and material for precast terrazzo treads and risers and precast terrazzo tiles as delineated at the central stair on drawing sheet A5.0 and in specification section 096623 Resinous Matrix Terrazzo Flooring. Work to include removal of metal nosing at existing stair treads. Base bid shall include sheet carpeting at central stair as specified.

(Add) _____ Dollars($) _____

Owner Preferred Brand Alternates:

Alternate #4: State the amount to be added to the base bid to provide the basis of design door hardware as specified in section 087100:

Hinges and Butts:	McKinney: TB2714/TB2314/T4B3786/T4B3386
Continuous Hinges:	Ives: 224HD
Cylinders and Keying:	Corbin Russwin
Mortise Locks:	Corbin Russwin ML2000 x LWA
Cylindrical Locks:	Corbin Russwin CL3300 Series
Door Closers:	LCN 4040XP/4040XP
Exit Devices:	Von Duprin 99 Series

(Add) _____ Dollars($) _____

Alternate #5: State the amount to be added to the base bid to provide Sliding Automatic Entrances by Stanley Automatic Sliding Doors as specified in Section 084232.

(Add) _____ Dollars($) _____

Alternate #6: State the amount to be added to the base bid to provide fire alarm systems and devices by Notifier as specified in section 283111.

(Add) _____ Dollars($) _____

Alternate #7: State the amount to be added to the base bid to provide Schneider Electric DDC system as specified in section 230923 DIRECT DIGITAL CONTROL SYSTEM FOR HVAC, drawing M7.1, and drawing M7.2.

(Add) _____ Dollars($) _____

Alternate #8: State the amount to be added to the base bid to provide telecommunication structured cabling systems and devices by Amp Netconnect as specified in section 271500.

(Add) _____ Dollars($) _____

Alternate #9: State the amount to be added to the base bid to provide the basis of design plumbing fixtures as scheduled on drawing P0.2:

1. WC-1 ADA Water Closet: American Standard 3043.001.020, Sloan 111-1.28-DFB, Bemis Manufacturing Co. 1955SSCT.
2. WC-2 Water Closet: American Standard 2234.001.020, Sloan 113-1.28-DFB-Z, Bemis Manufacturing Co. 1955SSCT.
3. UR-1 Urinal: American Standard 6590001.020, Sloan 186-0.125-DBP, Zurn Z1221-UNIV.
4. LAV-1 ADA Lavatory: American Standard 0497.221.020, Moen 8894, Jones Stephens D70100.
5. SK-1 2-Compartment Sink: Elkay LR33223, Moen 8701, Elkay LK35.
6. FD-1 Floor Drain: Sioux Chief 832-4PNR.
7. HB-1 Hose Bibb: Woodford 24P.
8. OB-1 Ice Maker Box: Sioux Chief 696-G1010XF.

(Add) _____ Dollars($) _____

Alternate #10: State the amount to be added to the base bid to provide Trane EXHG Ground-coupled heat pumps as scheduled on drawing M6.1.

(Add) _____ Dollars($) _____

Alternate #11: State the amount to be added to the base bid to provide elevator modernization to the main elevator in the Learning Resources Center Building (TKE Serial # US155244) by **TKE** as specified in section 142400.5 Hydraulic Elevator Modernization.

(Add) _____ Dollars($) _____

UNIT PRICES

Unit prices quoted and accepted shall apply throughout the life of the contract, except as otherwise specifically noted. Unit prices shall be applied, as appropriate, to compute the total value of changes in the base bid quantity of the work all in accordance with the contract documents.

Unit Price 1: Removal of unsuitable soils per cubic yard and replacement with compacted sand. Contractor shall provide loading and hauling to site and disposal of unsuitable soils. $_____Per CY

Unit Price 2: Removal of unsuitable soils per cubic yard and replacement with No. 57 Stone. Contractor shall provide loading and hauling to site and disposal of unsuitable soils. $_____Per CY

Unit Price 3: Removal of unsuitable soils per cubic yard and replacement with ABC stone. Contractor shall provide loading and hauling to site and disposal of unsuitable soils. $_____Per CY

MINORITY BUSINESS PARTICIPATION REQUIREMENTS

Provide with the bid - Under GS 143-128.2(c) the undersigned bidder shall identify **on its bid** (Identification of Minority Business Participation Form) the minority businesses that it will use on the project with the total dollar value of the bids that will be performed by the minority businesses. **Also** list the good faith efforts (Affidavit **A**) made to solicit minority participation in the bid effort.

NOTE: A contractor that performs all of the work with its own workforce may submit an Affidavit (**B**) to that effect in lieu of Affidavit (**A**) required above. The MB Participation Form must still be submitted even if there is zero participation.

After the bid opening - The Owner will consider all bids and alternates and determine the lowest responsible, responsive bidder. Upon notification of being the apparent low bidder, the bidder shall then file within 72 hours of the notification of being the apparent lowest bidder, the following:

An Affidavit (**C**) that includes a description of the portion of work to be executed by minority businesses, expressed as a percentage of the total contract price, which is equal to or more than the 10% goal established. This affidavit shall give rise to the presumption that the bidder has made the required good faith effort and Affidavit **D** is not necessary;

*** OR ***

If less than the 10% goal, Affidavit (**D**) of its good faith effort to meet the goal shall be provided. The document must include evidence of all good faith efforts that were implemented, including any advertisements, solicitations and other specific actions demonstrating recruitment and selection of minority businesses for participation in the contract.

Note: Bidders must always submit **with their bid** the Identification of Minority Business Participation Form listing all MB contractors, vendors and suppliers that will be used. If there is no MB participation, then enter none or zero on the form. Affidavit A **or** Affidavit B, as applicable, also must be submitted with the bid. Failure to file a required affidavit or documentation with the bid or after being notified apparent low bidder is grounds for rejection of the bid.

Proposal Signature Page

The undersigned further agrees that in the case of failure on his part to execute the said contract and the bonds within ten (10) consecutive calendar days after being given written notice of the award of contract, the certified check, cash or bid bond accompanying this bid shall be paid into the funds of the owner's account set aside for the project, as liquidated damages for such failure; otherwise the certified check, cash or bid bond accompanying this proposal shall be returned to the undersigned.

Respectfully submitted this day of _____

_____
(Name of firm or corporation making bid)

WITNESS:

_____
(Proprietorship or Partnership)

By:_____
Signature

Name: _____
Print or type

Title_____
(Owner/Partner/Pres./V.Pres)

Address_____

_____

License No._____

Federal I.D. No. _____

Email Address: _____

ATTEST:

By:_____

Title:_____
(Corp. Sec. or Asst. Sec. only)

(CORPORATE SEAL)

Addendum received and used in computing bid:

Addendum No. 1 _____ Addendum No. 3 _____ Addendum No. 5_____ Addendum No. 6_____

Addendum No. 2 _____ Addendum No. 4 _____ Addendum No. 6 _____ Addendum No. 7 _____

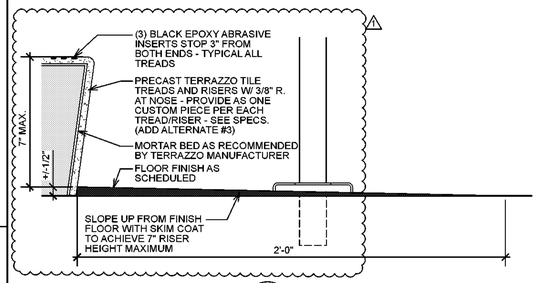

8 A5.0 Stair Detail
Scale: 3" = 1'-0"

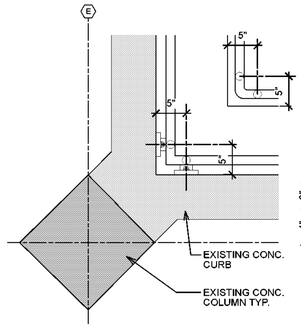

7 A5.0 Plan Detail @ Stair
Scale: 1" = 1'-0"

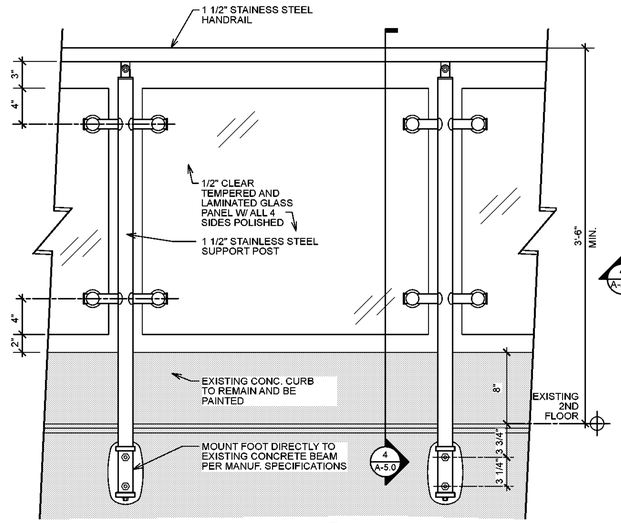

5 A5.0 Elevation @ Guardrail
Scale: 1 1/2" = 1'-0"

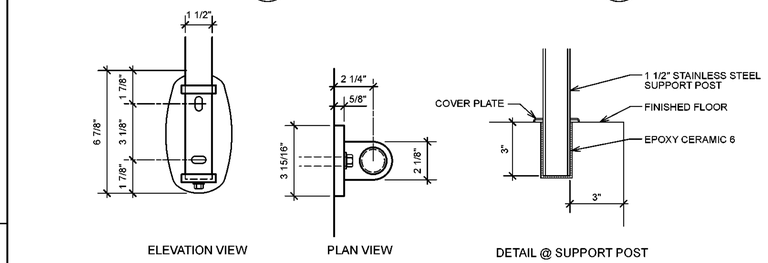

6 A5.0 Surface Mount Footing Details
Scale: 3" = 1'-0"

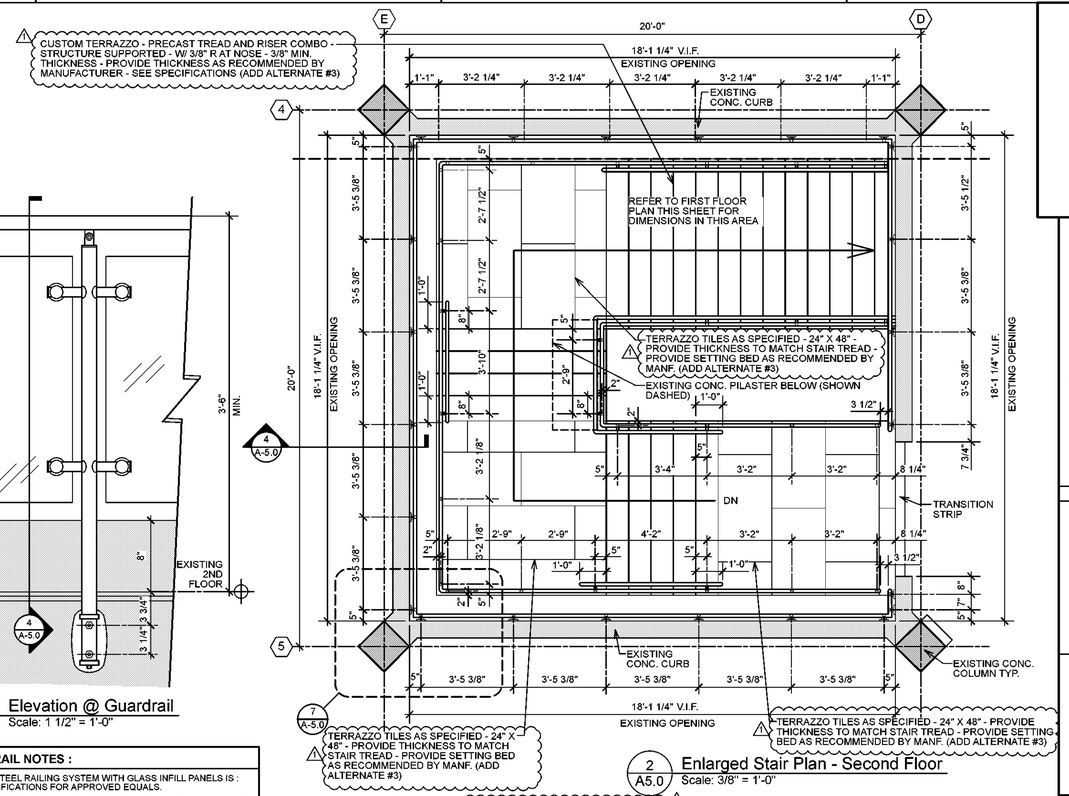

2 A5.0 Enlarged Stair Plan - Second Floor
Scale: 3/8" = 1'-0"

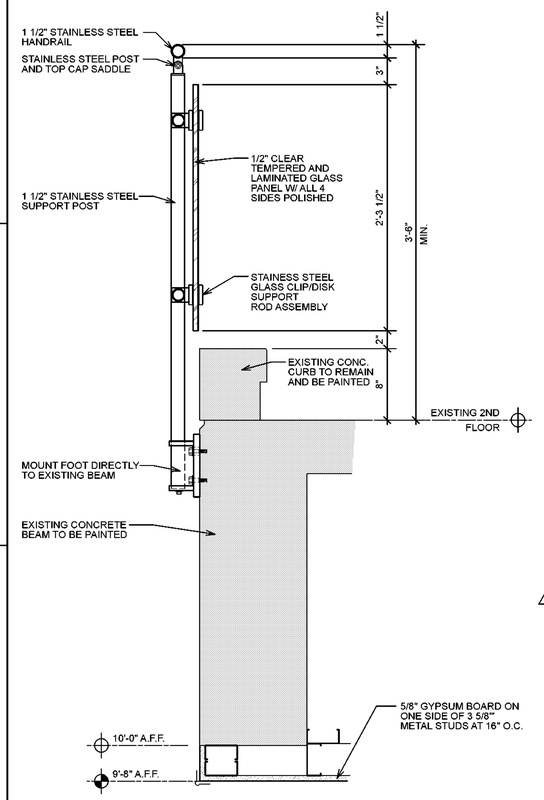

4 A5.0 Section at Gaurd Rail
Scale: 1 1/2" = 1'-0"

NEW HANDRAIL AND GUARDRAIL NOTES :

1. BASIS OF DESIGN FOR STAINLESS STEEL RAILING SYSTEM WITH GLASS INFILL PANELS IS : ARTEC MODESTO - REFER TO SPECIFICATIONS FOR APPROVED EQUALS.
2. ALL RAILING AND GUARD COMPONENTS TO BE MANUFACTURED AND PROVIDED BY SINGLE SOURCE.
3. ALL VOIDS CREATED BY DEMOLITION OF EXISTING RAILING SHALL BE FILLED AND GROUND SMOOTH. REFER TO STRUCTURAL FOR DESIGN MIX.
4. FINAL LAYOUT OF ALL SUPPORT POSTS SHALL BE REVIEWED IN FIELD WITH OWNER PRIOR TO INSTALLATION.

ADD ALTERNATE #3 NOTE :

ALL WORK TO PROVIDE LABOR AND MATERIAL FOR PRECAST TERRAZZO TREADS AND RISERS AND PRECAST TERRAZZO TILES AS DELINEATED AT THE CENTRAL STAIR ON DRAWING SHEET A5.0 AND IN SPECIFIC SECTION 096623 RESINOUS MATRIX TERRAZZO FLOORING. WORK TO INCLUDE REMOVAL OF METAL NOSING AT EXISTING STAIR TREADS. BASE BID SHALL INCLUDE SHEET CARPETING AT CENTRAL STAIR AS SPECIFIED.

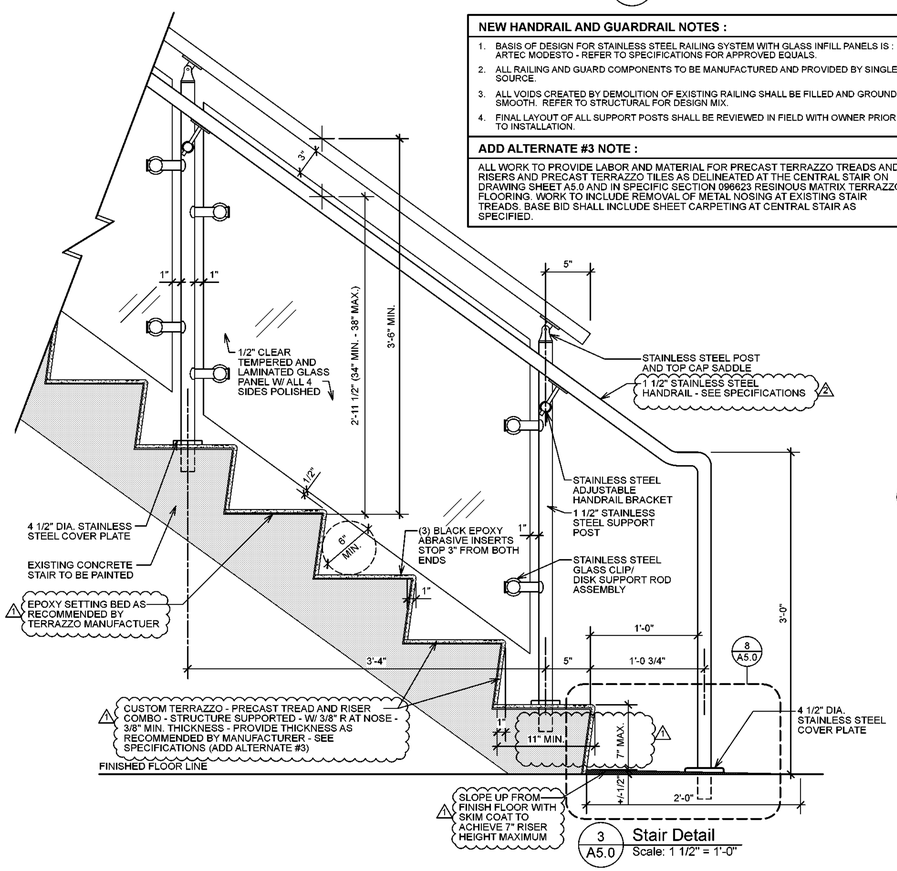

3 A5.0 Stair Detail
Scale: 1 1/2" = 1'-0"

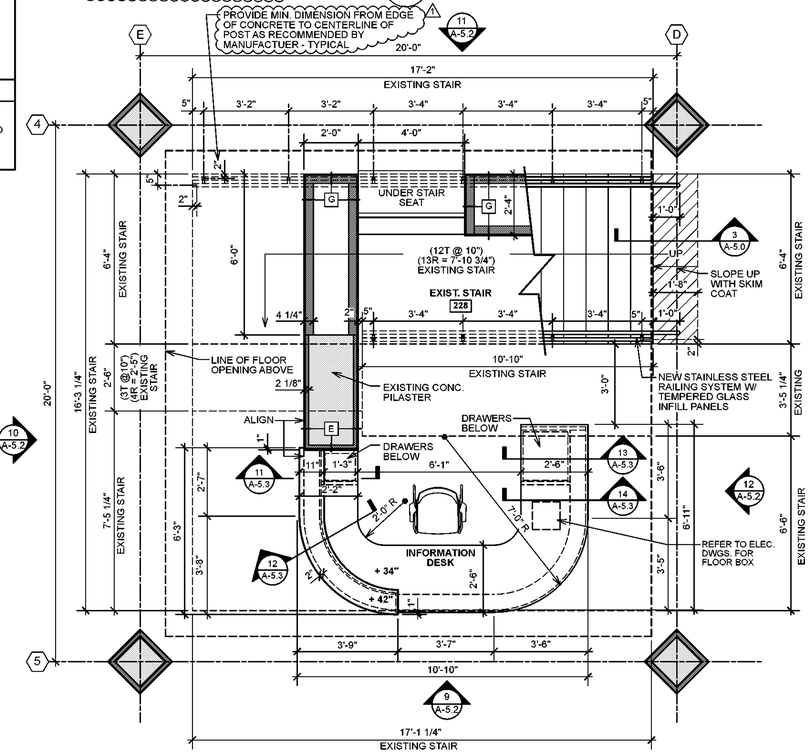

1 A5.0 Enlarged Stair Plan - First Floor
Scale: 3/8" = 1'-0"

BOWMAN MURRAY HEMINGWAY ARCHITECTS

514 Market Street
Wilmington, NC 28401
Tel - (910) 762-2621

SCO ID# 23-26060-01A

BOWMAN MURRAY HEMINGWAY ARCHITECTURAL CORPORATION CERT. NO. 50424 NORTH CAROLINA WILMINGTON, N.C.

WILLIAM DANIEL HILL 13058 NORTH CAROLINA PROFESSIONAL ENGINEER WILMINGTON, NC
1-16-2025

Coastal Carolina Community College Learning Resources Center - First Floor Renovation

444 Western Boulevard, Jacksonville, North Carolina 28546

REV	DATE	DESCRIPTION
1	1.9.25	ADDENDUM #3: Alternate #3 Precast Terrazzo Clarification
2	1.16.25	ADDENDUM #4: Stainless Steel Handrail Clarification

Project Manager	Drawn By DP
Date 11-25-2024	Reviewed By DH
Project ID	

Sheet Title
ENLARGED STAIR PLAN & DETAILS

Sheet No.
A5.0
Addendum #4, Attachment #3

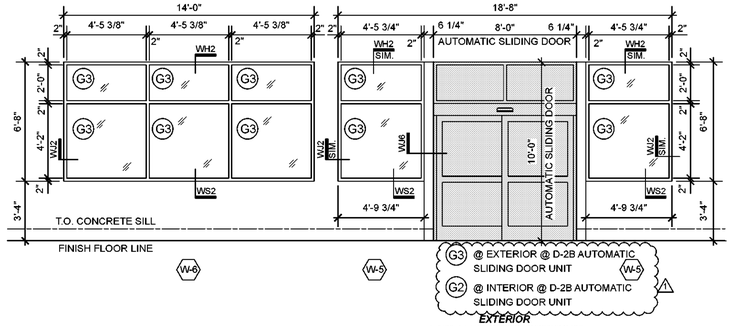

SYMBOLS

- G1 — 1/4" TEMPERED GLAZING - CLEAR
- G2 — 1" TEMPERED INSULATED GLAZING - CLEAR
- G3 — 1" TEMPERED INSULATED GLAZING (EXTERIOR)

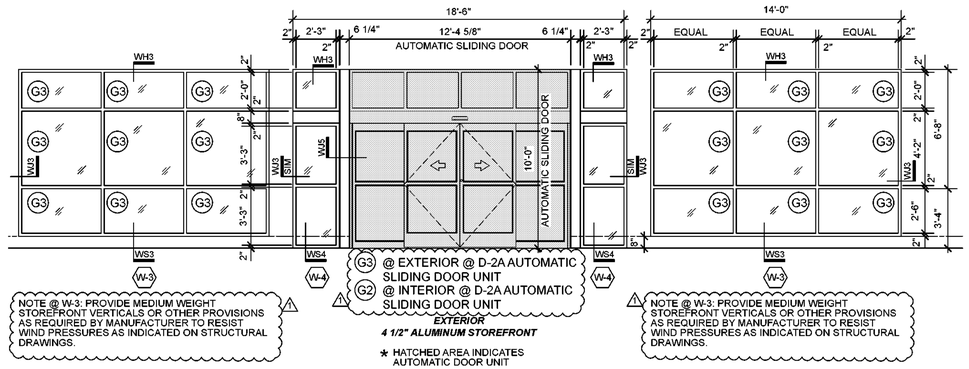

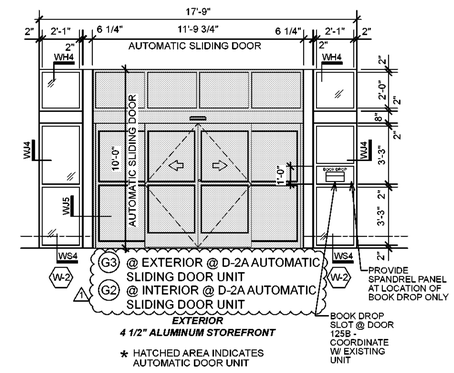

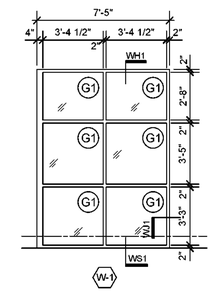

3 / A6.0 Window Elevations
Scale: 1/4" = 1'-0"

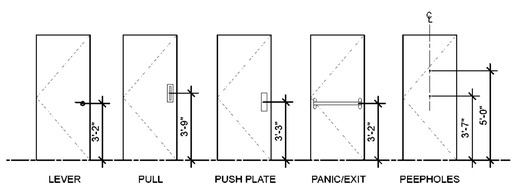

3 / A6.1 Door Hardware Mounting Heights
Scale: 1/4" = 1'-0"

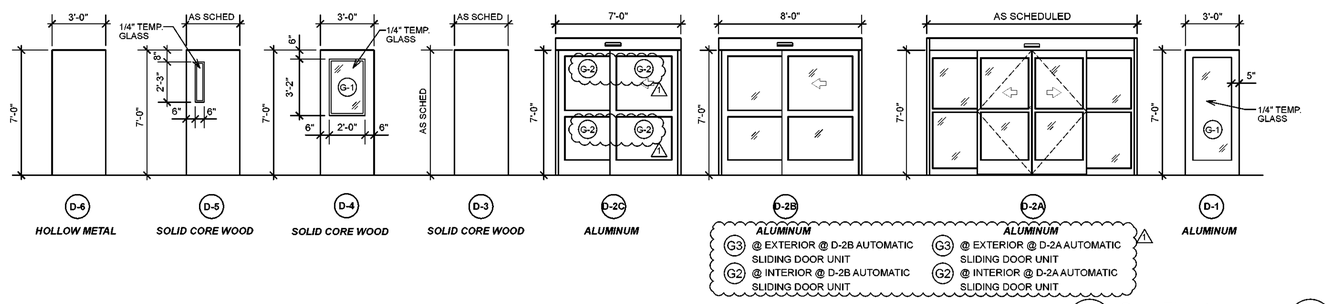

2 / A6.1 Door Elevations
Scale: 1/4" = 1'-0"

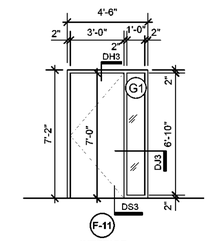

1 / A6.1 Frame Elevations (Cont.)
Scale: 1/4" = 1'-0"

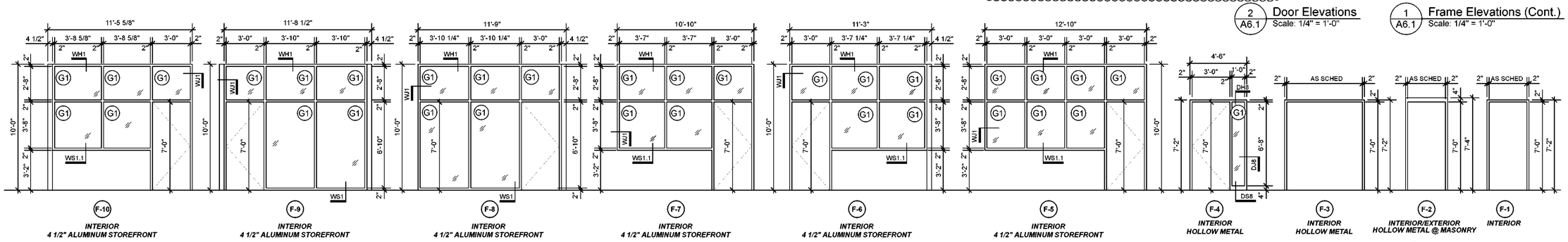

1 / A6.1 Frame Elevations
Scale: 1/4" = 1'-0"

BOWMAN MURRAY HEMINGWAY
ARCHITECTS
514 Market Street
Wilmington, NC 28401
Tel - (910) 762-2621

SCO ID# 23-26060-01A

BOWMAN, MURRAY, HEMINGWAY ARCHITECTS, PC — REGISTERED ARCHITECTURAL CORPORATION — CERT. NO. 50424 — NORTH CAROLINA — WILMINGTON, N.C.

WILLIAM DANIEL HILL — REGISTERED ARCHITECT — 13058 — NORTH CAROLINA — WILMINGTON, N.C. — 1-16-2025

Coastal Carolina Community College
Learning Resources Center - First Floor Renovation
444 Western Boulevard, Jacksonville, North Carolina 28546

REV.	DATE	DESCRIPTION
1	1.16.25	ADDENDUM #4: Storefront and Glazing Clarification

Project Manager	Drawn By: DP
Date: 11-25-2024	Reviewed By: DH
Project ID	

Sheet Title: **DOOR AND WINDOW FRAME ELEVATIONS**

Sheet No. **A6.1**

Addendum #4, Attachment #4

SECTION 075400 - THERMOPLASTIC SINGLE-PLY ROOFING

PART 1 GENERAL

1.01 WORK INCLUDED

A. Install a fully adhered, thermoplastic membrane and cover board over mechanically fastened rigid insulation and flashings to provide a permanently watertight system.

1.02 RELATED DOCUMENTS

A. Drawings and general provisions of the Contract, including General and Supplementary Conditions and Specification Sections, apply to this Section, including but not limited to:

1. Sheet Metal Flashing and Trim - Section 076200.

1.03 REFERENCES

A. Refer to the following references, current edition for specification compliance:

1. NC State Building Code.
2. ASTM International.
3. National Roofing Contractors Association (NRCA).
4. Underwriters Laboratory (UL).
5. FM Global.
6. Single Ply Roofing Institute.

1.04 SUBMITTALS

A. Refer to Section 013300 - Submittal Procedures for Submittals.

B. Latest edition of the Manufacturer's current material specifications and installation instructions.

C. Manufacturer's Product Data Sheets for all materials specified certifying material complies with all specified requirements.

D. Submit documentation of approved, tested roof system to meet the specified requirements for the following:

1. Wind Loads: Reference sheet S1.01 for structural loading requirements. Roof shall meet, ASCE 7-10.
2. UL Fire Resistance Rating.
3. Shop drawing of roof plan showing fastening requirements for each roof sector and each roof zone.
   a. Include structural analysis data signed and sealed by a qualified structural engineer registered in the state of North Carolina responsible for their preparation. Analysis shall include sealed ASCE 7-10 calculations.

1.05 DELIVERY, STORAGE AND HANDLING

A. All products delivered to the job site shall be in the original unopened containers or wrappings bearing all seals and approvals.

B. Handle all materials to prevent damage. Place all materials on pallets and fully protect from moisture.

C. Membrane rolls shall be stored lying down on pallets and fully protected from the weather with clean canvas tarpaulins. Unvented polyethylene tarpaulins are not accepted due to the accumulation of moisture beneath the tarpaulin in certain weather conditions that may affect the ease of membrane weldability.

D. All adhesives shall be stored at temperatures approved for the product.

E. All flammable materials shall be stored in a cool, dry area away from sparks and open flames. Follow precautions outlined on containers or supplied by material manufacturer/ supplier.

F. All materials which are determined to be damaged by the Engineer or membrane manufacturer are to be removed from the job site and replaced at no cost to the Owner.

1.06 PROJECT CONDITIONS

A. Roofing shall not be applied during precipitation. Contractor assumes all responsibility for starting installation in the event there is a probability of precipitation occurring during application.

B. Only as much of the new roofing as can be made weathertight each day, including all flashing and detail work, shall be installed. All seams shall be cleaned and heat welded before leaving the job site that day.

C. All work shall be scheduled and executed without exposing the interior building areas to the effects of inclement weather. The existing building and its contents shall be protected against all risks.

D. All surfaces to receive new insulation, membrane or flashings shall be dry. Should surface moisture occur, the Applicator shall provide the necessary equipment to dry the surface prior to application.

E. All new and temporary construction, including equipment and accessories, shall be secured in such a manner as to preclude wind blow-off and subsequent roof or equipment damage.

F. Uninterrupted waterstops shall be installed at the end of each day's work and shall be completely removed before proceeding with the next day's work. Waterstops shall not emit dangerous or unsafe fumes and shall not remain in contact with the finished roof as the installation progresses. Contaminated membrane shall be replaced at no cost to the Owner.

G. Arrange work sequence to avoid use of newly constructed roofing as a walking surface or for equipment movement and storage. Where such access is absolutely required, the Applicator shall provide all necessary protection and barriers to segregate the work area and to prevent damage to adjacent areas. A protection layer of plywood over insulation board shall be provided for all new and existing roof areas that receive rooftop traffic during construction.

H. Prior to and during application, all dirt, debris and dust shall be removed from surfaces, either by vacuuming, sweeping, blowing with compressed air and/or similar methods.

I. Contaminants, such as grease, fats, oils, and solvents, shall not be allowed to come into contact with the roofing membrane. All rooftop contamination that is anticipated or that is occurring shall be reported to the Engineer and membrane manufacturer to determine the corrective steps to be taken.

J. If any unusual or concealed condition is discovered, the contractor shall stop work, notify Owner of such condition immediately, and in writing within 24 hours.

K. The roofing membrane shall not be installed under the following conditions without consulting the membrane manufacturer's technical department for precautionary steps:

1. The roof assembly permits interior air to pressurize the membrane underside.
2. Any exterior wall has 10% or more of the surface area comprised of opening doors or windows.
3. The wall/deck intersection permits air entry into the wall flashing area.

L. Precautions shall be taken when using membrane adhesives at or near rooftop vents or air intakes. Adhesive odors could enter the building. Coordinate the operation of vents and air intakes in such a manner as to avoid the intake of adhesive odor while ventilating the building. Keep lids on unused cans at all times.

1.07 QUALITY ASSURANCE

A. Manufacturer Requirements:

1. Manufacturer must have written contractor/installer approval program.
2. Products manufactured by other manufacturers and private labeled are not acceptable.
3. See materials section for general product description and specified requirements.

B. Contractor Requirements:

1. This roofing system shall be applied only by a Contractor authorized by the membrane manufacturer prior to bid.
2. Application of the roofing system shall be accomplished by a primary roofing contractor, his roofing foreman, and sufficient applicator technicians who all have been trained and approved by the manufacturer of the single ply roofing system. Contractor to submit evidence of qualification from the manufacturer.

C. Upon completion of the installation an inspection shall be made by a representative of the membrane manufacturer to review the installed roof system and list all deficiencies.

D. There shall be no deviation made from the Contract Documents or the approved shop drawings without prior written approval by the Engineer.

E. All work shall be completed by personnel trained and authorized by the membrane manufacturer.

F. Contractor to provide manufacturer written verification indicating all seams have been

probed and are watertight.

G. Install roofing system to meet UL 790 Class A Fire Rating.

H. Wind Design:

1. Install roofing system to meet or exceed the requirements of ASCE-7 (Version 10), and shall be an approved assembly tested to the wind uplift pressures listed below:

a. Wind Loads: Reference sheet S1.01 for structural loading requirements. Roof shall meet Section 6, ASCE 7-10.

1.08 WARRANTIES

A. Manufacturer's Guarantee: Manufacturer's standard form, non-pro-rated, without monetary limitation or deductibles, in which manufacturer agrees to repair or replace components of roofing system that fail in materials or workmanship within specified warranty period. Failure includes roof leaks or breaches in the primary roof membrane causing moisture to enter the substrate below (even if visible leaks are not observed inside the facility). Warranty to remain in effect for wind speeds up to 73 mph. Warranties requiring the Owner's signature will not be acceptable.

1. Warranty to include but not be limited to membrane, insulation, adhesives, fasteners, sealants, flashings, polymer clad sheet metal, etc.
2. Warranty Period: Twenty years from date of Final Acceptance.
3. Manufacturer's Representative shall attend two post construction field inspections: the first no earlier than twenty -three (23) months and no later than twenty-four (24) months after the date of Final Acceptance and the second no earlier than fifty-nine (59) months and no later than sixty (60) months. Submit a written report within seven (7) days of the site visits to the Engineer listing observations, conditions and any recommended repairs or remedial action.

PART 2 PRODUCTS

2.01 MANUFACTURER

A. Membrane materials shall be manufactured by the following:

1. Basis of Design: Carlisle Syntec, "White".
2. Sika Sarnafil.
3. Fibertite.

2.02 MEMBRANE MATERIALS

1. Basis of Design: Carlisle Sure Flex 60 mil FB
2. Fibertite 45 mil FB
3. Sarnafil 60 mil G410
4. Membrane Adhesive: Shall be membrane manufacturer's solvent or water based reactivating-type adhesive. Water based adhesive shall not be utilized in temperatures below 40 degrees F.

2.03 ROOF INSULATION

A. Polyisocyanurate Board Insulation: ASTM C 1289, type II, felt or glass-fiber mat facer on both major surfaces. Average thickness of rigid roof insulation shall be at least 3 inches (refer to drawings). Minimum thickness of rigid roof insulation shall be at least 2 inches.

B. Tapered Insulation: Provide factory-tapered insulation boards fabricated to slope of 1/4 inch per 12 inches unless otherwise indicated.

C. Provide preformed saddles, crickets, tapered edge strips, and other insulation shapes where indicated for sloping to drain. Fabricate to slopes indicated.

D. Adhered Gypsum Cover Board: Shall be cover board approved by roof system manufacturer. Board Size shall be 4' by 8' and minimum thickness shall be as listed below or as required by roof system manufacturer. Refer to details for board thickness. Acceptable products include:

1. Georgia Pacific DensDeck Prime Roof Board
2. USG Securock Glass-Mat Roof Board
3. DEXcell Glass Mat Roof Board

2.04 INSULATION ACCESSORIES

A. Fasteners: Factory-coated steel fasteners and metal or plastic plates meeting corrosion-resistance provisions in FMG 4470, designed for fastening roof insulation to substrate, and acceptable to roofing system manufacturer.

B. Cover Board Foam Adhesive: Shall be a one or two part, VOC compliant, moisture-cured polyurethane foamable adhesive designed as roof insulation adhesive and approved by insulation manufacturer.

2.05 RELATED MATERIALS

A. Flashing/Stripping Membrane: Shall be a non fleeceback, thermoplastic membrane reinforced with fiberglass. Utilize asphalt resistant flashing membrane where in contact with residual asphaltic materials or as required by the manufacturer.

1. Basis of Design: Carlisle Sure-Flex 60 mil Membrane.
2. Sika Sarnafil 60 mil G410.
3. Fibertite 45 mil SM.

B. Flashing Adhesive: Shall be membrane manufacturer's solvent based reactivating-type adhesive.

C. T-joint Patch: Shall be membrane manufacturer's circular patch welded over T-joints formed by overlapping thick membranes.

D. Corner Flashing: Shall be membrane manufacturer's pre-formed inside and outside flashing corners that are heat-welded to membrane or polymer clad metal base flashings.

E. Pipe Flashing: Shall be membrane manufacturer's pre-formed pipe boot flashing that is heat-welded to membrane and secured with a stainless-steel draw band and sealant.

F. Termination Bar: Shall be manufacturer's 1/8" by 1" mill finish extruded aluminum bar

with pre-punched slotted holes.

G. Counterflashing Bar: Shall be a prefabricated extruded aluminum metal counterflashing and termination bar. 0.10”-0.12” thick bar with 2-1/4” profile, pre-drilled holes 8” on center and sealant kick out at top edge.

H. Sealant: Shall be manufacturer’s multi-purpose sealant.

I. Fasteners:

1. Flashing Membrane Termination Screws: #12 stainless steel hex or pan head screws with length to penetrate substrate a minimum of 1-1/2”.
2. Concrete and Masonry Flashing Membrane Termination Anchors:

   a. 1/4” diameter metal-based expansion anchor with stainless steel pin of length to penetrate substrate a minimum of 1-1/2”.
   b. Masonry screws, approved my membrane manufacturer, 1/4 inch minimum diameter, corrosion resistant, with Phillips flat head. Length to provide minimum 1-1/2” embedment into substrate.

3. Steel Deck Fasteners and Plates: Shall be #12 hot dipped galvanized steel pan head screw approved by membrane manufacturer of length to penetrate top flange of steel deck a minimum of 1” with galvalume plates approved for membrane attachment.
4. Cementitious Wood Fiber Deck Fasteners and Plates: Shall be specially designed fiberglass filled nylon fastener with 1” diameter head approved by membrane manufacturer for cementitious wood fiber applications, corrosion resistant and of length to penetrate deck a minimum of 1-1/2” and at least ½” from penetrating through wood fiber with 2” round plate approved for membrane attachment.

J. Primary Membrane Cleaner: Shall be a high-quality solvent cleaner provided by membrane manufacturer and approved by engineer for use as a general membrane cleaner.

K. Pre-weld Cleaner: Shall be a high-quality solvent-based seam cleaner with moderate evaporation rate provided by membrane manufacturer.

L. Walkway Pad: Shall be walkway pad by manufacturer of membrane.

M. Retrofit Roof Drain: Shall be a prefabricated aluminum drain insert composed of 11 gauge spun aluminum drain body, PVC coated 17.5" diameter flange, cast aluminum clamping ring, cast aluminum strainer, watertight U-Flow seal and stem length and diameter as required by field conditions. Drain shall be approved by roof system manufacturer. Contractor shall field verify drain diameter and required stem length prior to ordering drains.

N. Pre-Fabricated Expansion Joint: Shall be manufacturer’s approved pre-fabricated expansion joint made with polyester reinforced membrane, neoprene foam and galvanized metal.

O. Polymer Clad Metal: Refer to Section 076200 - Sheet Metal Flashing and Trim.

PART 3 EXECUTION

3.01 SUBSTRATE PREPARATION

A. Verify that the substrate is dry, clean, smooth, and free of loose material, oil, grease, or other foreign matter. Sharp ridges and other projections and accumulations of bitumen shall be removed to ensure a smooth surface before roofing.

B. Asphalt roofing substrates shall be removed, covered, or flashed using compatible, approved materials. PVC shall not come in contact with substrates containing asphalt materials.

C. Any deteriorated substrate shall be repaired.

D. Beginning installation means acceptance of prepared substrate.

E. Provide necessary protection from adhesive vapors to prevent interaction with foamed plastic insulation.

3.02 INSULATION INSTALLATION

A. Coordinate installing membrane roofing system components so insulation is not exposed to precipitation or left exposed at the end of the workday.
B. Comply with membrane roofing system manufacturer's written instructions for installing roof insulation.
C. Install tapered insulation under area of roofing to conform to slopes indicated.
D. Install one or more layers of insulation under area of roofing to achieve required thickness. Where overall insulation thickness is 2 inches or greater, install 2 or more layers with joints of each succeeding layer staggered from joints of previous layer a minimum of 6 inches in each direction.
E. Insulation Mechanical Attachment:

1. Fastener quantity and spacing shall be as required to resist uplift pressures as indicated in the Contract Drawings.
2. Fasteners shall be installed using manufacturer’s recommended equipment and in accordance with the manufacturer’s requirements.
3. Fasteners and stress plates shall be set secure and tight against the insulation surface, and shall not be over-driven.
4. Fasteners shall engage the top flange of steel decks only.

F. Foam Adhesive Application: all flat insulation layers shall be mechanically attached, tapered insulation layers may be mechanically fastened or adhered at contractor’s option.

1. Adhesive beads shall be positioned and spaced at a minimum as required to resist uplift pressures as indicated in the Contract Drawings. Comply with the requirements of the membrane manufacturer’s tested assembly for adhesive spacing and positioning.
2. Adhesive beads shall be sized in accordance with the adhesive manufacturer’s guidelines.
3. Insulation boards shall be placed onto the beads and immediately “walked” and/or “weighted” into place. Insulation boards must be placed into the adhesive in strict accordance with the adhesive manufacturer’s guidelines.
4. Ensure full adhesion of all layers of insulation and take whatever steps necessary to achieve full adhesion, including but not limited to temporary ballasting of insulation

until adhesive sets.

3.03 MEMBRANE INSTALLATION

A. The surface of the insulation or substrate shall be inspected prior to installation of the roof membrane. The substrate shall be clean, dry, free from debris and smooth with no surface roughness or contamination. Broken, delaminated, wet or damaged insulation boards shall be removed and replaced.

B. Over the properly installed and prepared substrate, membrane adhesive shall be spread in accordance with the manufacturer's instructions and application rates utilizing equipment as required by the manufacturer.

1. Do not allow adhesive to skin-over or surface-dry prior to installation of roof membrane.
2. Water based membrane adhesive shall not be used if temperatures below 40º F (5º C) are expected during application or subsequent drying time.
3. Adhesive application rates shall comply with the manufacturer's published requirements.
4. The Applicator shall count the amount of pails of adhesive used per area per day to verify conformance to the specified adhesive rate.
5. No adhesive shall be applied in seam areas. All membrane shall be applied in the same manner.
6. Notched squeegees shall be replaced each day or as notches are reduced below ¼".

C. The roof membrane shall be unrolled into the adhesive. Adjacent rolls overlap previous rolls by 3 inches (75 mm). This process is repeated throughout the roof area. Immediately after placement of membrane, each roll shall be pressed firmly into place with the manufacturer's recommended roller by frequent rolling in two directions.

D. Weld membrane coverstrips at all fleeceback membrane seams without a factory selvage edge.

3.04 MEMBRANE TERMINATION

A. Terminate membrane at all walls as shown in the contract drawings.

1. Roof Deck: Membrane shall be mechanically terminated using approved fasteners and plates six (6) inches on center.
2. Wood Wall Substrate: Membrane shall be turned up wall one inch and mechanically terminated using approved screws eight (8) inches on center with a termination bar.
3. Concrete/Masonry Wall Substrate: Membrane shall be turned up wall one inch and mechanically terminated using approved anchors eight (8) inches on center with a termination bar.

B. Terminate membrane at all penetrations as shown in the contract drawings.

1. Membrane shall be fastened six inches on center or a minimum of four (4) fasteners per penetration into the structural deck using fasteners and plates as approved by the membrane manufacturer for the deck substrate.

C. Membrane shall extend over roof edge a minimum of 2" below the perimeter wood blocking.

3.05 FLASHING INSTALLATION

A. General:

1. All flashings shall be installed concurrently with the roof membrane as the job progresses.
2. No temporary flashings shall be allowed without the prior written approval of the Engineer and Manufacturer. Approval shall only be for specific locations on specific dates. If any water is allowed to enter under the newly completed roofing, the affected area shall be removed and replaced at the Contractor's expense.
3. Seams shall not be “taped” as temporary measure but shall be fully completed before the end of each day.
4. Flashing shall be adhered to compatible, dry, smooth, and solvent-resistant surfaces.
5. Where substrates are incompatible with adhesives and PVC materials, the Contractor shall remove the incompatible materials and replace it with a compatible substrate or install compatible PVC flashing materials.
6. Use caution to ensure adhesive fumes are not drawn into the building.

B. Adhesive for Flashing Membrane:

1. Over the properly installed and prepared flashing substrate, flashing adhesive shall be applied according to instructions found on the Product Data Sheet. The membrane adhesive shall be applied in smooth, even coats with no gaps, globs or similar inconsistencies.
2. Only an area which can be completely covered in the same day's operations shall be flashed. The bonded sheet shall be pressed firmly in place with a hand roller.
3. No adhesive shall be applied in seam areas that are to be welded.

C. All flashings shall mechanically terminated a minimum of 8 inches above the finished roofing surface using approved fasteners and counterflashing bar unless otherwise indicated in the Contract Drawings. Flashing heights less than 8” shall be accepted in writing by the Manufacturer’s Technical Department.

D. All flashing membranes shall be consistently adhered to substrates. All interior and exterior corners and miters shall be cut and hot-air welded into place. No bitumen shall be in contact with the (roof) membrane.

E. All flashings shall be hot-air welded at their joints and at their connections with the (roof) membrane.

F. All flashings that exceed 30 inches (0.75 m) in height shall receive additional securement. Consult Manufacturer’s Technical Department for securement methods.

G. Corners shall be flashed using the membrane manufacturer’s pre-formed corners.

H. Polymer Clad sheet metal incorporated into the roofing system shall be sealed off with a heat welded stripping ply. The stripping ply shall extend four inches beyond sheet metal onto roof membrane and fit closely to edge of sheet metal.

I. Roof Drain:

1. Mechanically attach membrane 6” on center into structural deck around drain sump. Fully adhere flashing membrane and hot-air weld to membrane a minimum of 4 inches.
2. Flashing membrane shall be set in a full bed of sealant under the clamping ring.
3. Provide new cast iron strainer dome and clamping ring and provide new stainless steel clamping ring bolts.
4. Clamping rings shall be secured in place with all bolts at the end of each work day. Contractor shall water test roof drains after every instance the clamping ring is removed and reinstalled. The Contractor shall notify the Engineer and Owner of the water test schedule.

J. Retrofit Roof Drain:

1. Mechanically attach membrane 6” on center into structural deck around drain sump. Fully adhere flashing membrane and hot-air weld to membrane a minimum of 2 inches.
2. Flashing membrane shall be set in a full bed of sealant under the clamping ring.
3. Install retrofit roof drain according to manufacturer’s installation instructions and provide stripping membrane hot-air welded to flange of retrofit roof drain extending onto flashing membrane.
4. Clamping rings shall be secured in place with all bolts at the end of each work day. Contractor shall water test roof drains after every instance the clamping ring is removed and reinstalled. The Contractor shall notify the Owner of the water test schedule.

K. Soil Pipe/Pipe Penetration:

1. Provide field wrapped pipe penetration flashing or manufacturer’s pre-fabricated pipe boot as shown in detail drawing.
2. Apply aluminum tape to penetration if asphalt contamination is present.
3. Extend existing pipe to obtain a minimum 8" finished flashing height.
4. Cut existing pipe to obtain a maximum 12" finished flashing height.
5. Horizontal flashing membrane shall be hot-air welded a minimum of four inches onto the membrane.
6. Vertical flashing membrane shall be fully adhered to pipe penetration and extend a minimum of 1.5” horizontal at the base of penetration. Hot-air weld vertical flashing membrane to horizontal flashing membrane.
7. Install stainless steel draw band and sealant or hot-air weld flashing cap to terminate top edge of pipe flashing.

3.06 HOT-AIR WELDING OF SEAM OVERLAPS

A. General:

1. All seams shall be hot-air welded. Seam overlaps should be 3 inches (75 mm) wide when automatic machine-welding and 4 inches (100 mm) wide when hand-welding, except for certain details.

2. Welding equipment shall be provided by or approved by the membrane manufacturer. All mechanics intending to use the equipment shall have successfully completed a training course provided by a membrane manufacturer's technical representative prior to welding.
3. All membrane to be welded shall be clean and dry.

B. Hand-Welding:

1. Hand-welded seams shall be completed in two stages. Hot-air welding equipment shall be allowed to warm up for at least one minute prior to welding.
2. The back edge of the seam shall be welded with a narrow but continuous weld to prevent loss of hot air during the final welding.
3. The nozzle shall be inserted into the seam at a 45-degree angle to the edge of the membrane. Once the proper welding temperature has been reached and the membrane begins to "flow," the hand roller is positioned perpendicular to the nozzle and pressed lightly. For straight seams, the 1½ inch (40 mm) wide nozzle is recommended for use. For corners and compound connections, the ¾ inch (20 mm) wide nozzle shall be used.

C. Machine Welding:

1. Machine welded seams are achieved by the use of automatic welding equipment. When using this equipment, instructions from the manufacturer shall be followed and local codes for electric supply, grounding and over current protection observed. Dedicated circuit house power or a dedicated portable generator is recommended. No other equipment shall be operated off the generator.
2. Metal tracks may be used over the deck membrane and under the machine welder to minimize or eliminate wrinkles.

D. Quality Control of Welded Seams:

1. The Applicator shall check all welded seams for continuity using a rounded screwdriver. Visible evidence that welding is proceeding correctly is smoke during the welding operation, shiny membrane surfaces, and an uninterrupted flow of dark grey material from the underside of the top membrane. On-site evaluation of welded seams shall be made daily by the Applicator to locations as directed by the Engineer or membrane manufacturer's representative. One-inch (25 mm) wide cross-section samples of welded seams shall be taken at least three times a day. Correct welds display failure from shearing of the membrane prior to separation of the weld. Each test cut shall be patched by the Applicator at no extra cost to the Owner.

3.07 WALKWAY PAD INSTALLATION

A. Roofing membrane to receive walkway pad shall be clean and dry.

B. Place chalk lines on sheet to indicate location of Walkway.

C. Apply a continuous coat of membrane adhesive to the sheet and the back of walkway pad in accordance with membrane manufacturer's technical requirements and press walkway pad into place with a water-filled, foam-covered lawn roller.

D. Clean the membrane in areas to be welded. Hot-air weld the entire perimeter of the walkway to the roofing membrane.

E. Check all welds with a rounded screwdriver. Re-weld any inconsistencies.

F. Important: Check all existing membrane seams that are to be covered by walkway with rounded screwdriver and re-weld any inconsistencies before walkway installation.

3.08 TEMPORARY CUT-OFF

A. All flashings shall be installed concurrently, with the membrane in order to maintain a watertight condition as the work progresses.

B. When a break in the day's work occurs in the central area of the project install a temporary watertight seal. An 8" strip of flashing membrane shall be welded 4" to the new field membrane. The remaining 4" of flashing membrane shall be sealed to the deck and/or the substrate so that water will not be allowed to travel under the new or existing membrane. The edge of the membrane shall be sealed in a continuous heavy application of pourable sealer of 6-inch width. When work resumes, the contaminated membrane shall be removed and disposed of. None of these materials shall be reused in the new work.

C. If inclement weather occurs while a temporary water stop is in place, the Contractor shall provide the labor necessary to monitor the situation to maintain a watertight condition.

D. If any water is allowed to enter under the newly-completed system, the affected area shall be removed and replaced at the Contractor's expense.

3.09 CLEANING AND PROTECTION

A. The Contractor shall be responsible for protecting the roof from construction related damages during the Work.

B. The Contractor shall ensure trash and debris is removed from the roof daily.

C. Metal scraps, nails, screws and other sharp damaging debris shall be kept off of the roof membrane surface during construction.

D. The Contractor shall clean off/remove excess adhesive, sealant, stains and residue on the membrane and flashing surfaces.

E. The Contractor shall repair or remove and replace damaged membrane, flashings and other membrane components. Repairs shall be approved by the Engineer and be in accordance with the membrane manufacturers repair instruction to comply with the specified warranty.

F. The Contractor shall remove temporary coverings and masking protection from adjacent work areas upon completion.

END OF SECTION 075400

CBHF
Engineers, PLLC
2246 Yaupon Drive
Wilmington, NC 28401
Phone: 910.791.4000
Fax: 910.791.5266
www.cbhfengineers.com
NC# P-0506

LEGEND

V = VOICE RJ45 JACK (WHITE)
D = DATA RJ45 JACK (BLUE)
B = BLANK (WHITE)

NOTE:
1. ALL OUTLET BOXES FOR STATION OUTLETS SHALL BE 2-GANG WITH ADAPTORS TO SINGLE-GANG FACEPLATES.
2. REFER TO DIVISION 27 SPECIFICATIONS.

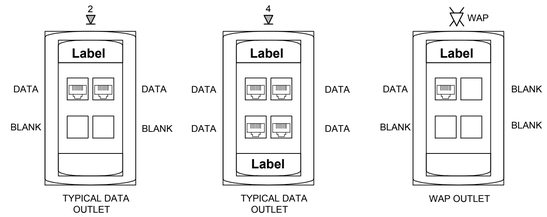

B1 TYPICAL DATA OUTLET DETAILS
NOT TO SCALE

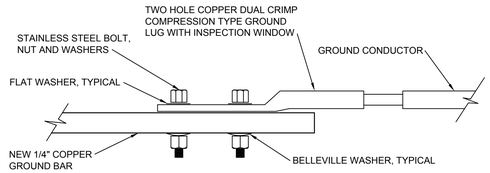

B3 TYPICAL GROUND BAR CONNECTION DETAIL
NOT TO SCALE

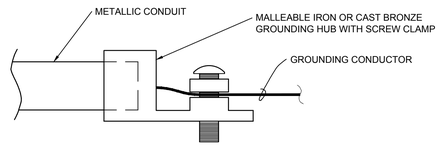

NOTE: INSTALL AT EACH END OF RACEWAY

C3 CONDUIT HUB AND GROUNDING CONDUCTOR DETAIL
NOT TO SCALE

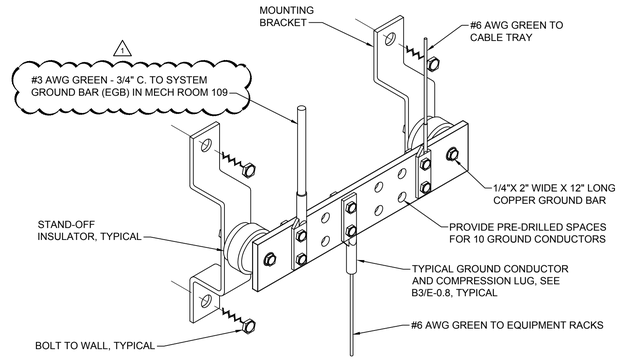

B5 TELECOMMUNICATIONS GROUND BAR DETAIL
NOT TO SCALE

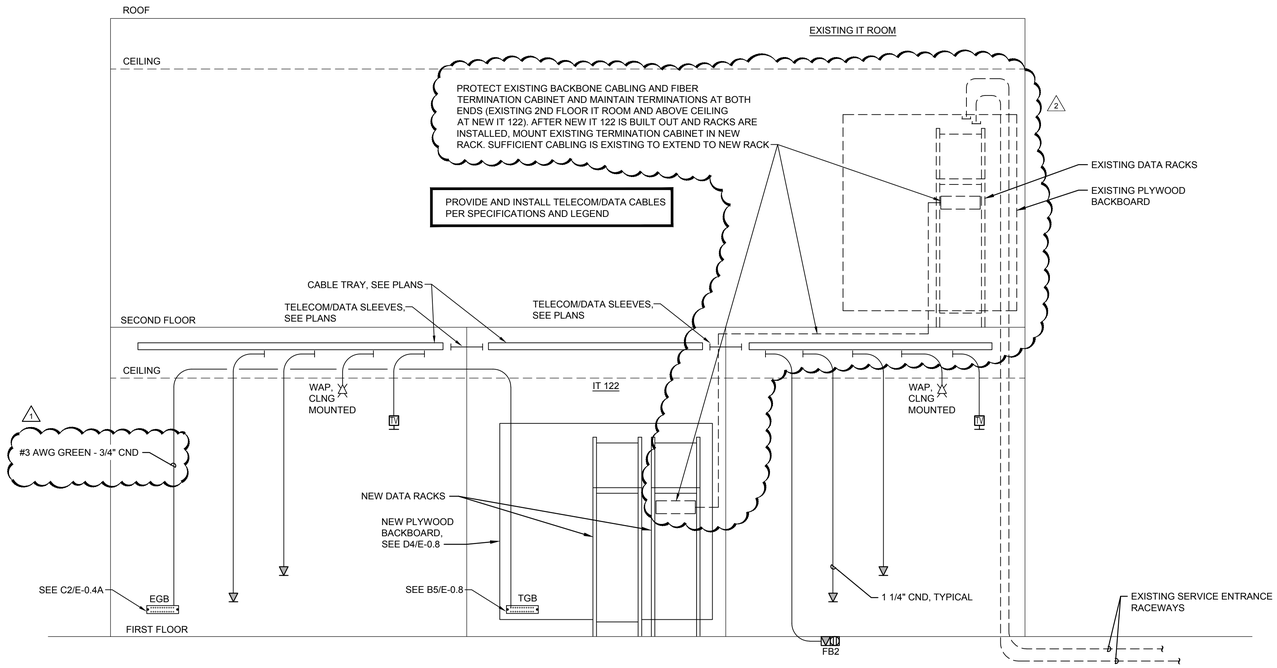

E1 TELECOMMUNICATION RISER DIAGRAM
NOT TO SCALE

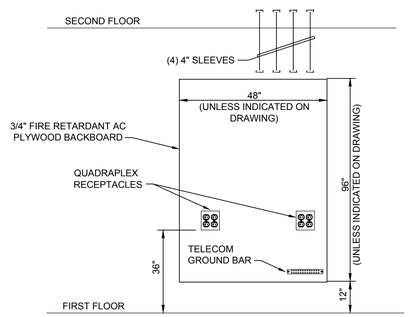

D4 TELECOMMUNICATION BACKBOARD DETAIL
NOT TO SCALE

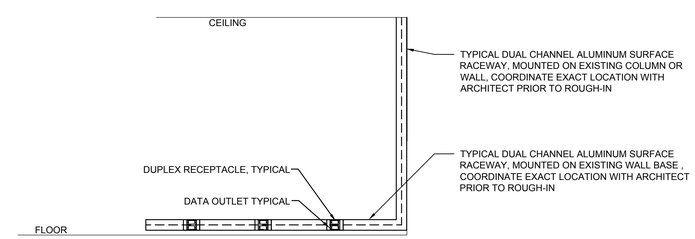

E4 TYPICAL DUAL CHANNEL SURFACE RACEWAY DETAIL
NOT TO SCALE

BOWMAN MURRAY HEMINGWAY
ARCHITECTS
514 Market Street
Wilmington, NC 28401
Tel - (910) 762-2621

SCO ID# 23-26060-01A

NORTH CAROLINA PROFESSIONAL ENGINEER SEAL 35230 JASON P. FAMIGLIETTI 01/16/2025

Coastal Carolina Community College
Learning Resource Center - First Floor Renovation
444 Western Boulevard
Jacksonville, North Carolina 28546

REV.	DATE	DESCRIPTION
1	1.9.2025	ADDENDUM #3
2	1.16.2025	ADDENDUM #4

Project Manager	Drawn By WPJ
Date 11-25-2024	Reviewed By JPF
Project ID	

Sheet Title
ELECTRICAL DETAILS

Sheet No.
Addendum #4, Attachment #5
E-0.8

CBHF Engineers, PLLC
2246 Yaupon Drive
Wilmington, NC 28401
Phone: 910.791.4000
Fax: 910.791.5266
www.cbhfengineers.com
NC# P-0506

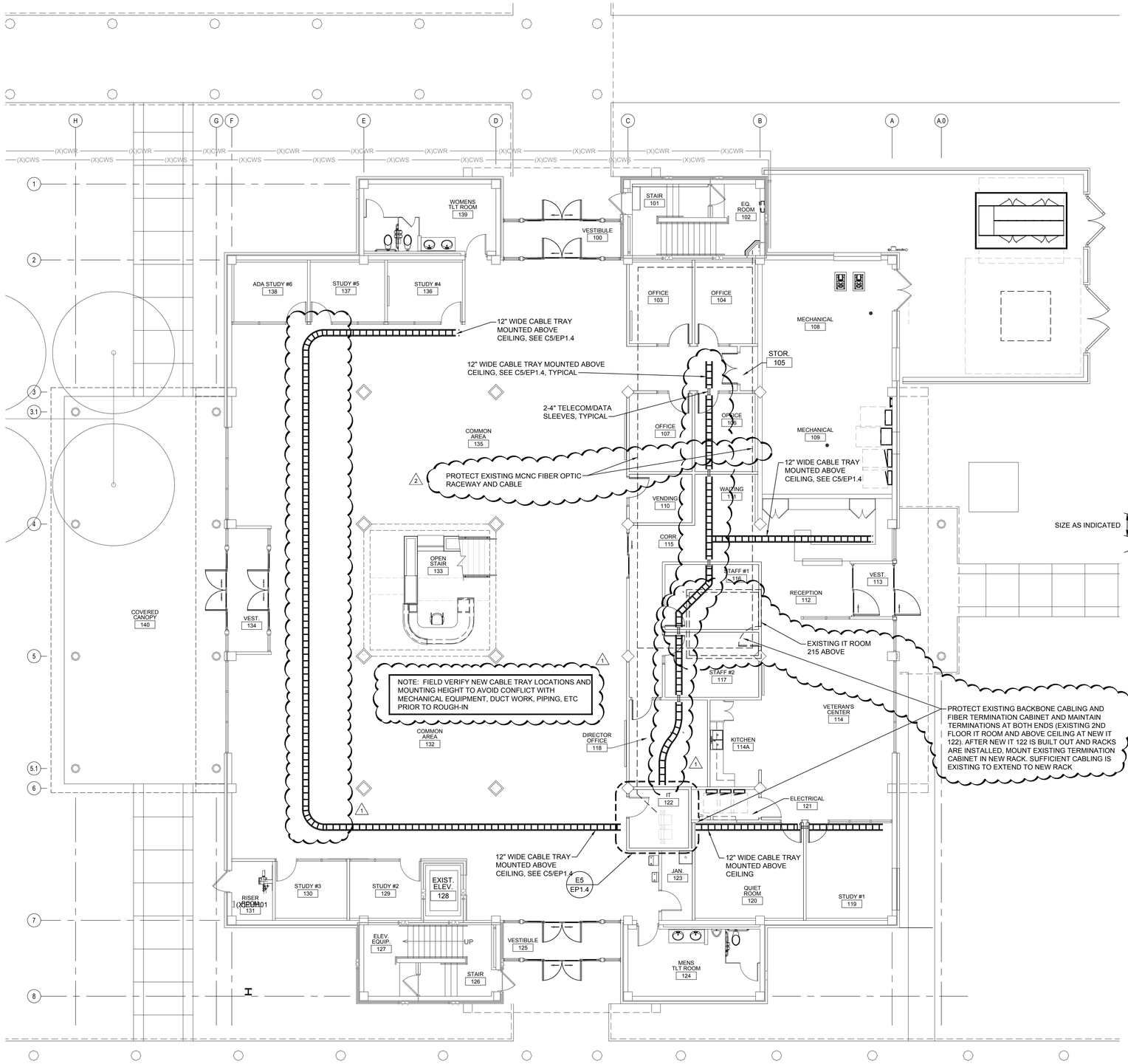

E1 FIRST FLOOR PLAN - CABLE TRAY

1/8" = 1'-0"

PLAN NORTH

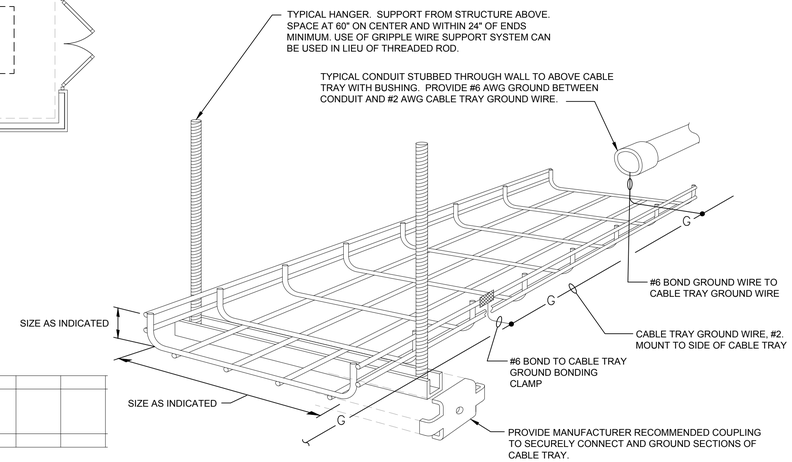

C5 CABLE TRAY DETAIL

NOT TO SCALE

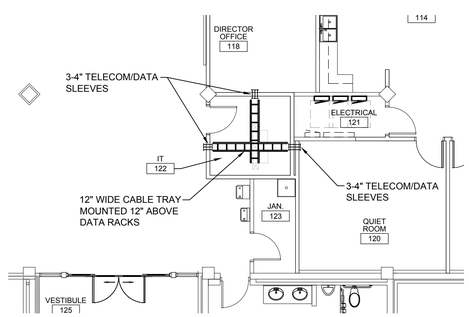

E5 IT 122 PLAN - CABLE TRAY

1/8" = 1'-0"

PLAN NORTH

WALL LEGEND	
—X—	1 HOUR RATED WALL - EXISTING

NOTE: ALL ITEMS LISTED MAY NOT BE USED IN THIS PROJECT.

BOWMAN MURRAY HEMINGWAY ARCHITECTS
514 Market Street
Wilmington, NC 28401
Tel - (910) 762-2621

SCO ID# 23-26060-01A

NORTH CAROLINA PROFESSIONAL ENGINEER SEAL 35230 JASON P. FAMIGLETTI 01/16/2025

Coastal Carolina Community College
Learning Resource Center - First Floor Renovation
444 Western Boulevard
Jacksonville, North Carolina 28546

REV.	DATE	DESCRIPTION
1	1.9.2025	ADDENDUM #3
2	1.16.2025	ADDENDUM #4

Project Manager	Drawn By WPJ
Date 11-25-2024	Reviewed By JPF
Project ID	

Sheet Title
ELECTRICAL FIRST FLOOR PLAN - CABLE TRAY

Sheet No.
Addendum #4, Attachment #6

EP1.4